Table of Contents

Made in America

Believing in American Craftsmanship

5G LTE & 5G LTE Micro ---------- Pages 2-11

OD Series- Single Bay Outdoor ---------- Pages 12-81

WOD Series- Wide Single Bay Outdoor ---------- Pages 82-151

2OD Series- Double Bay Outdoor ---------- Pages152-211

3OD- Series- Triple Bay Outdoor ---------- Pages 212-252

UL 50 OD Series- Single Bay Outdoor UL50 ---------- Pages 253-322

UL 50 WOD Series- Wide Single Bay Outdoor UL50 ---------- Pages 323-392

SOD Series- Single Door Racking Small Box ---------- Pages 393-408

SBS & SVP Series- Pole/WallSmallBox ----------Pages 409-430

Indoor Rackmount- ST Series ---------- Pages 431-458

Indoor Rackmount- SY Series ---------- Pages 459-464

ISO 9001 & 27001
Certified company

5G-LTE Enclosure

Made in America

Believing in American Craftsmanship

Why Choose the 5G-LTE Series?

The 5G-LTE series enclosure is the new evolution and standard for outdoor equipment racking applications. Being constructed of our Alumiflex® material, you'll find it noticeably lighter than steel, yet strong enough to rack even the heaviest equipment. We have taken everything that was great about the LTEE and made it better. With the 5G-LTE, you will continue to find all the standard features you need including, HVAC climate control, electrical load panel, and spool-up, side-box, but we didn't stop there. We have added extra battery tray support for the increasing needs of battery backup; reversable 19" or 23" rack rails, using our versatile "R-strut system"; improved the security and sealing ability of the 3-point locking system to give greater security and weather protection, making this a superb battery enclosure. Again, and again, DDB leads the way with advanced design and features that just work. All while being the most competitively priced and readily available enclosure on the market. Put DDB's substantial stock to work for you today. Contact our professional staff to assist you with your made-to-order solution.



Application Types

Telecommunications
Wireless/Broadband
Fiber Optics
Back Haul
Public Safety
Utility
Base Station
Military
Wi-Fi
LTEE/4G/5G



Environmental & Safety Ratings:

- ✓ NEMA 3R, IP 24 (battery compartment)
- ✓ NEMA 4, IP 66 (top compartment)
- ✓ ETL listed; Safety Requirements, UL 62368-1:2019 Ed.3, CSA C22.2

Features

0.125" Aluminum Construction
Stainless Steel External Hardware/Hinge
3 Point Lock System
Heavy Duty Out-Door Construction
Front and Rear Access
Flexible and Scalable
15 Year Warranty
Quick Shipping

Weight and Dimensions

Approximate Exterior Enclosure Dimensions:

81"H x 30"W x 34"D

Shipping Dimensions:

42"W x 48"L x 88"H – Palletized

Approximate Shipping Weight:

505 lbs.

2301 S. HWY 77 Pauls Valley, OK 73075
T: (800) 753-8459 – F: (877) 220-7236
sales@ddbunlimited.com www.ddbunlimited.com

DDB UNLIMITED®

ISO 9001 & 27001 Certified company

5G-LTE Enclosure

Made in America

Believing in American Craftsmanship

15 YEAR WARRANTY

Features

1. Alumishield
2. Front & rear 19” or 23” Reversible, Adjustable, Racking Rails, 52 RU’s
3. 4-Square Electrical Outlet
4. 3 Point Locking System
5. Powder Coat White
6. Battery Compartment
7. 4000 BTU HVAC
8. Spool-Up Box with cable passthrough holes
9. 8 Space 100 Amp LC
10. 12” copper, ground bar *(inside spool-up box)*
11. Reusable vent filters
12. 50A generator plug
13. 6, I-Hooks for lifting
14. 2, door grounding studs with copper grounding cables
15. 2, 48VDC fans with thermostat *(inside rear door)*
16. R3 Dupont insulation





Installation, operating and safety instructions can be downloaded here

Scan this code for replacement parts

Rev B

Intertek

2301 S. HWY 77 Pauls Valley, OK 73075
T: (800) 753-8459 – F: (877) 220-7236
sales@ddbunlimited.com www.ddbunlimited.com

WEB DRAWING (NOT FOR FABRICATION)

REVISIONS		
REV.	DESCRIPTION	DATE
A	WEBSITE DRAWING FOR 5G-LTE	1/9/2020
B	UPDATED WITH N28 PENTAIR A/C	5/12/2020

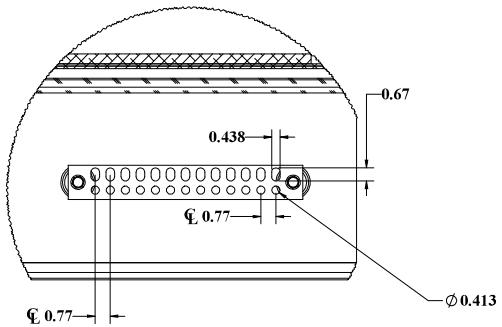

DETAIL D
SCALE 1 : 3

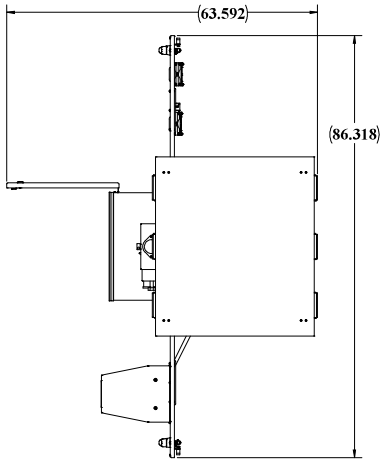

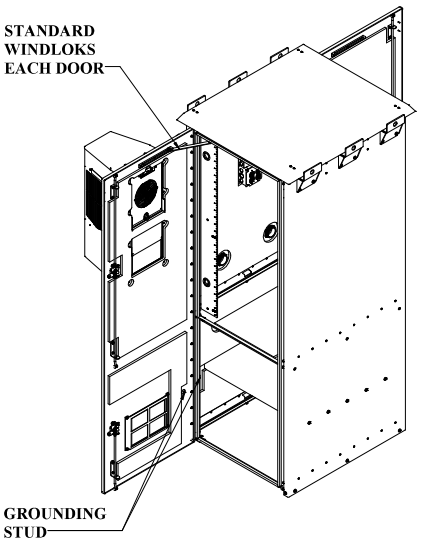

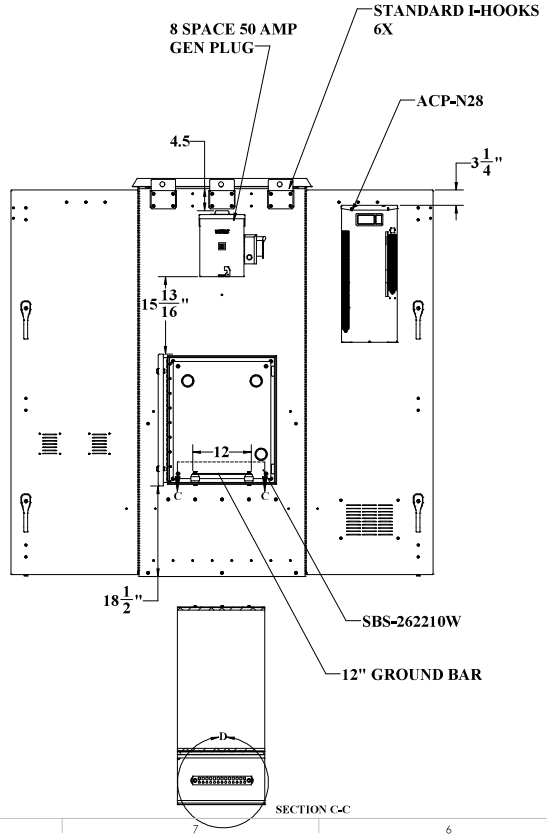

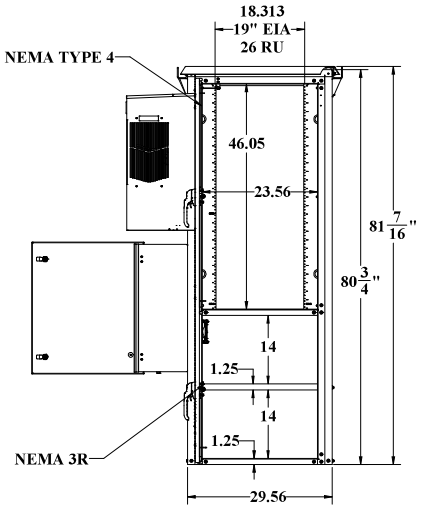

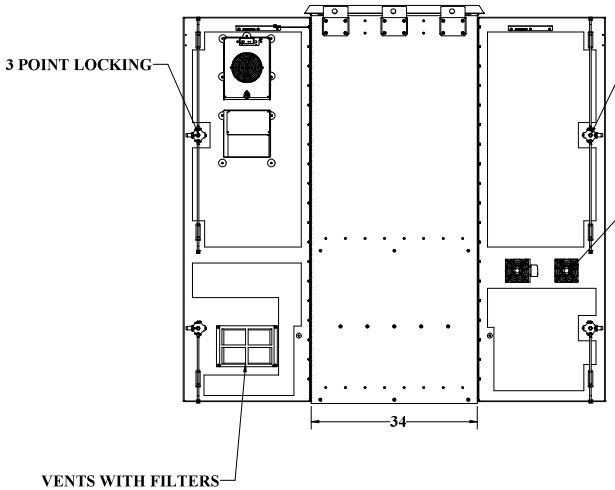

NEMA 4 (Top Compartment)(Unlisted)
NEMA 3R (Battery Compartment)(Unlisted)
ETL listed to UL Standard 60950-1/CSA 22.2C

WEB DRAWING (NOT FOR FABRICATION)

UNLESS OTHERWISE SPECIFIED:		NAME	DATE	DDB Unlimited Inc.			
DIMENSIONS ARE IN INCHES	Model by:	DDB		5G-LTE			
ANGULAR: MACH ± BEND ± TWO PLACE DECIMAL ± THREE PLACE DECIMAL ±	Drawn by:	Marvin5	01/09/20	5G-LTE			
ALL EDGES BREAK ●	Sales Rel	Don Campbell		SIZE	Cage Code:	DWG. NO.:	REV
MATERIAL: 5052-H32-0.125" ASTM-B209-04	Q.A. Appr.	Matty	05/12/20	D	3B5Y5	02200	B
PAINT: WHITE-SAND TEXTURE POLY 87749	Prod.Mgr.	ClarkK	05/12/20	SCALE: 1:12	WEIGHT: 473 lbs.		SHEET 1 OF 3
DO NOT SCALE DRAWING	Control Number:						

DDB FORM: 7.1-2 REV:F 05/02/19

UNCLASSIFIED PUBLIC

File Location: [DDB]/EPDM Vault1
C:\DDB\Drawing Requests\Customers\DDB WEB DWG\LTE6-Family\5G-LTE-02134\

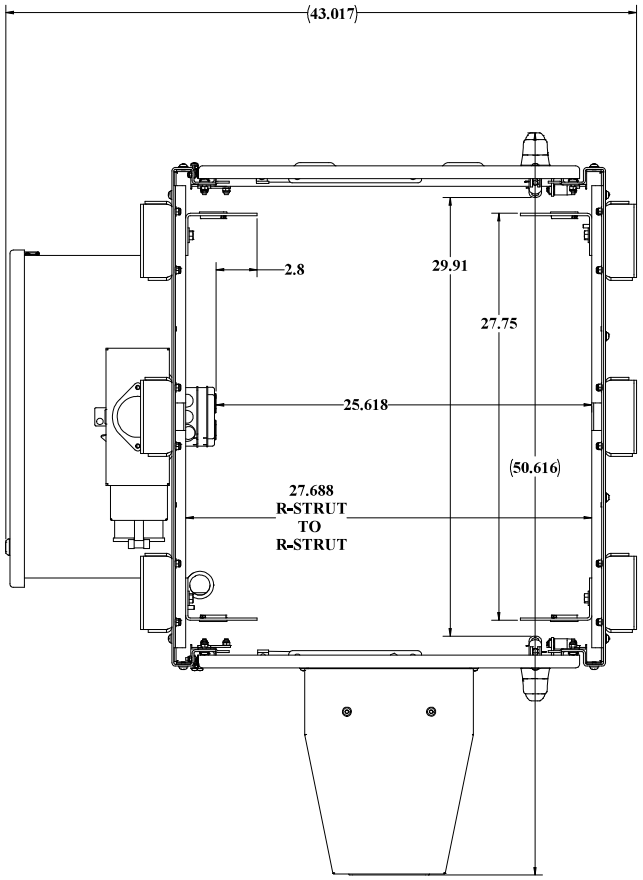

TOP VIEW ALUMASHIELD AND CEILING HIDDEN

UNLESS OTHERWISE SPECIFIED:	DDB Unlimited Inc.			
DIMENSIONS ARE IN INCHES ANGULAR: ±1° FRACTIONAL/NO DECIMAL: ±0.1250 TWO PLACE DECIMAL: ±0.0500 THREE PLACE DECIMAL: ±0.0100 ALL HOLES ±0.0050	5G-LTE-Doors Closed 5G-LTE-Doors Closed5G-LTE-Doors Closed			
	SIZE	Cage Code:	DWG. NO.:	REV
	D	3B5Y5	02200	B
MATERIAL: 5052-H32 .125" ASTM-B-209-04	SCALE: 1:12	WEIGHT:		SHEET 2 OF 3
PAINT: WHITE GLOSS TEXTURE PLN 437-349				
DO NOT SCALE DRAWING				

DDB FORM 7.1 REV K 08/02/17

UNCLASSIFIED - PUBLIC

File Location: (DDB) EPDM Vault:
C:\DDB\Drawing Requests\Customers\DDB WEB DWG\LTEE-Family\5G-LTE-02134\

WEB DRAWING (NOT FOR FABRICATION)

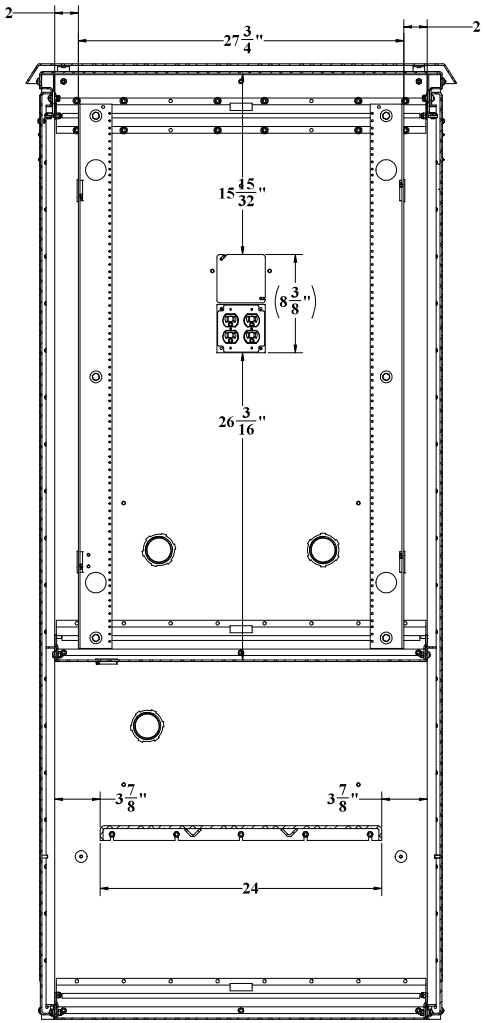

SECTION B-B
SCALE 1 : 5

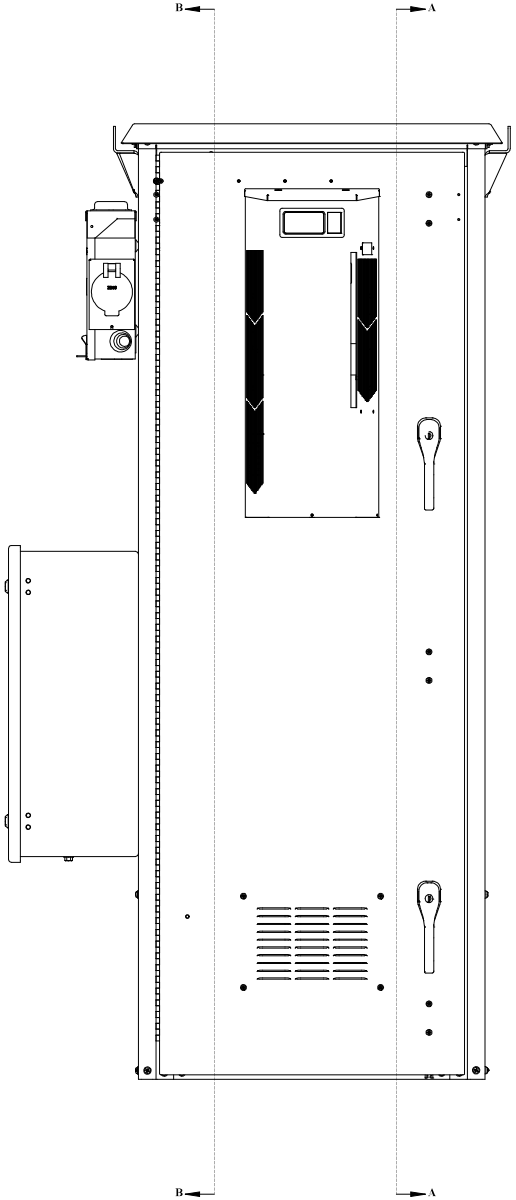

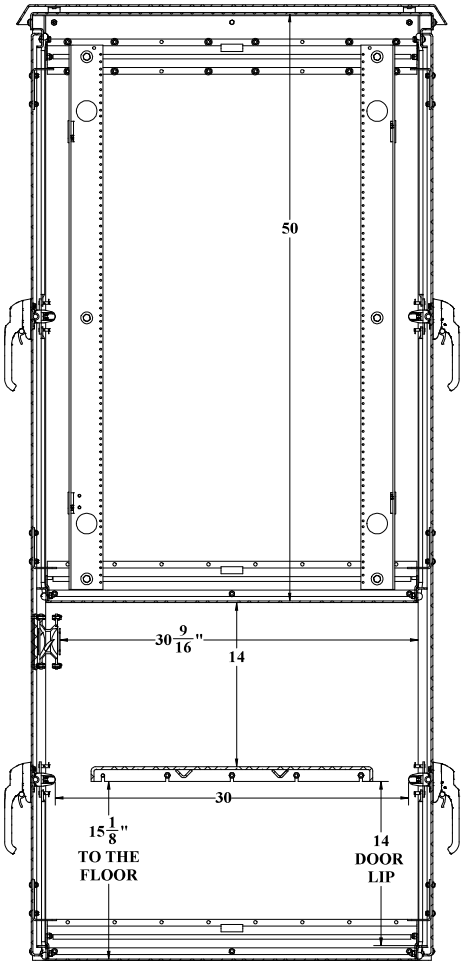

SECTION A-A
SCALE 1 : 5

WEB DRAWING (NOT FOR FABRICATION)

UNLESS OTHERWISE SPECIFIED: DIMENSIONS ARE IN INCHES ANGULAR: MACH ±1° BEND ±1° TWO PLACE DECIMAL ± 0.010 THREE PLACE DECIMAL ± 0.005 ALL EDGES BREAK MATERIAL FINISH BEAD BLAST		NAME	DATE
	Model by:	DDB	
	Drawn by:	Marvin8	01/09/20
	Sales Rel:	Jon Campbell	
	Q.A. Appr.:	Matty	05/12/20
	Prod.Mgr.:	Clark	05/12/20
MATERIAL: 5052-H32-0.125" ASTM-B209-04			
PAINT: WHITE-15-500 TEXTURE FLX-07549			
DO NOT SCALE DRAWING	Control Number:		

DDB Unlimited Inc.			
5G-LTE 5G-LTE-Doors Closed			
SIZE	Cage Code:	DWG. NO.:	REV
D	3B5Y5	02200	B
SCALE: 1:1e	WEIGHT:	SHEET 3 OF 3	

DDB FORM: 7.1-2 REV:F 05/02/19

UNCLASSIFIED PUBLIC

File Location: [DDB]/EPDM Vault/
C:\DDB\Drawing Requests\Customers\DDB WEB DWG\LTE6-Family\5G-LTE-02134\

DDB UNLIMITED®

An ISO 9001 Certified company

5G-LTE Micro

Made in America

Believing in American Craftsmanship

15 YEAR WARRANTY

Why Choose the 5G-LTE Series?

The 5G-LTE series enclosure is the new evolution and standard for outdoor equipment racking applications. Being constructed of our Alumiflex® material, you'll find it noticeably lighter than steel, yet strong enough to rack even the heaviest equipment. We have taken everything that was great about the LTEE and made it better. With the 5G-LTE Micro, you will continue to find all the standard features you need including HVAC climate control, electrical load panel and side spool cabinet, but we didn't stop there. We have reversable 19' or 23" rack rails using our versatile "R-strut system" w/ improved the security and sealing ability of the 3-point locking system w/ door alarms to give greater security and weather protection, also including a light bar making this a superb battery enclosure. Again, and again, DDB leads the way with advanced design and features that just work. All while being the most competitively priced and readily available enclosure on the market. Put DDB's substantial stock to work for you today. Contact our professional staff to assist you with your made-to-order solution.





Features

0.125" Aluminum Construction

Stainless Steel External Hardware/Hinge

3 Point Lock System

Heavy Duty Out-Door Construction

Front and Rear Access

Flexible and Scalable

15 Year Warranty

Quick Shipping

Application Types

Telecommunications
Wireless/Broadband
Fiber Optics
Back Haul
Public Safety
Utility
Base Station
Military
Wi-Fi
LTEE/4G/5G

Industry Standards:

NEMA 4 (Unlisted)

ETL listed to UL Standard 60950-1/CSA 22.2C

Weight and Dimensions

Approximate Exterior Enclosure Dimensions:

51"H x 30"W x 30"D

Shipping Dimensions:

48"W x 42"L x 56"H - Palletized

Approximate Shipping Weight:

365 lbs.

2301 S. HWY 77 Pauls Valley, OK 73075
T: (800) 753-8459 – F: (877) 220-7236
sales@ddbunlimited.com www.ddbunlimited.com

DDB UNLIMITED®

An ISO 9001 Certified company

5G-LTE Micro

Made in America

Believing in American Craftsmanship

15 YEAR WARRANTY



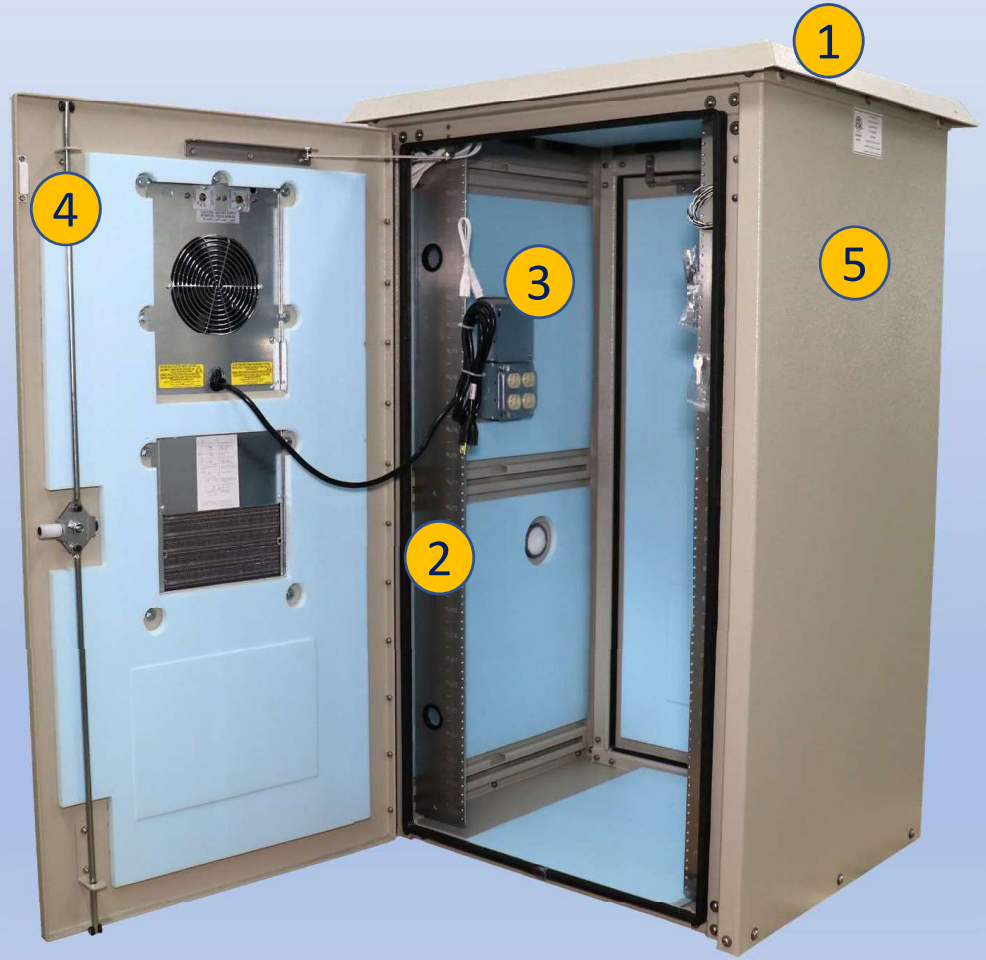

Features

1. Solar Shield (Alumishield®)
2. 1 Set - 19” or 23” Reversible Adjustable Racking Rails
3. Electrical Outlet
4. 3 Point Locking System
5. Powder Coat Cream
6. 4000 BTU HVAC
7. Spool-Up Box w/ Pass Through Holes
8. 8 Space 100 Amp LC w/ 50 Amp Gen Plug

2301 S. HWY 77 Pauls Valley, OK 73075
T: (800) 753-8459 – F: (877) 220-7236
sales@ddbunlimited.com www.ddbunlimited.com

WEB DRAWING (NOT FOR FABRICATION)

REVISIONS		
REV.	DESCRIPTION	DATE
A	WOD-50DXC BUILD ASSEMBLY	06/05/2020

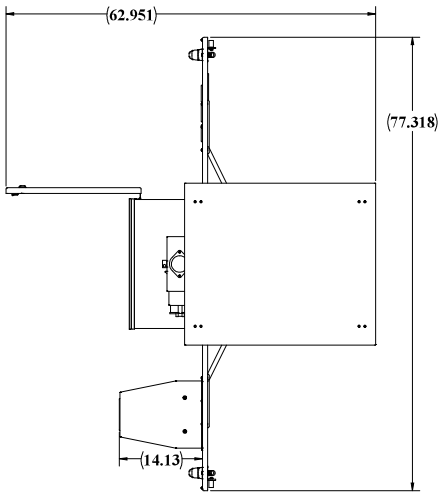

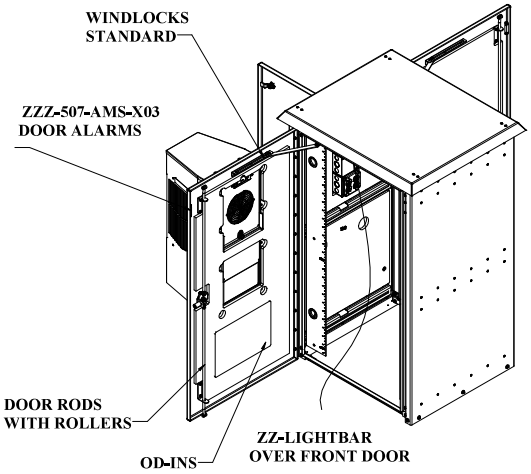

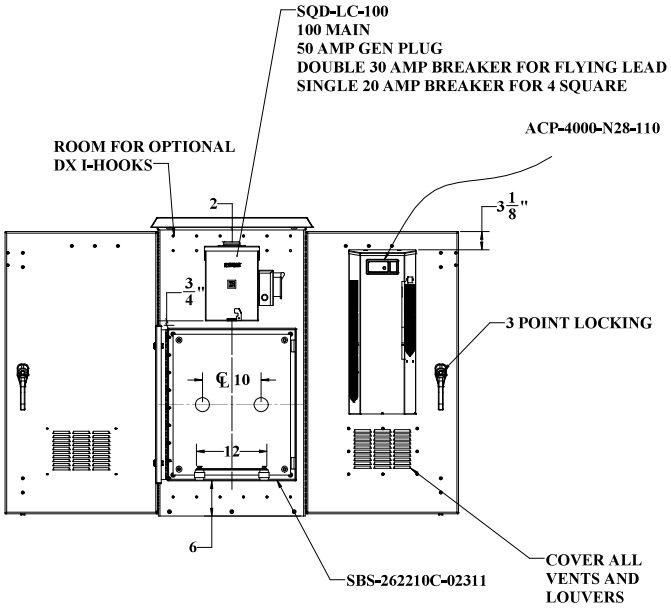

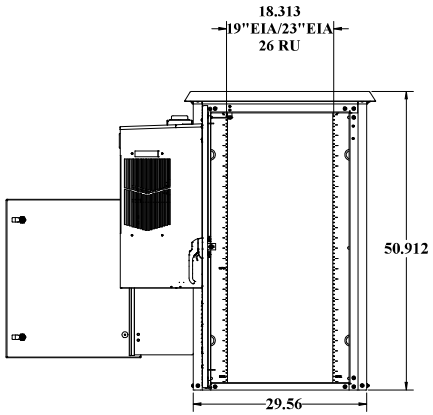

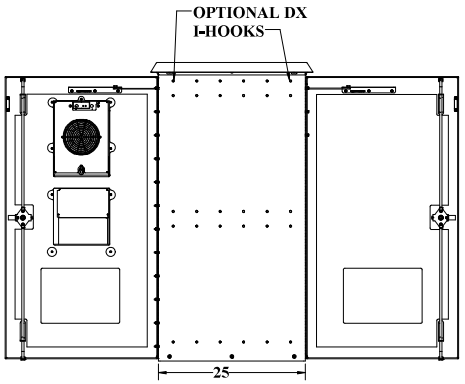

WEB DRAWING (NOT FOR FABRICATION)

NEMA TYPE 4

IN-HOUSE

BUILD ASSEMBLY MADE FROM WOD-50DXC

UNLESS OTHERWISE SPECIFIED:		NAME	DATE	DDB Unlimited Inc.			
DIMENSIONS ARE IN INCHES	Model by:	DDB		SC-LTE-MICRO			
ANGULAR ±1°	Drawn by:	Marvin5	06/05/20	WOD-50DXC-LHD-V28			
TWO PLACE DECIMAL ± 0.010	Sales Rel	Non Comply					
THREE PLACE DECIMAL ± 0.005	Q.A. Appr.	troy	06/08/20	SIZE	Cage Code:	DWG. NO.:	REV.
ALL HOLES ø MAX Ø MATERIAL FINISH BREAK ± 1/64	Prod.Mgr.	ClarkK	06/08/20	D	385Y5	02322	A
MATERIAL: 5052-H32-0.125" ASTM-B209-04							
PAINT: DO NOT SCALE DRAWING	Control Number:			SCALE: 1:20	WEIGHT: 283 LBS.		SHEET 1 OF 3

DDB FORM 7.1-2 REV.F 05/02/19

UNCLASSIFIED PUBLIC

File Location: (DDB)\PDM Vault\
C:\DDB\Drawing Requests\Customers\DDB WEB DWG\LTE6-Family\SC-LTE-MICRO\

WEB DRAWING (NOT FOR FABRICATION)

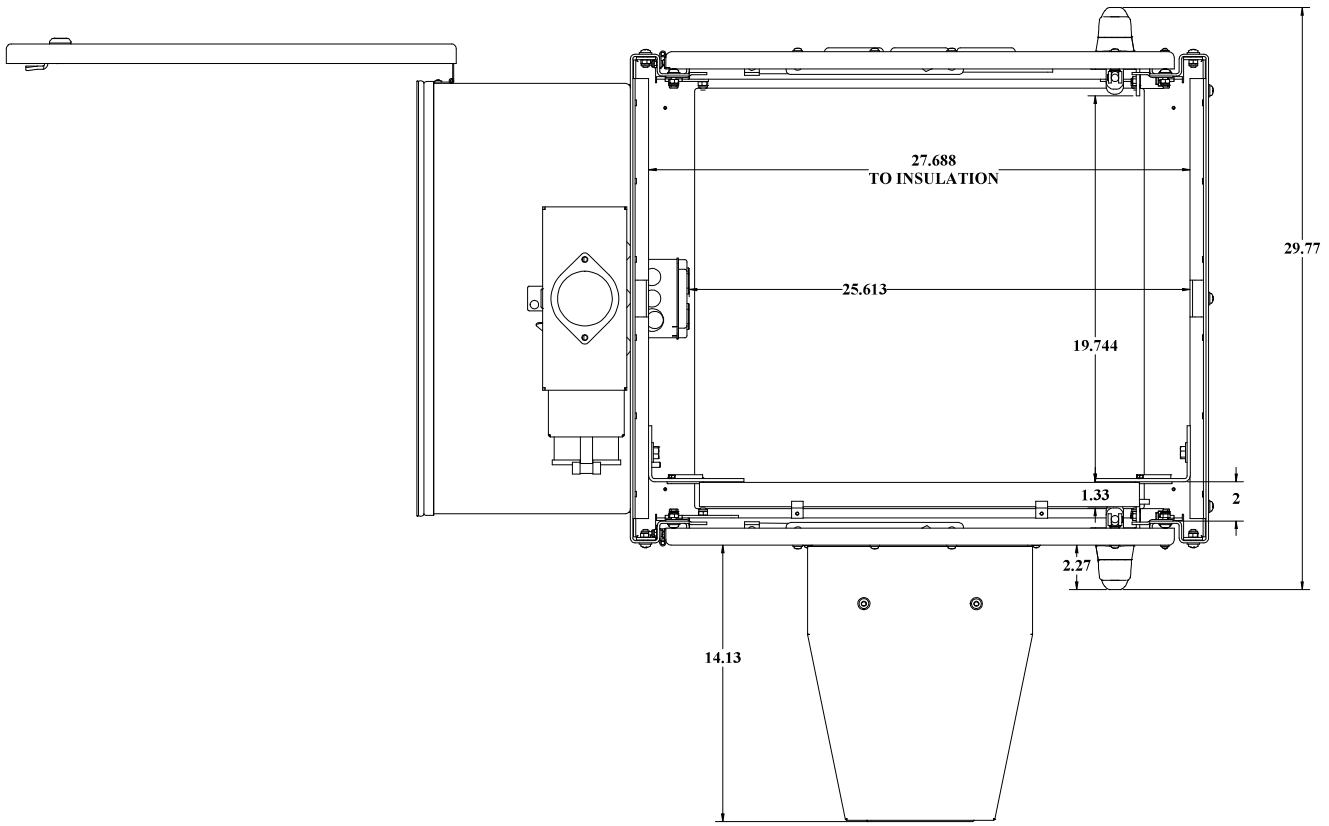

DDB FORM: 7-1-2 REV:F 05/02/19

WEB DRAWING (NOT FOR FABRICATION)

UNLESS OTHERWISE SPECIFIED:		NAME	DATE	DDB Unlimited Inc.			
DIMENSIONS ARE IN INCHES	Model by:	DDB		SC-LITE-MICRO			
ANGULAR: MACH ± .5° BEND ± .5° TWO PLACE DECIMAL ± .010 THREE PLACE DECIMAL ± .005	Drawn by:	Marvin8	06/05/20	WOD-50DX-LHD-028			
ALL HOLES #1.005 ± MATERIAL THICKNESS ± .139	Sales Rel:	Jon Campbell		SIZE	Cage Code:	DWG. NO.:	REV
	Q.A. Appr.:	troy	06/08/20	D	385Y5	02322	A
MATERIAL: 5052-H32-0.125" ASTM-B209-04	Prod.Mgr.:	ClarkK	06/08/20				
PAINT: DIAMOND VOGEL HI-FIX GLOSS TEXTURE CAT#:	DO NOT SCALE DRAWING	Control Number:		SCALE: 1:20	WEIGHT:	SHEET 2 OF 3	

UNCLASSIFIED PUBLIC

File Location: (DDB)[PDM Vault]
C:\DDB\Drawing Requests\Customers\DDB WEB DWG\LITE6-Family\SC-LITE-MICRO\

WEB DRAWING (NOT FOR FABRICATION)

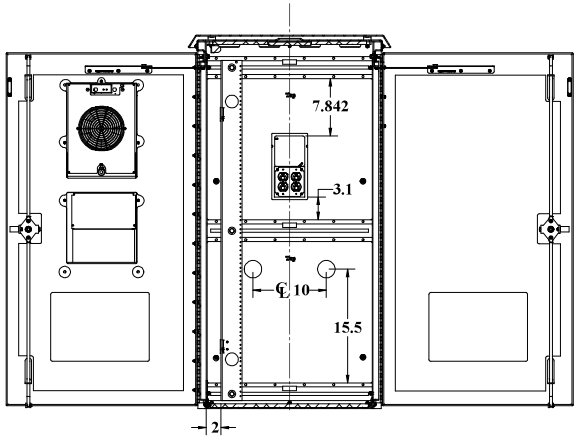

SECTION B-B
SCALE 1 : 8

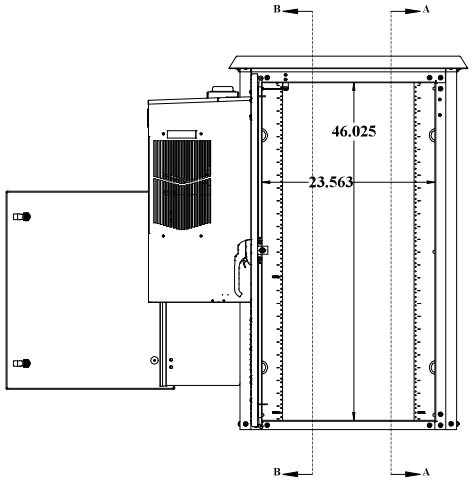

3/8" DOOR BULB GASKET IS NOT SHOWN IN THIS VIEW

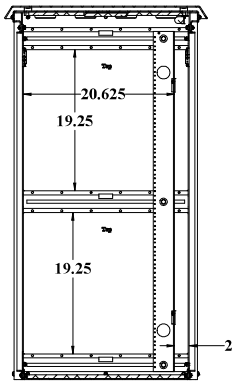

SECTION A-A
SCALE 1 : 8

DDB FORM: 7-1-2 REV:F 05/02/19

WEB DRAWING (NOT FOR FABRICATION)

UNLESS OTHERWISE SPECIFIED:		NAME	DATE	DDB Unlimited Inc.			
DIMENSIONS ARE IN INCHES	Model by:	DDB		SC-LTE-MICRO			
ANGULAR: MACH ± BEND ± TWO PLACE DECIMAL ± THREE PLACE DECIMAL ±	Drawn by:	Marvin8	06/05/20	WOD-50DX-LHD-V28			
ALL HOLES ø MATERIAL: FINISH:	Sales Rel:	Jon Campbell		SIZE	Cage Code:	DWG. NO.:	REV
MATERIAL: 5052-H32-0.125" ASTM-B209-04	Q.A. Appr.:	troy	06/08/20	D	3B5Y5	02322	A
PAINT: DIAMOND VOGEL HI-FIL GLOSS TEXTURE (5400)	Prod.Mgr.:	ClarkK	06/08/20	SCALE: 1:20	WEIGHT:	SHEET 3 OF 3	
DO NOT SCALE DRAWING	Control Number:						

UNCLASSIFIED PUBLIC

File Location: (DDB)\PDM Vault\
C:\DDB\Drawing Requests\Customers\DDB WEB DWG\LTE5-Family\5C-LTE-MICRO\

DDB UNLIMITED®

An ISO 9001/27001 Certified company

OD Series

OD-16DXC

Made in America

Believing in American Craftsmanship

15 YEAR WARRANTY

Why Choose the OD Series?

The OD series of enclosures are the ultimate choice for your outdoor racking requirements. Being made of our own rugged Alumiflex®, you'll find it noticeably lighter than steel, yet strong enough to rack even the heaviest equipment. When choosing the OD series, you have handpicked the highest value in American construction. The OD-16DXC includes the standard features you have come to expect with DDB, incorporating the versatile rail strut (R-Strut) system for adjustable racking, the security of a 3- point locking system and our patented Alumishield® solar cap to manage heat loads. For those who need more than just our standard enclosure, DDB can also make a truly customized solution with our many available options including HVAC, providing a climate-controlled environment for any electronic equipment, electrical load panels and cable entry solutions to name a few. All of this comes together to create an enclosure able to meet all of the unique need's customers have been seeking. DDB offers a state-of-the-art design, a competitive price, benchmark lead times and a guaranteed delivery, all backed up with an industry leading 15-year warranty on every enclosure. Put DDB's substantial stock to work for you today. Contact our professional staff to assist you with your made-to-order solution.



Application Types

Telecommunications
Wireless/Broadband
Fiber Optics
Back Haul
Small Cell/DAS
Public Safety
Utility
Base Station
Military
Trailer-Based Communications
Wi-Fi
LTEE/4G/5G



Environmental & Safety Ratings:

- ✓ NEMA 3R (shown above)
- ✓ NEMA 4 and 4X configurable (not shown)
- ✓ OD-16 Series, ETL environmentally listed to UL 50/50E, Type 4's Available here: https://www.ddbunlimited.com/new-ul-50e-listed/
- ✓ ETL listed; Safety Requirements, UL 62368-1:2019 Ed.3, CSA C22.2

Features

0.125" Aluminum Construction
Stainless Steel External Hardware/Hinge
3 Point Lock System
Heavy Duty Out-Door Construction
Front and Rear Access
Custom Colors Available
Cream Powder-Coat standard color
Flexible and Scalable
15 Year Warranty
Quick Shipping

Weight and Dimensions

Approximate Exterior Enclosure Dimensions:
18"H x 28"W x 30"D

Shipping Dimensions:
32"W x 42"L - Palletized

Approximate Shipping Weight:
107 lbs.

2301 S. HWY 77 Pauls Valley, OK 73075
T: (800) 753-8459 – F: (877) 220-7236
sales@ddbunlimited.com www.ddbunlimited.com

DDB UNLIMITED®

An ISO 9001/27001 Certified company

OD Series

OD-16DXC

Made in America

Believing in American Craftsmanship

15 YEAR WARRANTY

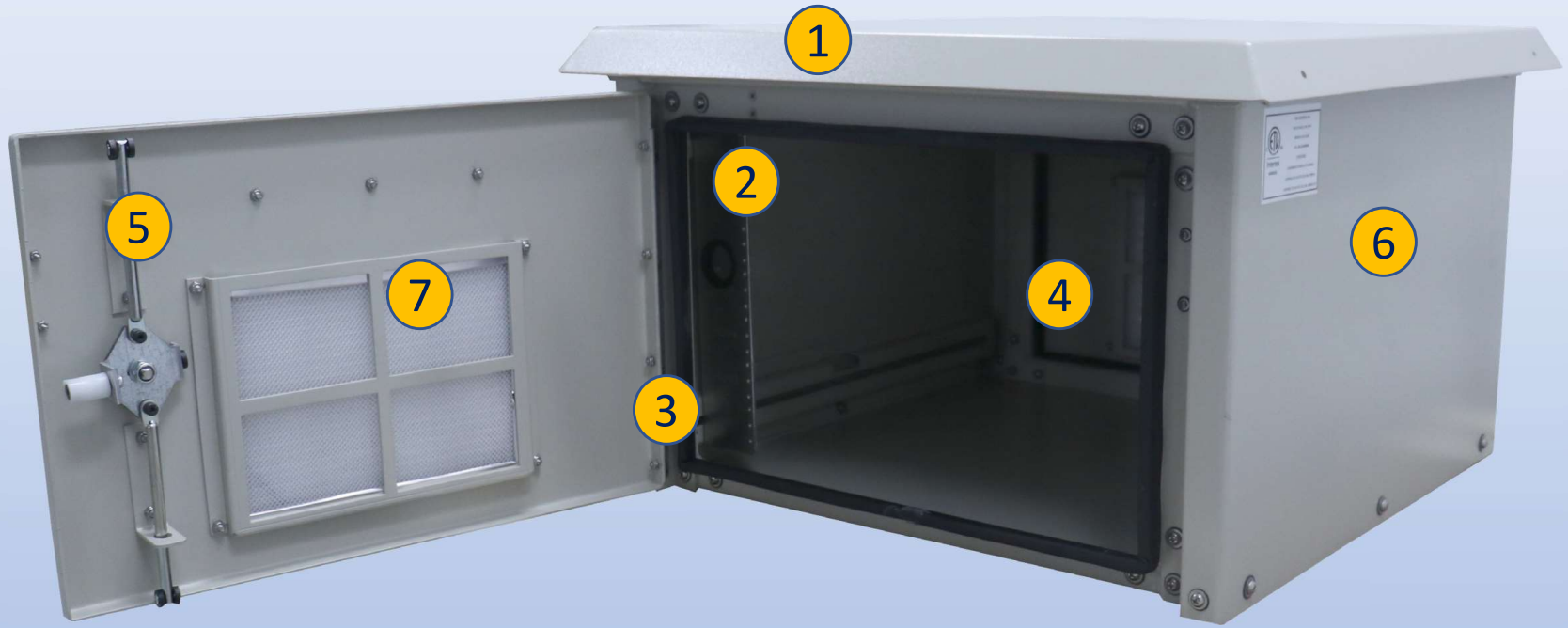

Features

1. Solar Shield (Alumishield)
2. 19” Adjustable Racking Rails, 7 RU’s
3. Stainless steel door hinge
4. Rear Access Door
5. 3 Point Locking System
6. Powder-Coat Cream
7. Reusable Vent Filters

ETL LISTED c US Intertek

Installation, operating and safety instructions can be downloaded here

Scan this code for replacement parts

2301 S. HWY 77 Pauls Valley, OK 73075
T: (800) 753-8459 – F: (877) 220-7236
sales@ddbunlimited.com www.ddbunlimited.com

Rev C

WEB DRAWING (NOT FOR FABRICATION)

REVISIONS		
REV.	DESCRIPTION	DATE
A	Web Drawing per DR-00419	11/10/2011
B	Update DWG reflecting new components and new DWG template.	4/29/2014
C	UPDATED WITH 2019 FORMAT	2/11/2019
D	UPDATED DRAWING WITH DOOR ROD WITH ROLLERS PER DR-02251	4/1/2020

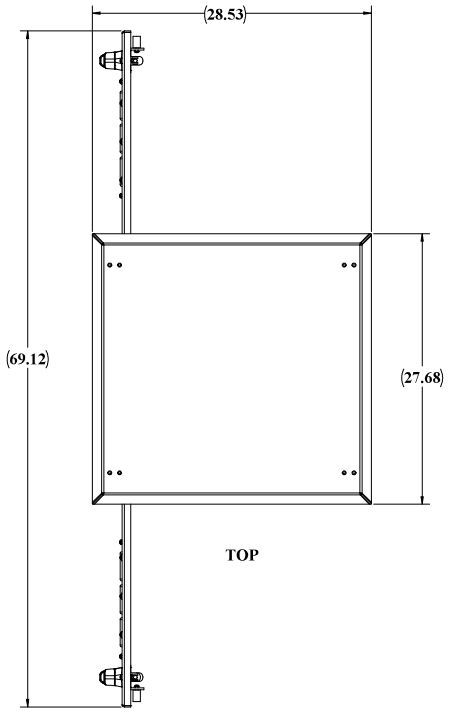

TOP

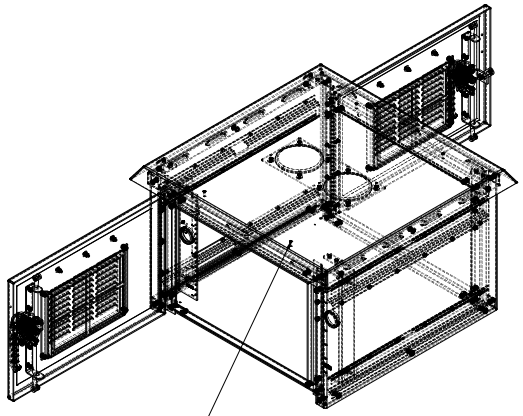

STANDOFFS STANDARD
FOR OPTIONAL LIGHTING
OVER EACH DOOR.

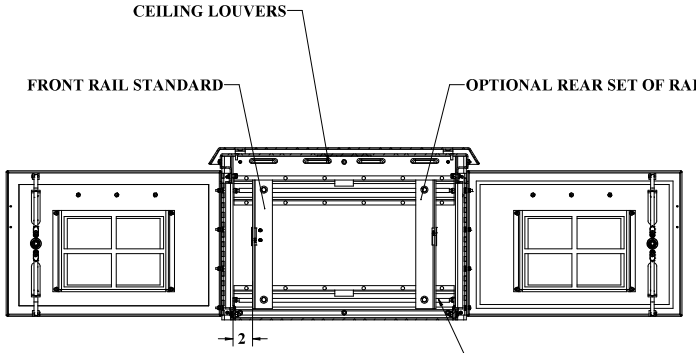

SECTION A-A
SCALE 1 : 6

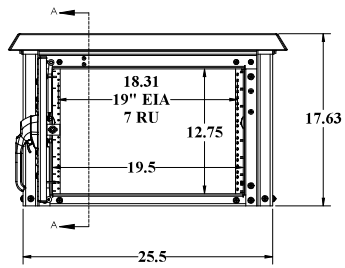

FRONT

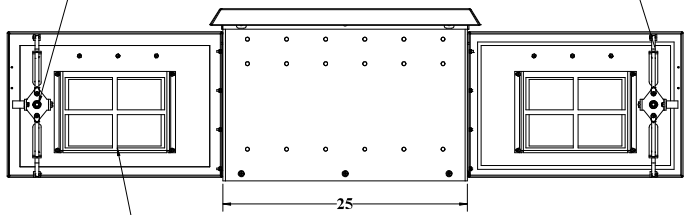

RIGHT SIDE

DDB FORM: 7-1-2 REV:F 05/02/19

WEB DRAWING (NOT FOR FABRICATION)

UNLESS OTHERWISE SPECIFIED:		NAME	DATE	DDB Unlimited Inc.			
DIMENSIONS ARE IN INCHES	Model by:	DDB	11/10/2011	OD Family Enclosures			
ANGULAR: MACH ± BEND ± TWO PLACE DECIMAL ± THREE PLACE DECIMAL ±	Drawn by:	Marvin S	02/11/19	Enclosure, OD, 16, DX			
ALL EDGES BREAK ● MATERIAL / FINISH BURR 0.127	Sales Rep.:	Bryan C	11/15/11	SIZE	Cage Code:	DWG. NO.:	REV
MATERIAL: 5052-H32-0.125-ASTM-B209-04	Q.A. Appr.:	sheldon	04/01/20	D	3S5Y5	00419	D
PAINT:	Prod.Mgr.:	ClarkK	04/09/20	SCALE: 1:32	WEIGHT: 70 lbs.		SHEET 1 OF 3
DO NOT SCALE DRAWING	Control Number:						

UNCLASSIFIED PUBLIC

File Location: (DDB)\EPDM Vault\
C:\DDB\Drawing Requests\Customers\DDB WEB DWG\OD Family WEB\DR-00419 (OD-16DX

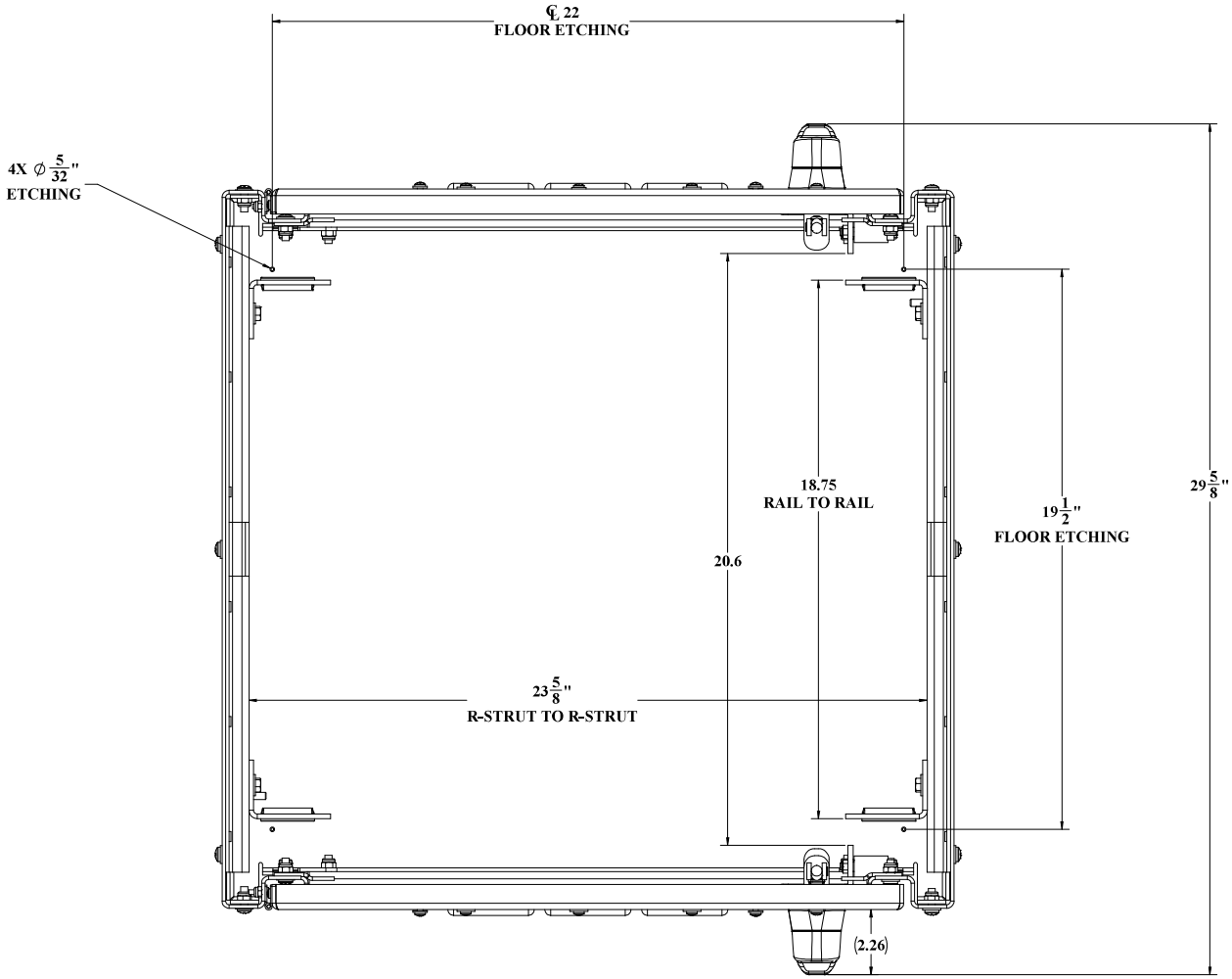

TOP VIEW CEILING AND ALUMASHIELD NOT SHOWN

DDB FORM 7.1-7 REV.K 08/02/17

UNLESS OTHERWISE SPECIFIED:	DDB Unlimited Inc.		
DIMENSIONS ARE IN INCHES ANGULAR: ±1° FRACTIONAL/NO DECIMAL: ±0.1250 TWO PLACE DECIMAL: ±0.0500 THREE PLACE DECIMAL: ±0.0250 ALL HOLES ±0.0030	DX Closed OD Family Enclosure, DX, ClosedDX Closed		
	SIZE: D	Cage Code: 385Y5	DWG. NO.: 00419	REV: D
MATERIAL: 5052-H32-0.125-ASTM-B209-04	SCALE: 1:32	WEIGHT:	SHEET 2 OF 3
PAINT: DIAMOND VOGEL SEMI-GLOSS TEXTURE 15-6020	DO NOT SCALE DRAWING		

UNCLASSIFIED PUBLIC
THE INFORMATION CONTAINED IN THIS DRAWING IS THE SOLE PROPERTY OF DDB Unlimited, INC. ANY REPRODUCTION IN PART OR AS A WHOLE WITHOUT THE WRITTEN PERMISSION OF DDB Unlimited, INC. IS PROHIBITED.

File Location: (DDB)(EPDM Vault)
C:\DDB\Drawing Requests\Customers\DDB WEB DWG\OD Family WEB\DR-00419 (OD-16DX)\

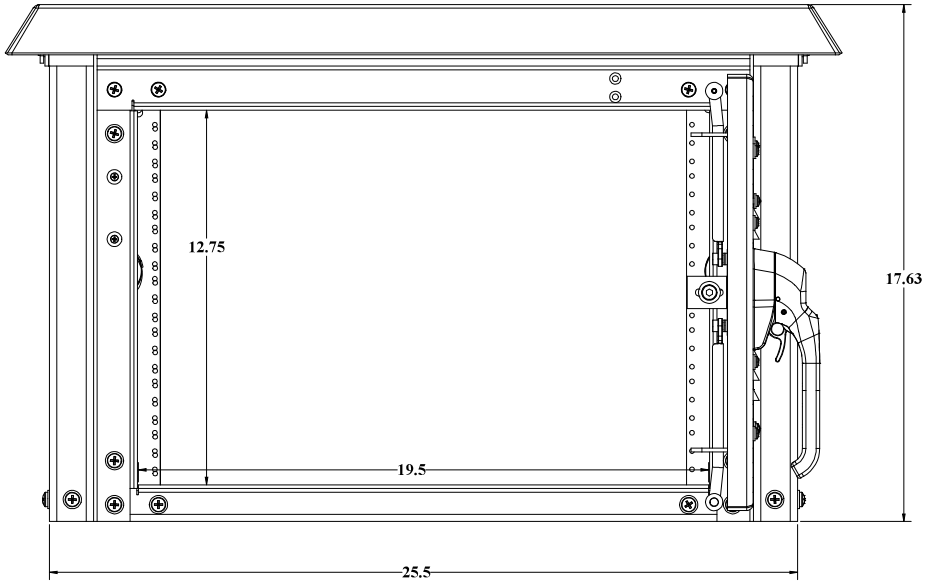

BACK VIEW GASKET NOT SHOWN

UNLESS OTHERWISE SPECIFIED:	DDB Unlimited Inc.		
DIMENSIONS ARE IN INCHES ANGULAR: ±1° FRACTIONAL/NO DECIMAL: ±0.1250 TWO PLACE DECIMAL: ± 0.0500 THREE PLACE DECIMAL: ± 0.0250 ALL HOLES ±0.0076	OD-16DX Enclosure, OD, 16, DXOD-16DX		
	SIZE: D	Cage Code: 385Y5	DWG. NO.: 00419 REV: D
MATERIAL: 5052-H32-0.125-ASTM-B209-04	SCALE: 1:32	WEIGHT: .	SHEET 3 OF 3
PAINT: DIAMOND VOGEL, BLUE, GLOSS TEXTURE 14450			
DO NOT SCALE DRAWING			

DDB FORM 7.1-REV.K 08/02/17

UNCLASSIFIED PUBLIC
THE INFORMATION CONTAINED IN THIS DRAWING IS THE SOLE PROPERTY OF DDB Unlimited, INC. ANY
REPRODUCTION IN PART OR AS A WHOLE WITHOUT THE WRITTEN PERMISSION OF DDB Unlimited, INC. IS PROHIBITED.

File Location: (DDB)(EPDM Vault)
C:\DDB\Drawing Requests\Customers\DDB WEB DWG\OD Family WEB\DR-00419 (OD-16DX)\

ISO 9001 & 27001
Certified company

OD Series

OD-16DDC

Made in America

Believing in American Craftsmanship

Why Choose the OD Series?

The OD series of enclosures are the ultimate choice for your outdoor racking requirements. Being made of our own rugged Alumiflex®, you'll find it noticeably lighter than steel, yet strong enough to rack even the heaviest equipment. When choosing the OD series, you have handpicked the highest value in American construction. The OD-16DDC includes the standard features you have come to expect with DDB, incorporating the versatile rail strut (R-Strut) system for adjustable racking, the security of a 3- point locking system and our patented Alumishield® solar cap to manage heat loads. For those who need more than just our standard enclosure, DDB can also make a truly customized solution with our many available options including HVAC, providing a climate-controlled environment for any electronic equipment, electrical load center panels and cable entry solutions to name a few. All of this comes together to create an enclosure able to meet all of the unique need's customers have been seeking. DDB offers a state-of-the-art design, a competitive price, benchmark lead times and a guaranteed delivery, all backed up with an industry leading 15-year warranty on every enclosure. Put DDB's substantial stock to work for you today. Contact our professional staff to assist you with your made-to-order solution.



Features

0.125" Aluminum Construction

Stainless Steel External Hardware/Hinge

3 Point Lock System

Heavy Duty Out-Door Construction

Front and Rear Access

Custom Colors Available

Cream Powder-Coat standard color

Flexible and Scalable

15 Year Warranty

Quick Shipping

Application Types

Telecommunications
Wireless/Broadband
Fiber Optics
Back Haul
Small Cell/DAS
Public Safety
Utility
Base Station
Military
Trailer-Based Communications
Wi-Fi
LTEE/4G/5G



Environmental & Safety Ratings:

- ✓ NEMA 3R (shown above)
- ✓ NEMA 4 and 4X configurable (not shown)
- ✓ OD-16 Series, ETL environmentally listed to UL 50/50E, Type 4's Available here: https://www.ddbunlimited.com/new-ul-50e-listed/
- ✓ ETL listed; Safety Requirements, UL 62368-1:2019 Ed.3, CSA C22.2

Weight and Dimensions

Approximate Exterior Enclosure Dimensions:

18"H x 28"W x 39"D

Shipping Dimensions:

32"W x 42"L - Palletized

Approximate Shipping Weight:

124 lbs.

2301 S. HWY 77 Pauls Valley, OK 73075
T: (800) 753-8459 – F: (877) 220-7236
sales@ddbunlimited.com www.ddbunlimited.com

ISO 9001 & 27001
Certified company

OD Series

OD-16DDC

Made in America

Believing in American Craftsmanship

15 YEAR WARRANTY

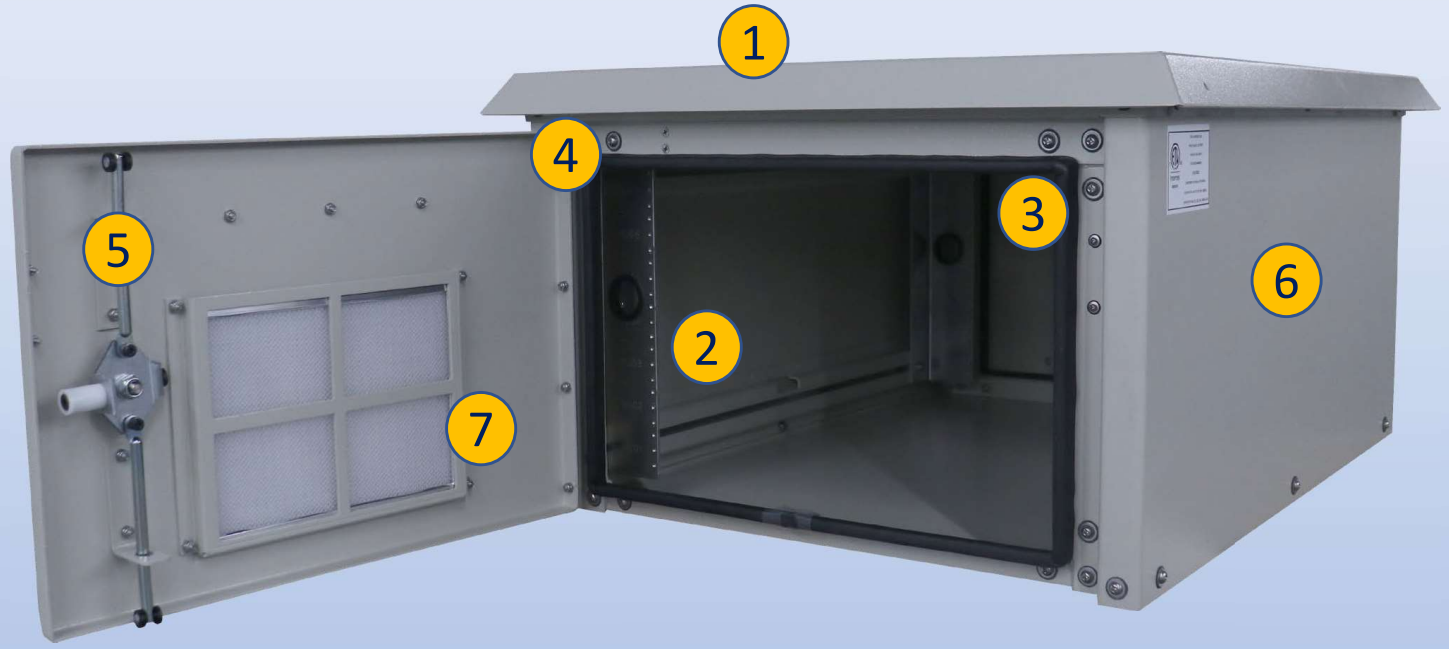

Features

1. Alumishield
2. Front and Rear 19” Adjustable Racking Rails, 14 RU’s
3. Rear Access Door
4. Stainless Steel Door Hinge
5. 3 Point Locking System
6. Powder coat cream
7. Reusable Vent Filters

c ETL US LISTED Intertek

Installation, operating and safety instructions can be downloaded here

Scan this code for replacement parts

2301 S. HWY 77 Pauls Valley, OK 73075
T: (800) 753-8459 – F: (877) 220-7236
sales@ddbunlimited.com www.ddbunlimited.com

Rev D

WEB DRAWING (NOT FOR FABRICATION)

REVISIONS		
REV.	DESCRIPTION	DATE
A	Web Drawing per DR-00420	11/14/2011
B	UPDATE TO REFLECT NEW COMPONENTS AND NEW DWG TEMPLATE	5/8/2014
C	UPDATED WITH 2019 FORMAT	2/11/2019
D	UPDATED DRAWING WITH DOOR RODS WITH ROLLERS PER DR-02252	3/26/2020

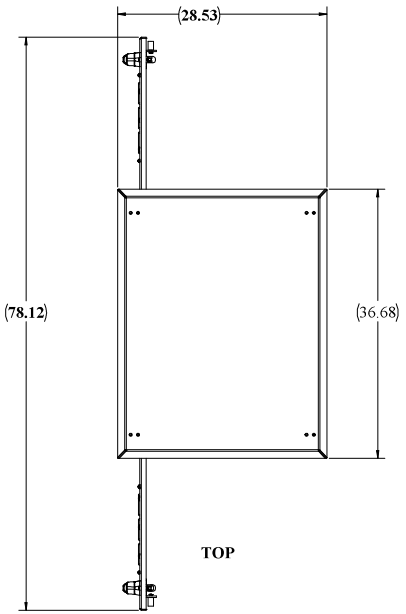

TOP

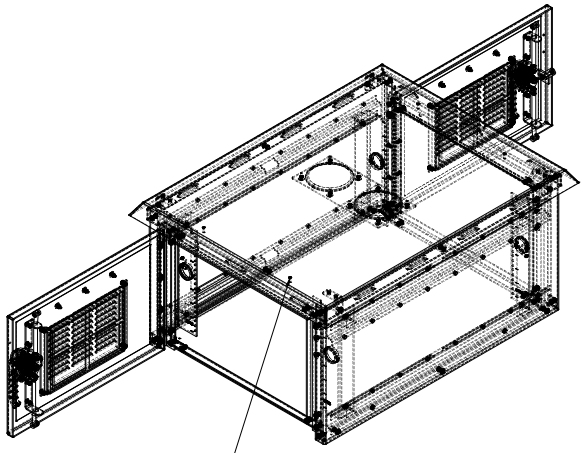

STANDOFFS STANDARD
FOR OPTIONAL LIGHTING
OVER EACH DOOR

DOO RODS WITH ROLLERS

3 POINT LOCKING
EACH DOOR

FRONT AND REAR RAIL
STANDARD ON DD

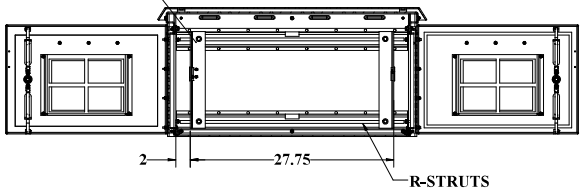

R-STRUTS
FOR RAIL ADJUSTMENTS

SECTION A-A
SCALE 1 : 8

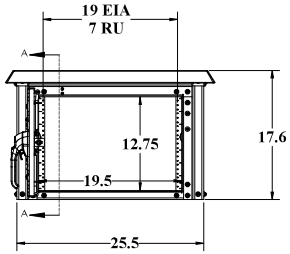

FRONT

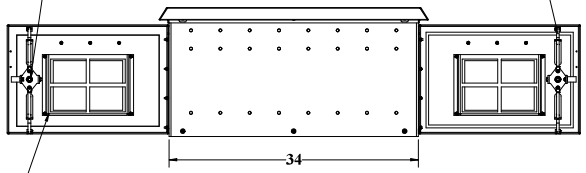

2 FILTERED VENTS

RIGHT SIDE

WEB DRAWING (NOT FOR FABRICATION)

UNLESS OTHERWISE SPECIFIED:		NAME	DATE	DDB Unlimited Inc.			
DIMENSIONS ARE IN INCHES	Modeled by:	DDB	11/14/2011	OD Family Enclosures			
ANGULAR: MACH ± BEND ± TWO PLACE DECIMAL ± THREE PLACE DECIMAL ±	Drawn by:	Marvin S	02/22/19	Enclosure, OD, 16, DD			
ALL HOLES ARE PLATING, MATERIAL, FINISH BEFORE	Sales Rep.:	Bryan C	11/15/11	SIZE	Cage Code:	DWG. NO.:	REV
	Q.A. Appr.:	tony	03/27/20	D	3S5Y5	00420	D
MATERIAL: 5052-H32/0.125" ASTM-B209-04	Prod.Mgr.:	ClarkK	03/27/20				
PAINT: DO NOT SCALE DRAWING	Control Number:			SCALE: 1:32	WEIGHT: 84 lbs.		SHEET 1 OF 3

DDB FORM 7.1-2 REV.F 05/02/19

UNCLASSIFIED PUBLIC

File Location: (DDB)\EPDM Vault\
C:\DDB\Drawing Requests\Customers\DDB WEB DWG\OD Family WEB\DR-00420 (OD-16DD

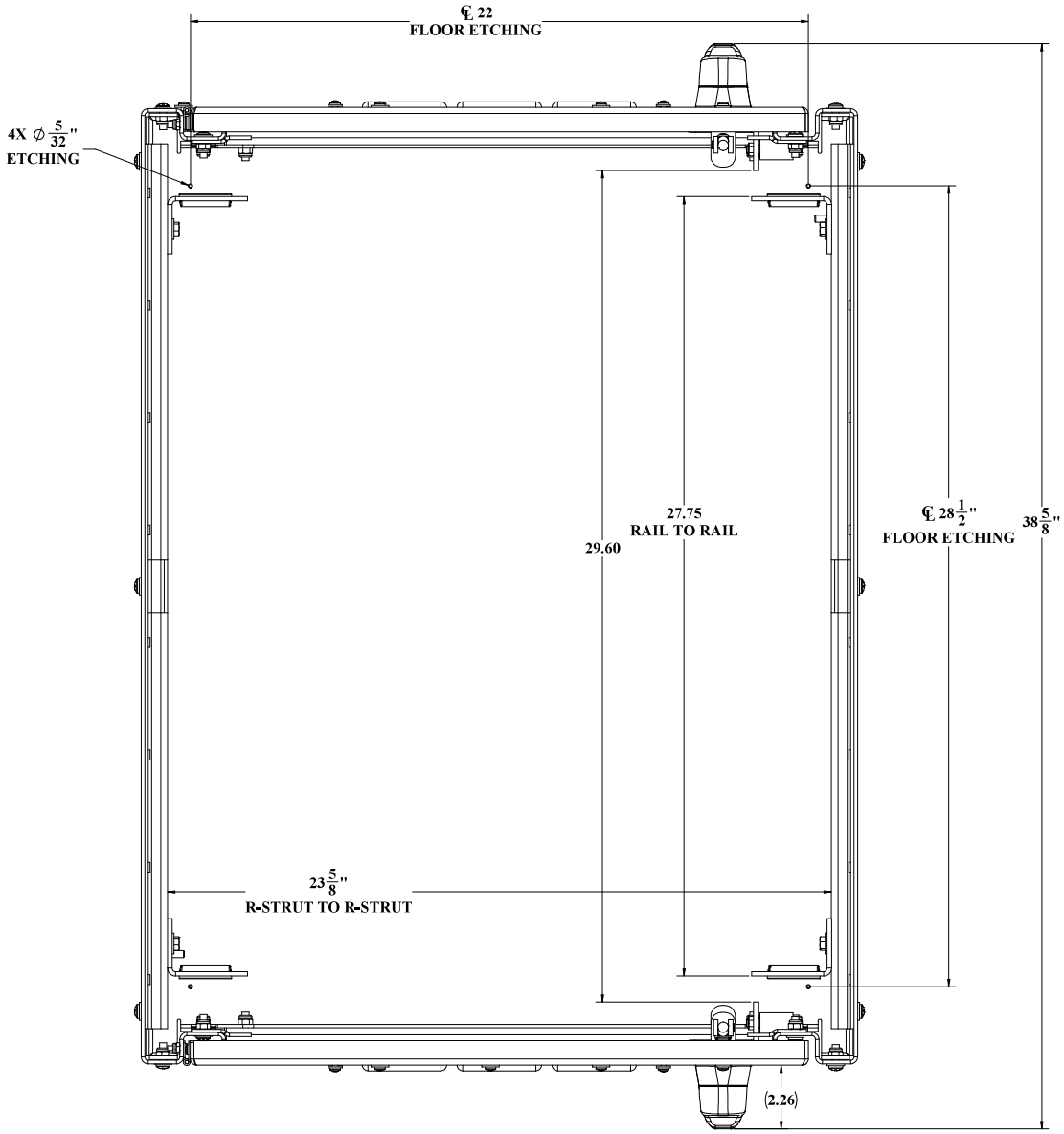

TOP VIEW CEILING AND ALUMASHIELD NOT SHOWN

UNLESS OTHERWISE SPECIFIED:	DDB Unlimited Inc.		
DIMENSIONS ARE IN INCHES ANGULAR: ±1° FRACTIONAL/NO DECIMAL: ±0.1250 TWO PLACE DECIMAL: ± 0.0500 THREE PLACE DECIMAL: ± 0.0250 ALL HOLES ±0.0076	DD Closed OD Family Enclosure, DD, ClosedDD Closed		
	SIZE: D	Cage Code: 385Y5	DWG. NO.: 00420 REV: D
MATERIAL: 5052-H32/5XX-0.125" ASTM-B209-04			
PAINT:	SCALE: 1:32	WEIGHT:	SHEET 2 OF 3
DO NOT SCALE DRAWING			

UNCLASSIFIED PUBLIC
THE INFORMATION CONTAINED IN THIS DRAWING IS THE SOLE PROPERTY OF DDB Unlimited, INC. ANY
REPRODUCTION IN PART OR AS A WHOLE WITHOUT THE WRITTEN PERMISSION OF DDB Unlimited, INC. IS PROHIBITED.

File Location: (DDB)(EPDM Vault)
C:\DDB\Drawing Requests\Customers\DDB WEB DWG\OD Family WEB\DR-00420 (OD-16DD)\

DDB FORM 7.1-REV.K 08/02/17

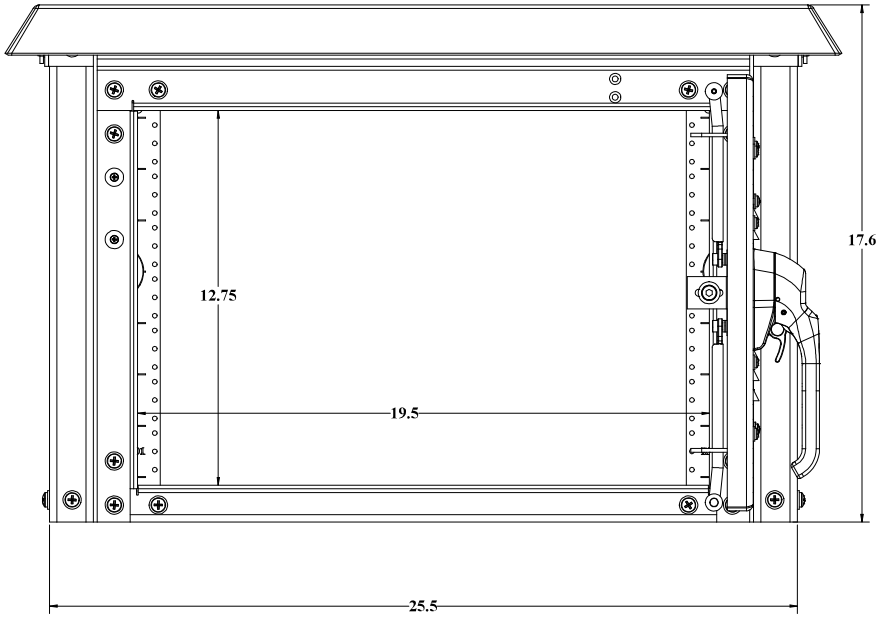

BACK VIEW GASKET NOW SHOWN

UNLESS OTHERWISE SPECIFIED:	DDB Unlimited Inc.		
DIMENSIONS ARE IN INCHES ANGULAR: ±1° FRACTIONAL/NO DECIMAL: ±0.1250 TWO PLACE DECIMAL: ± 0.0100 THREE PLACE DECIMAL: ± 0.0050 ALL HOLES ±0.0010	OD-16DD Enclosure, OD, 16, DDOD-16DD		
	SIZE: D	Cage Code: 3S5Y5	DWG. NO.: 00420 REV: D
MATERIAL: 5052-H32/X.125" ASTM-B209-04	SCALE: 1:32	WEIGHT:	SHEET 3 OF 3
PAINT: RADIOWAVE SMOKE, SEMI-GLOSS TEXTURE 34939			
DO NOT SCALE DRAWING			

DDB FORM 7.1-REV.K 08/02/17

UNCLASSIFIED PUBLIC
THE INFORMATION CONTAINED IN THIS DRAWING IS THE SOLE PROPERTY OF DDB Unlimited, INC. ANY
REPRODUCTION IN PART OR AS A WHOLE WITHOUT THE WRITTEN PERMISSION OF DDB Unlimited, INC. IS PROHIBITED.

File Location: (DDB)(EPDM Vault)
C:\DDB\Drawing Requests\Customers\DDB WEB DWG\OD Family WEB\DR-00420 (OD-16DD)\

An ISO 9001/27001 Certified company

OD Series

OD-30DXC

Made in America

Believing in American Craftsmanship

15 YEAR WARRANTY

Why Choose the OD Series?

The OD series of enclosures are the ultimate choice for your outdoor racking requirements. Being made of our own rugged Alumiflex®, you'll find it noticeably lighter than steel, yet strong enough to rack even the heaviest equipment. When choosing the OD series, you have handpicked the highest value in American construction. The OD-30DXC includes the standard features you have come to expect with DDB, incorporating the versatile rail strut (R-Strut) system for adjustable racking, the security of a 3- point locking system and our patented Alumishield® solar cap to manage heat loads. For those who need more than just our standard enclosure, DDB can also make a truly customized solution with our many available options including HVAC, providing a climate-controlled environment for any electronic equipment, electrical load panels and cable entry solutions to name a few. All of this comes together to create an enclosure able to meet all of the unique needs your customers have been seeking. DDB offers a state-of-the-art design, a competitive price, benchmark lead times and a guaranteed delivery, all backed up with an industry leading 15-year warranty on every enclosure. Put DDB's substantial stock to work for you today. Contact our professional staff to assist you with your made-to-order solution.



Features

0.125" Aluminum Construction

Stainless Steel External Hardware/Hinge

3 Point Lock System

Heavy Duty Out-Door Construction

Front and Rear Access

Custom Colors Available

Cream Powder-Coat in Stock

Flexible and Scalable

15 Year Warranty

Quick Shipping

Application Types

Telecommunications
Wireless/Broadband
Fiber Optics
Back Haul
Small Cell/DAS
Public Safety
Utility
Base Station
Military
Trailer-Based Communications
Wi-Fi
LTEE/4G/5G



Industry Standards:

NEMA 3R as shown

NEMA 4 and 4X configurable (unlisted to environmental rating)

OD Series Listed to UL 50/50E Type 4 Available

ETL listed to UL Standard 60950-1/CSA 22.2C

Weight and Dimensions

Approximate Exterior Enclosure Dimensions:

32”H x 28”W x 30”D

Shipping Dimensions:

32”W x 42”L - Palletized

Approximate Shipping Weight:

126 lbs.

2301 S. HWY 77 Pauls Valley, OK 73075
T: (800) 753-8459 – F: (877) 220-7236
sales@ddbunlimited.com www.ddbunlimited.com

DDB UNLIMITED®

An ISO 9001/27001 Certified company

OD Series

OD-30DXC

Made in America

Believing in American Craftsmanship

15 YEAR WARRANTY

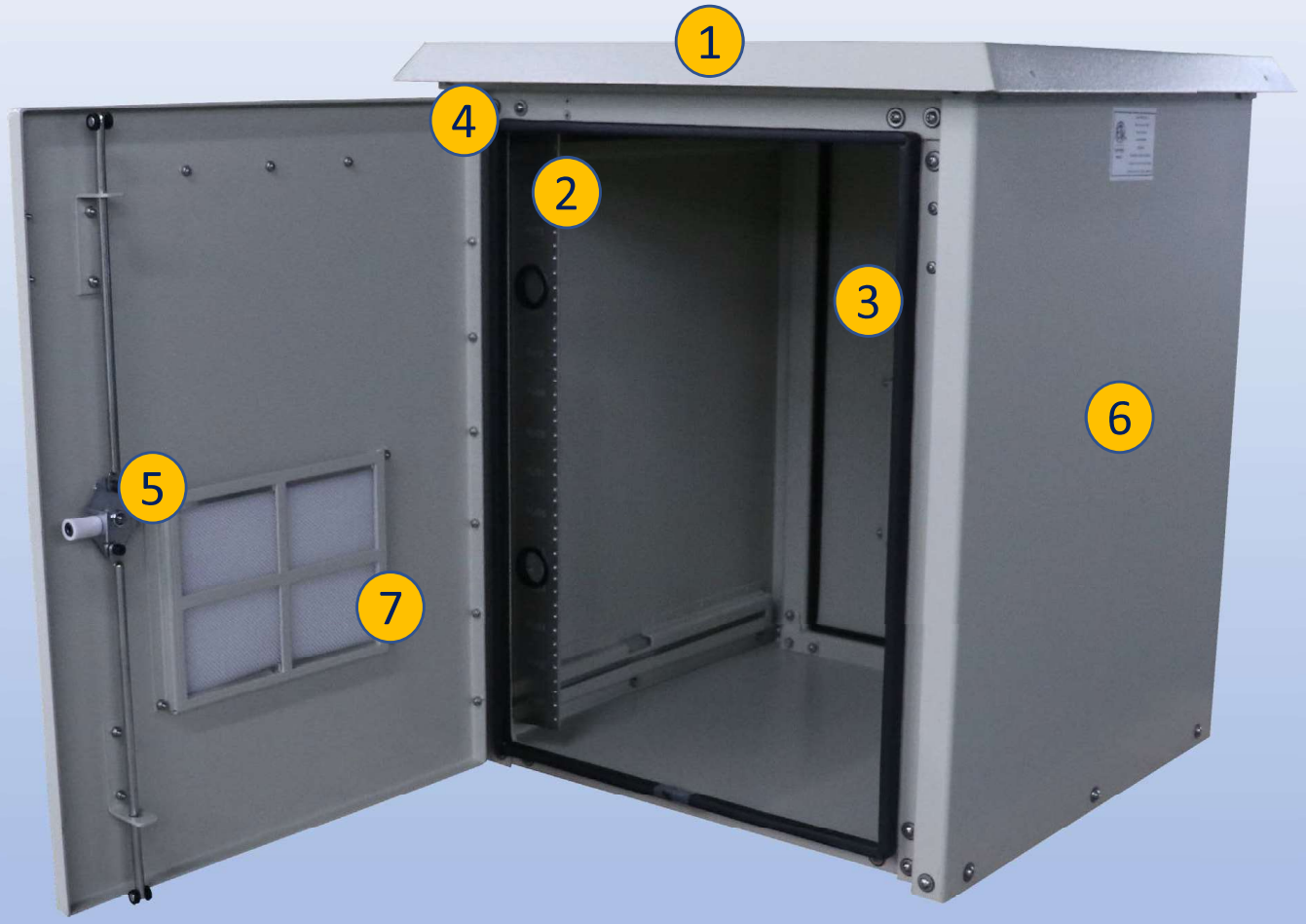

Features

1. Solar Shield (Alumishield)
2. 19” Adjustable Racking Rails
3. Rear Access Door
4. Stainless Steel Door Hinge
5. 3 Point Locking System
6. Powder-Coat Cream
7. Reusable Vent Filters

2301 S. HWY 77 Pauls Valley, OK 73075
T: (800) 753-8459 – F: (877) 220-7236
sales@ddbunlimited.com www.ddbunlimited.com

WEB DRAWING (NOT FOR FABRICATION)

REVISIONS		
REV.	DESCRIPTION	DATE
A	Web Drawing per DR-00423	11/10/2011
B	Upddate with new components and DWG template per DR-00917	5/2/2014
C	UPDATED WITH 2019 FORMAT	2/11/2019
D	UPDATED DRAWING WITH DOOR RODS WITH ROLLERS PER DR-02253	4/2/2020

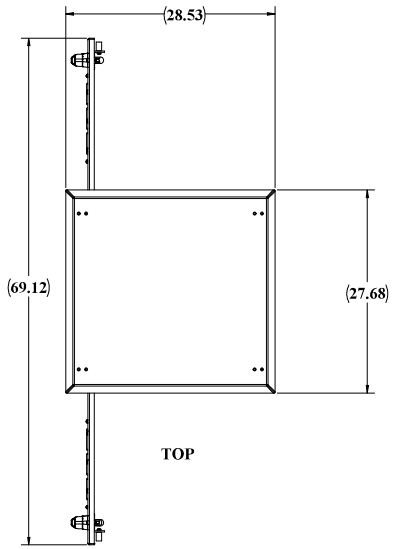

TOP

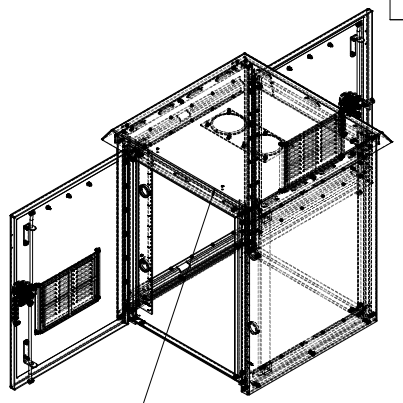

STANDOFFS STANDARD
FOR OPTIONAL LIGHTING
OVER EACH DOOR

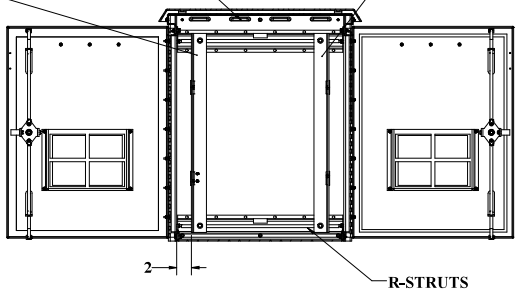

SECTION A-A
SCALE 1 : 8

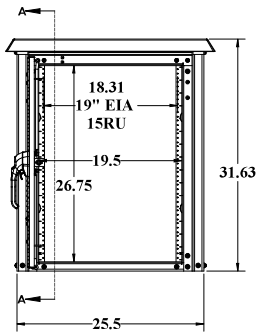

FRONT

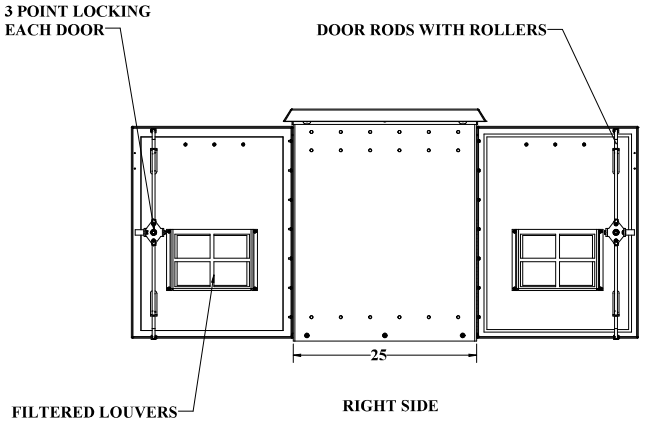

RIGHT SIDE

WEB DRAWING (NOT FOR FABRICATION)

UNLESS OTHERWISE SPECIFIED:		NAME	DATE	DDB Unlimited Inc.			
DIMENSIONS ARE IN INCHES	Model by:	DDB	11/14/2011	OD Family Enclosures			
ANGULAR: MACH ± BEND ± TWO PLACE DECIMAL ± THREE PLACE DECIMAL ±	Drawn by:	Marvin5	02/22/19	Enclosure, OD, 30, DX,			
ALL EDGES TO BE SHARP EXCEPT AS SPECIFIED	Sales Rep.:	Bryan C	11/15/11	SIZE	Cage Code:	DWG. NO.:	REV
MATERIAL: 5052-H32/H34 .125" ASTM-B209-14	Q.A. Appr.:	troy	04/06/20	D	3S5Y5	00423	D
PAINT: BASECOAT/CLEARCOAT SYSTEM MIL-PRF-24712	Prod.Mgr.:	ClarkK	04/06/20	SCALE: 1:32	WEIGHT: 93 lbs.		SHEET 1 OF 3
DO NOT SCALE DRAWING	Control Number:						

DDB FORM 7.1-2 REV.F 05/02/19

UNCLASSIFIED PUBLIC

File Location: (DDB)\EPDM Vault\
C:\DDB\Drawing Requests\Customers\DDB WEB DWG\OD Family WEB\DR-00423 (OD-30DX

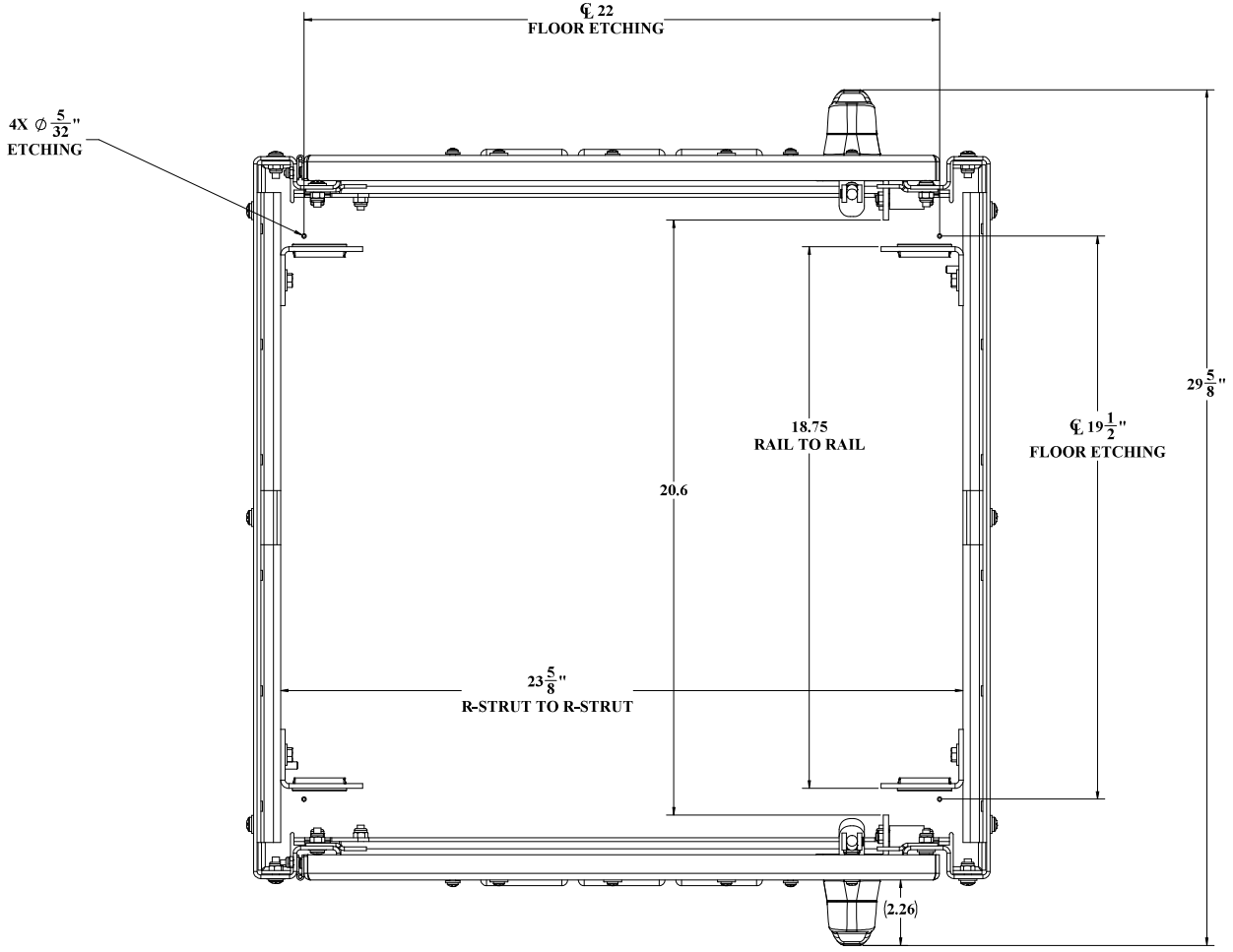

TOP VIEW CEILING AND ALUMASHIELD NOT SHOWN

UNLESS OTHERWISE SPECIFIED:	DDB Unlimited Inc.		
DIMENSIONS ARE IN INCHES ANGULAR: ±1° FRACTIONAL/NO DECIMAL: ±0.125 TWO PLACE DECIMAL: ±.01[0.25] THREE PLACE DECIMAL: ±.010[0.25] ALL HOLES ±0.005[0.13]	DX Closed OD Family Enclosure, DX, Closed		
	SIZE: D	Cage Code: 385Y5	DWG. NO.: 00423 REV: D
MATERIAL: 5052-H32/X.125" ASTM-B-209-04	SCALE: 1:32	WEIGHT:	SHEET 2 OF 3
PAINT: RAINBOW VOGEL, BEIGE, GLOSS TEXTURE 1-5450			
DO NOT SCALE DRAWING			

DDB FORM 7.1-REV.K 08/02/17

UNCLASSIFIED PUBLIC
THE INFORMATION CONTAINED IN THIS DRAWING IS THE SOLE PROPERTY OF DDB Unlimited, INC. ANY
REPRODUCTION IN PART OR AS A WHOLE WITHOUT THE WRITTEN PERMISSION OF DDB Unlimited, INC. IS PROHIBITED.

File Location: (DDB)(EPDM Vault)
C:\DDB\Drawing Requests\Customers\DDB WEB DWG\OD Family WEB\DR-00423 (OD-30DX)\

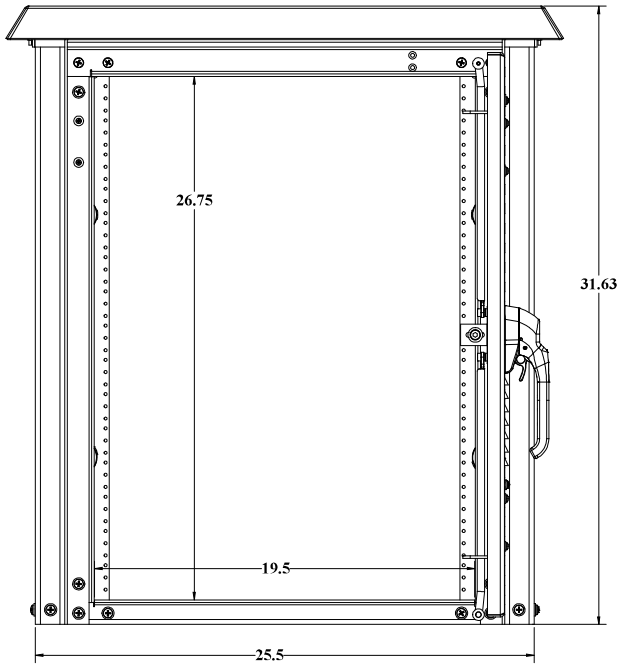

BACK VIEW GASKET NOT SHOWN

UNLESS OTHERWISE SPECIFIED:	**DDB Unlimited Inc.**
DIMENSIONS ARE IN INCHES	OD-30DX
ANGULAR: ±1°	Enclosure, OD, 30, DX
FRACTIONAL/NO DECIMAL: ±0.1250	
TWO PLACE DECIMAL: ±.01250	
THREE PLACE DECIMAL: ±.00500	
ALL EDGES #150RMS	
MATERIAL: 5052-H32X0.125" ASTM-B-209-04	SIZE: D | Cage Code: 385Y5 | DWG. NO.: 00423 | REV: D
PAINT: HARDCOAT ANGEL BLUE GLOSS TEXTURE 24020	SCALE: 1:32 | WEIGHT: | SHEET 3 OF 3
DO NOT SCALE DRAWING	

DDB FORM 7.1-REVX 08/02/17

UNCLASSIFIED PUBLIC
THE INFORMATION CONTAINED IN THIS DRAWING IS THE SOLE PROPERTY OF DDB Unlimited, INC. ANY
REPRODUCTION IN PART OR AS A WHOLE WITHOUT THE WRITTEN PERMISSION OF DDB Unlimited, INC. IS PROHIBITED.

File Location: (DDB)(EPDM Vault)
C:\DDB\Drawing Requests\Customers\DDB WEB DWG\OD Family WEB\DR-00423 (OD-30DX)\

DDB UNLIMITED®

An ISO 9001/27001 Certified company

OD Series

OD-30DDC

Made in America

Believing in American Craftsmanship

15 YEAR WARRANTY

Why Choose the OD Series?

The OD series of enclosures are the ultimate choice for your outdoor racking requirements. Being made of our own rugged, Alumiflex®, you'll find it noticeably lighter than steel, yet strong enough to rack even the heaviest equipment. When choosing the OD series, you have handpicked the highest value in American construction. The OD-30DDC includes the standard features you have come to expect with DDB, incorporating the versatile rail strut (R-Strut) system for adjustable racking, the security of a 3- point locking system and our patented Alumishield® solar cap to manage heat loads. For those who need more than just our standard enclosure, DDB can also make a truly customized solution with our many available options including HVAC; providing a climate-controlled environment for any electronic equipment, electrical load panels and cable entry solutions to name a few. All of this comes together to create an enclosure able to meet all of the unique needs your customers have been seeking. DDB offers a state-of-the-art design, a competitive price, benchmark lead times and a guaranteed delivery, all backed up with an industry leading 15-year warranty on every enclosure. Put DDB's substantial stock to work for you today. Contact our professional staff to assist you with your made-to-order solution.



Features

0.125" Aluminum Construction

Stainless Steel External Hardware/Hinge

3 Point Lock System

Heavy Duty Out-Door Construction

Front and Rear Access

Custom Colors Available

Cream Powder-Coat in Stock

Flexible and Scalable

15 Year Warranty

Quick Shipping

Application Types

Telecommunications
Wireless/Broadband
Fiber Optics
Back Haul
Small Cell/DAS
Public Safety
Utility
Base Station
Military
Trailer-Based Communications
Wi-Fi
LTEE/4G/5G



Environmental & Safety Ratings:

- ✓ NEMA 3R (shown above)
- ✓ NEMA 4 and 4X configurable (not shown)
- ✓ OD-30 Series, ETL environmentally listed to UL 50/50E, Type 4's Available here: https://www.ddbunlimited.com/new-ul-50e-listed/
- ✓ ETL listed; Safety Requirements, UL 62368-1:2019 Ed.3, CSA C22.2

Weight and Dimensions

Approximate Exterior Enclosure Dimensions:

32"H x 28"W x 39"D

Shipping Dimensions:

32"W x 42"L - Palletized

Approximate Shipping Weight:

150 lbs.

2301 S. HWY 77 Pauls Valley, OK 73075
T: (800) 753-8459 – F: (877) 220-7236
sales@ddbunlimited.com www.ddbunlimited.com

DDB UNLIMITED®

An ISO 9001/27001 Certified company

OD Series

OD-30DDC

Made in America

Believing in American Craftsmanship

15 YEAR WARRANTY



Features

1. Alumishield
2. Front and Rear 19” Adjustable Racking Rails, 30 RU’s
3. Rear Access Door
4. Stainless Steel Door Hinge
5. 3-Point Locking System
6. Powder coat, cream
7. Reusable Vent Filters

ETL LISTED c US Intertek

Installation, operating and safety instructions can be downloaded here

Scan this code for replacement parts

2301 S. HWY 77 Pauls Valley, OK 73075
T: (800) 753-8459 – F: (877) 220-7236
sales@ddbunlimited.com www.ddbunlimited.com

Rev C

WEB DRAWING (NOT FOR FABRICATION)

REVISIONS		
REV.	DESCRIPTION	DATE
A	Web Drawing per DR-00424	11/15/2011
B	Update to new template and components per DR-00918	5/8/2014
C	UPDATED WITH 2019 FORMAT	2/13/2019
D	UPDATED DRAWING WTH DOOR RODS WITH ROLLERS PER DR-02254	4/2/2020

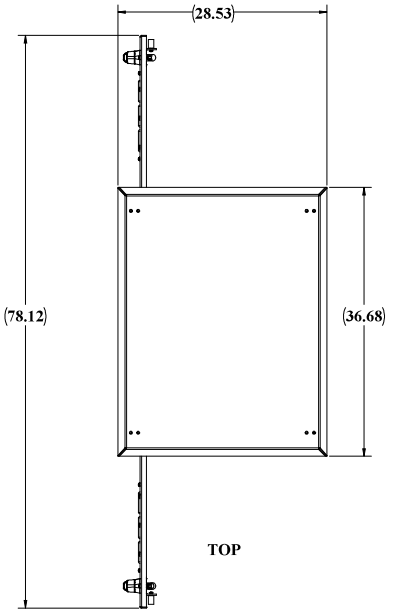

TOP

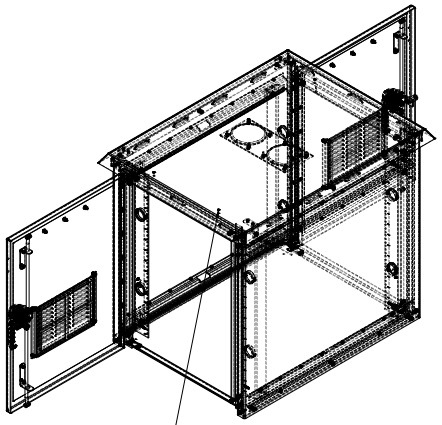

STANDOFFS STANDARD
FOR OPTIONAL LIGHTING
OVER EACH DOOR

FRONT AND REAR RAILS
STANDARD ON DD

CEILING LOUVER

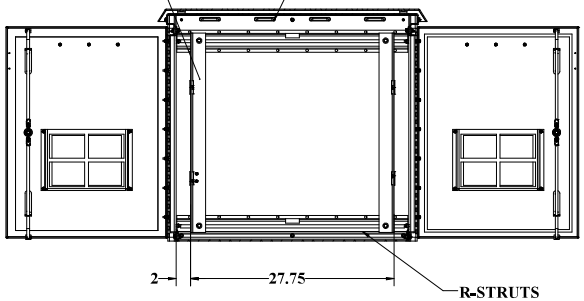

R-STRUTS
FOR RAIL ADJUSTMENT

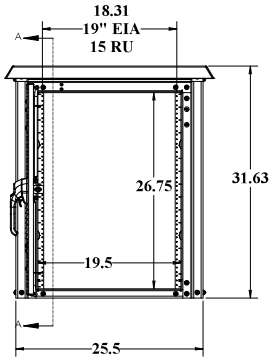

FRONT

DOOR RODS WITH ROLLERS

3 POINT LOCKING
EACH DOOR

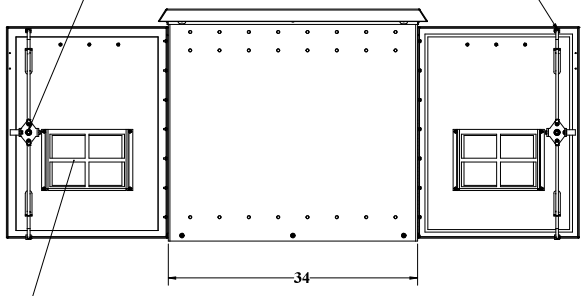

FILTERED LOUVERS

RIGHT SIDE

WEB DRAWING (NOT FOR FABRICATION)

UNLESS OTHERWISE SPECIFIED:		NAME	DATE	DDB Unlimited Inc.
DIMENSIONS ARE IN INCHES	Modeled by:	DDB	11/15/2011	OD Family Enclosures
ANGULAR: MACH ± BEND ± TWO PLACE DECIMAL ± THREE PLACE DECIMAL ±	Drawn by:	Marvin S	02/22/19	Enclosure, OD, 30, DD
ALL HOLES PLATED ☐ MATERIAL FINISH BEGIN ± 1/2"	Sales Rep.:	Bryan C	11/16/11	
	Q.A. Appr.:	troy	04/06/20	SIZE: D — Cage Code: 3S5Y5 — DWG. NO.: 00424 — REV: D
	Prod.Mgr.:	ClarkK	04/06/20	
MATERIAL: 5052-H32-0.125" ASTM B209-04				
PAINT:	Control Number:			SCALE: 1:32 — WEIGHT: 111 lbs. — SHEET 1 OF 3
DO NOT SCALE DRAWING				

DDB FORM 7.1-2 REV.F 05/02/19

UNCLASSIFIED PUBLIC

File Location: (DDB)\EPDM Vault\
C:\DDB\Drawing Requests\Customers\DDB WEB DWG\OD Family WEB\DR-00424 (OD-30DD

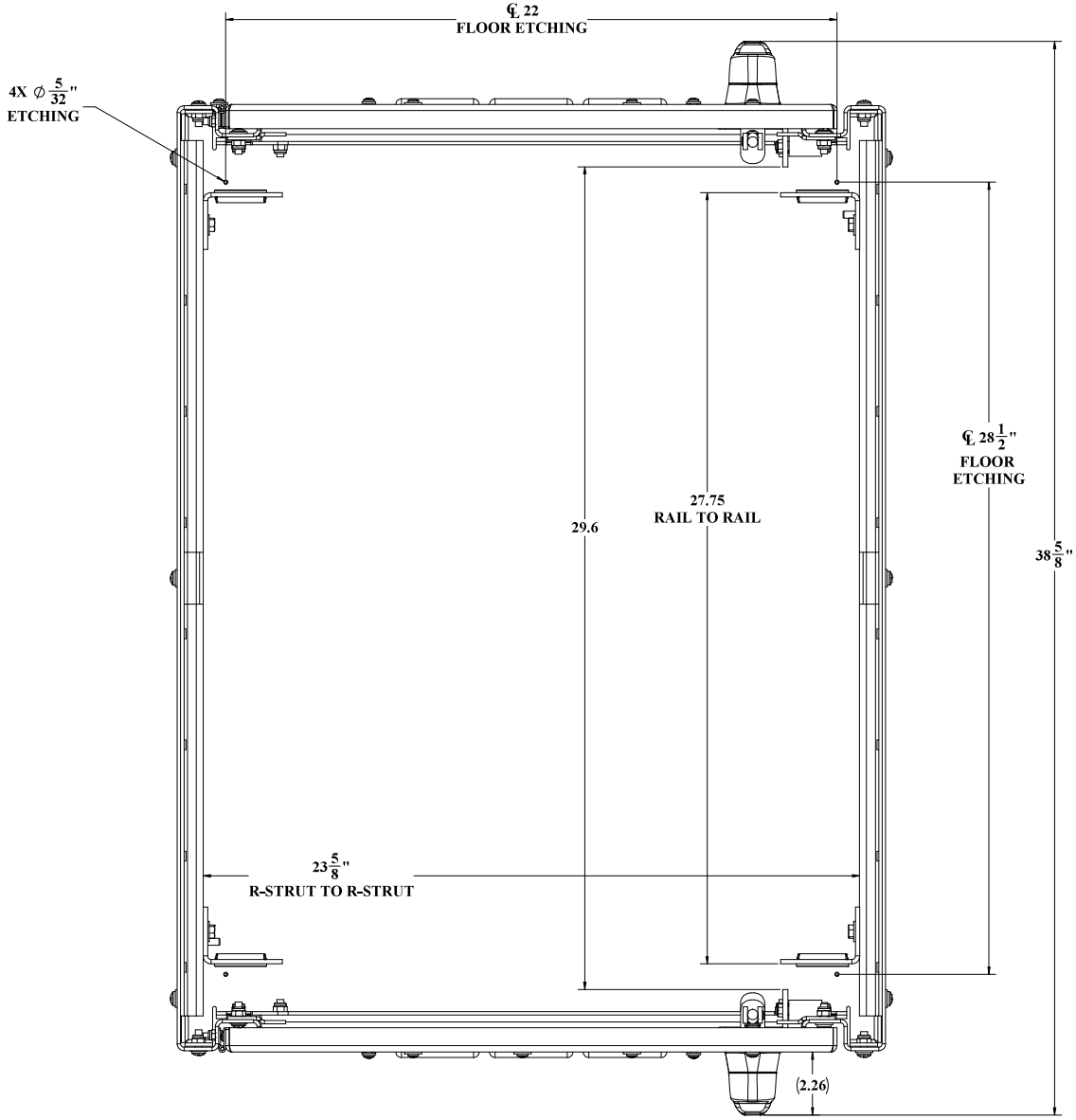

TOP VIEW CEILING AND ALUMASHIELD NOT SHOWN

UNLESS OTHERWISE SPECIFIED:	DDB Unlimited Inc.		
DIMENSIONS ARE IN INCHES ANGULAR: ±1° FRACTIONAL/NO DECIMAL: ±0.125 TWO PLACE DECIMAL: ± 0.010 THREE PLACE DECIMAL: ± 0.005 ALL HOLES ±0.003 Ⓜ	DD Closed OD Family Enclosure, DD, Closed		
	SIZE: D	Cage Code: 385Y5	DWG. NO.: 00424 REV: D
MATERIAL: 5052-H32-0.125" ASTM B209-04	SCALE: 1:32	WEIGHT:	SHEET 2 OF 3
PAINT: DIAMOND VOGEL, RESIL 14A00 TEXTURE 154870	DO NOT SCALE DRAWING		

UNCLASSIFIED PUBLIC
THE INFORMATION CONTAINED IN THIS DRAWING IS THE SOLE PROPERTY OF DDB Unlimited, INC. ANY
REPRODUCTION IN PART OR AS A WHOLE WITHOUT THE WRITTEN PERMISSION OF DDB Unlimited, INC. IS PROHIBITED.

File Location: (DDB)(EPDM Vault)
C:\DDB\Drawing Requests\Customers\DDB WEB DWG\OD Family WEB\DR-00424 (OD-30DD)\

DDB FORM 7.1-7 REV.K 08/02/17

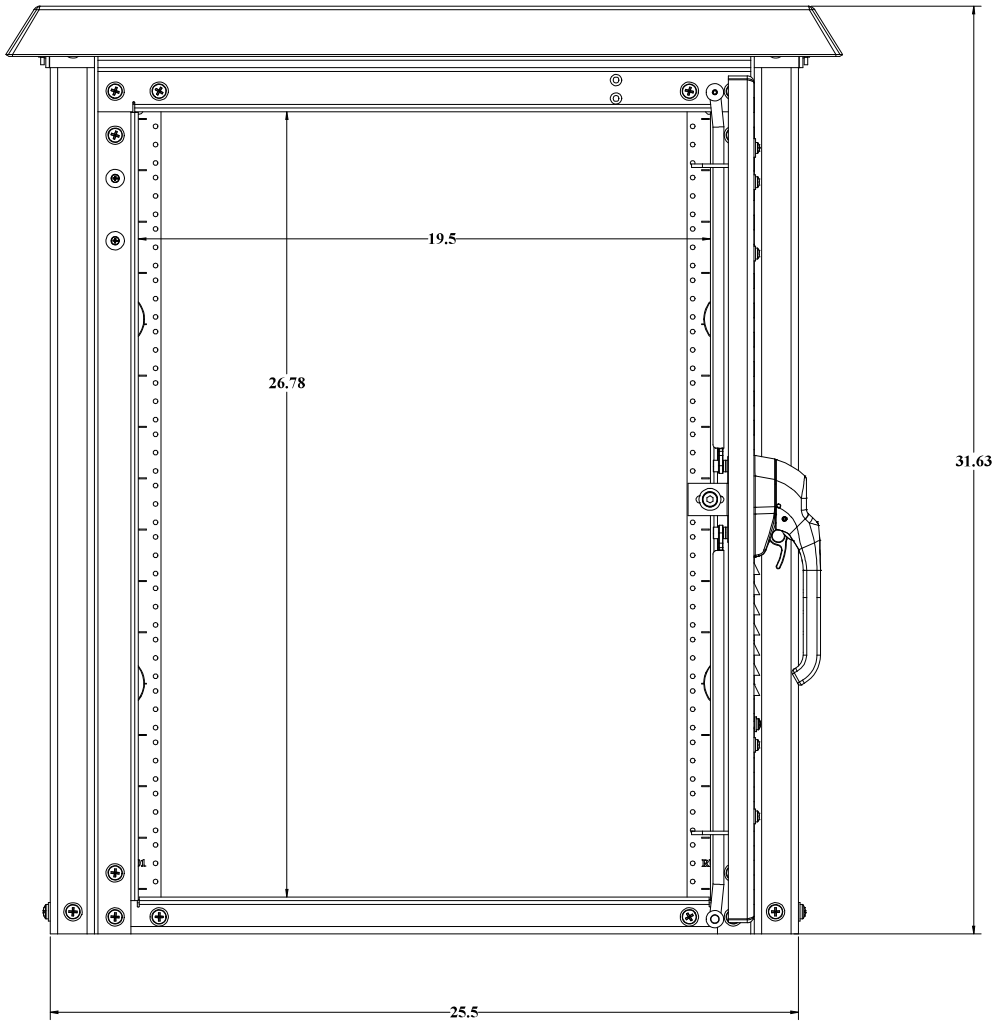

BACK VIEW GASKET NOT SHOWN

UNLESS OTHERWISE SPECIFIED:	DDB Unlimited Inc.		
DIMENSIONS ARE IN INCHES ANGULAR: ±1° FRACTIONAL: NO DECIMAL: ±0.1250 TWO PLACE DECIMAL: ±0.0100 THREE PLACE DECIMAL: ±0.0050 ALL HOLES: ±0.0030	OD-30DD Enclosure, OD, 30, DD		
	SIZE: D	Cage Code: 385Y5	DWG. NO.: 00424 REV: D
MATERIAL: 5052-H32-0.125" ASTM B209-04	SCALE: 1:32	WEIGHT:	SHEET 3 OF 3
PAINT: RADIONO TOGEL, BEIGE, GLOSS TEXTURE LC5450			
DO NOT SCALE DRAWING			

DDB FORM 7.1-REV.K 08/02/17

UNCLASSIFIED PUBLIC
THE INFORMATION CONTAINED IN THIS DRAWING IS THE SOLE PROPERTY OF DDB Unlimited, INC. ANY
REPRODUCTION IN PART OR AS A WHOLE WITHOUT THE WRITTEN PERMISSION OF DDB Unlimited, INC. IS PROHIBITED.

File Location: (DDB)(EPDM Vault)
C:\DDB\Drawing Requests\Customers\DDB WEB DWG\OD Family WEB\DR-00424 (OD-30DD)\

An ISO 9001/27001 Certified company

OD Series

OD-30DDXC

Made in America

Believing in American Craftsmanship

15 YEAR WARRANTY

Why Choose the OD Series?

The OD series of enclosures are the ultimate choice for your outdoor racking requirements. Being made of our own rugged Alumiflex®, you'll find it noticeably lighter than steel, yet strong enough to rack even the heaviest equipment. When choosing the OD series, you have handpicked the highest value in American construction. The OD-30DDXC includes the standard features you have come to expect with DDB, incorporating the versatile rail strut (R-Strut) system for adjustable racking, the security of a 3- point locking system and our patented Alumishield® solar cap to manage heat loads. For those who need more than just our standard enclosure, DDB can also make a truly customized solution with our many available options including HVAC, providing a climate-controlled environment for any electronic equipment, electrical load panels and cable entry solutions to name a few. All of this comes together to create an enclosure able to meet all of the unique needs your customers have been seeking. DDB offers a state-of-the-art design, a competitive price, benchmark lead times and a guaranteed delivery, all backed up with an industry leading 15-year warranty on every enclosure. Put DDB's substantial stock to work for you today. Contact our professional staff to assist you with your made-to-order solution.



Features

0.125" Aluminum Construction

Stainless Steel External Hardware/Hinge

3 Point Lock System

Heavy Duty Out-Door Construction

Front and Rear Access

Custom Colors Available

Cream Powder-Coat in Stock

Flexible and Scalable

15 Year Warranty

Quick Shipping

Application Types

Telecommunications
Wireless/Broadband
Fiber Optics
Back Haul
Small Cell/DAS
Public Safety
Utility
Base Station
Military
Trailer-Based Communications
Wi-Fi
LTEE/4G/5G



Environmental & Safety Ratings:

- ✓ NEMA 3R (shown above)
- ✓ NEMA 4 and 4X configurable (not shown)
- ✓ OD-30 Series, ETL environmentally listed to UL 50/50E, Type 4's Available here: https://www.ddbunlimited.com/new-ul-50e-listed/
- ✓ ETL listed; Safety Requirements, UL 62368-1:2019 Ed.3, CSA C22.2

Weight and Dimensions

Approximate Exterior Enclosure Dimensions:

32"H x 28"W x 47"D

Shipping Dimensions:

32"W x 52"L- Palletized

Approximate Shipping Weight:

187 lbs.

2301 S. HWY 77 Pauls Valley, OK 73075
T: (800) 753-8459 – F: (877) 220-7236
sales@ddbunlimited.com www.ddbunlimited.com

DDB UNLIMITED®

An ISO 9001/27001 Certified company

OD Series

OD-30DDXC

Made in America

Believing in American Craftsmanship

15 YEAR WARRANTY

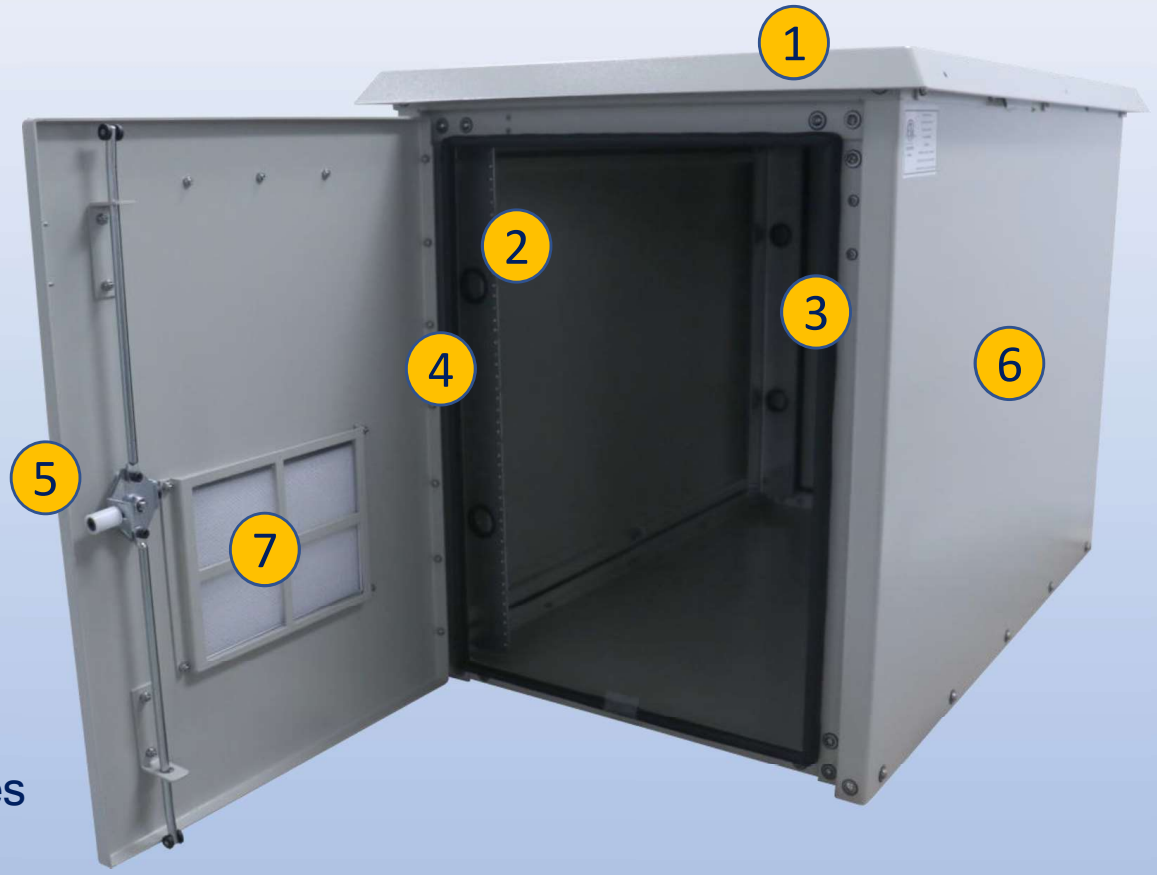

Features

1. Alumishield
2. Front and Rear 19” Adjustable Racking Rails, 15 RU’s
3. Rear Access Door
4. Stainless Steel Door Hinge
5. 3 Point Locking System
6. Powder Coat Cream
7. Reusable Vent Filters

c ETL US LISTED Intertek

Installation, operating and safety instructions can be downloaded here

Scan this code for replacement parts

2301 S. HWY 77 Pauls Valley, OK 73075
T: (800) 753-8459 – F: (877) 220-7236
sales@ddbunlimited.com www.ddbunlimited.com

Rev C

WEB DRAWING (NOT FOR FABRICATION)

REVISIONS		
REV.	DESCRIPTION	DATE
A	Web Drawing per DR-00425	11/15/2011
B	Add new components and DWG template to WEB DWG per DR-00919	5/12/2014
C	UPDATED DRAWING WITH DOOR RODS WITH ROLLERS PER DR-02255	4/2/2020

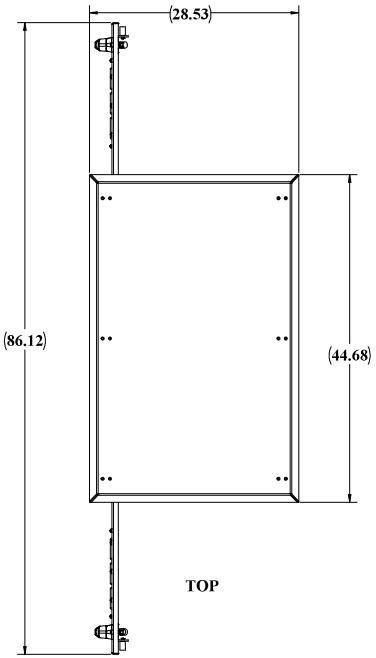

TOP

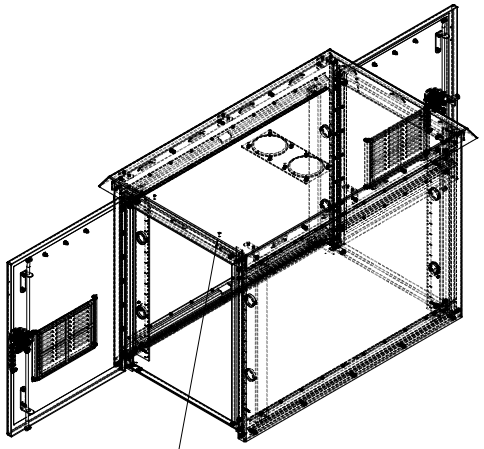

STANDOFFS STANDARD
FOR OPTIONAL LIGHTING
OVER EACH DOOR.

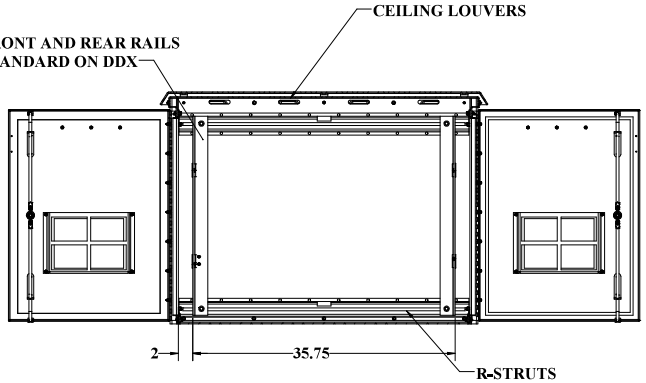

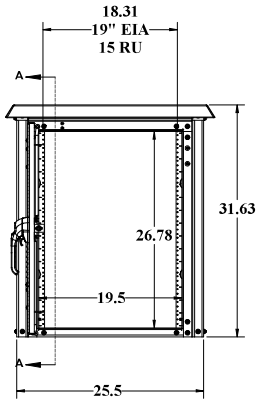

FRONT

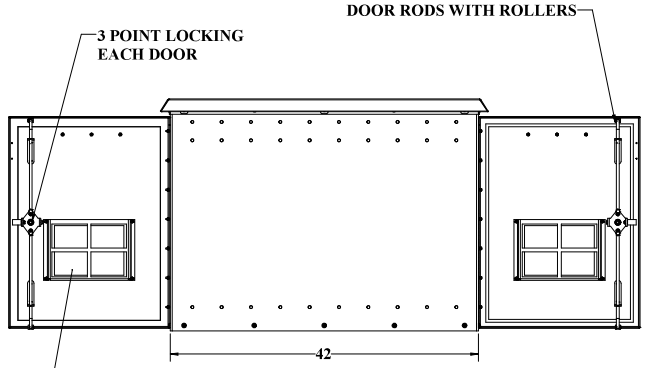

RIGHT SIDE

WEB DRAWING (NOT FOR FABRICATION)

UNLESS OTHERWISE SPECIFIED:		NAME	DATE	DDB Unlimited Inc.			
DIMENSIONS ARE IN INCHES	Modeled by:	DDB	11/15/2011	OD Family Enclosures			
ANGULAR: MACH BEND ±.5° TWO PLACE DECIMAL ±.010 THREE PLACE DECIMAL ±.005	Drawn by:	EdwardW	05/12/14	Enclosure, OD, 30, DDX			
ALL EDGES BREAK TO .005 MAX. MATERIAL FRACTIONS ±.125	Sales.Rep.	Bryan C	11/16/11	SIZE	Cage Code:	DWG. NO.:	REV
	Q.A. Appr.	tony	04/06/20	D	3S5Y5	00425	C
MATERIAL: 5052-H32-0.125-ASTM-B209-04	Prod.Mgr.	ClarkK	04/06/20				
PAINT: Textured Sand, Ship Silver Vortex Cat5E	Control Number:			SCALE: 1:32	WEIGHT: 127 lbs.		SHEET 1 OF 3
DO NOT SCALE DRAWING							

DDB FORM: 7.1-2 REV:F 05/02/19

UNCLASSIFIED PUBLIC

File Location: (DDB)\PDM Vault\
C:\DDB\Drawing Requests\Customers\DDB WEB DWG\OD Family WEB\DR-00425 (OD-30DD)

WEB DRAWING (NOT FOR FABRICATION)

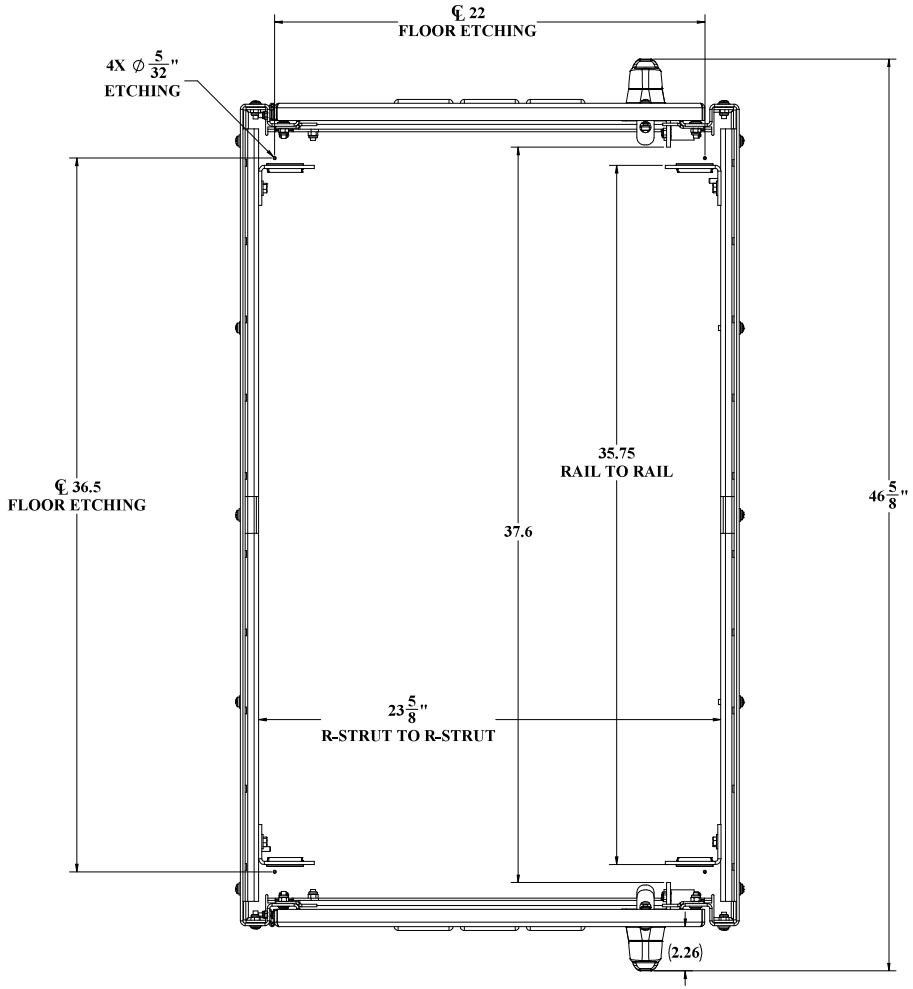

TOP VIEW CEILING AND ALUMASHIELD NOT SHOWN

WEB DRAWING (NOT FOR FABRICATION)

UNLESS OTHERWISE SPECIFIED:	DDB Unlimited Inc.		
DIMENSIONS ARE IN INCHES ANGULAR: ±1° FRACTIONAL: ±0.125 TWO PLACE DECIMAL: ±0.010 TWO PLACE DECIMAL: ±0.010 THREE PLACE DECIMAL: ±0.005 ALL EDGES #180GB	DDX Closed OD Family Enclosure, DDX, Closed		
	SIZE: D	Cage Code: 385Y5	DWG. NO.: 00425 REV: C
MATERIAL: 5052-H32-0.125-SATIN-B209-01	SCALE: 1:32	WEIGHT:	SHEET 2 OF 3
PAINT: Diamond Vogel, Beige Gloss Texture F3-9320			
DO NOT SCALE DRAWING			

DDB FORM 7.1-REV.K 08/02/17

UNCLASSIFIED PUBLIC
THE INFORMATION CONTAINED IN THIS DRAWING IS THE SOLE PROPERTY OF DDB Unlimited, INC. ANY
REPRODUCTION IN PART OR AS A WHOLE WITHOUT THE WRITTEN PERMISSION OF DDB Unlimited, INC. IS PROHIBITED.

File Location: (DDB) (EPDM Vault)
C:\DDB\Drawing Requests\Customers\DDB WEB DWG\OD Family WEB\DR-00425 (OD-30DDX)\

WEB DRAWING (NOT FOR FABRICATION)

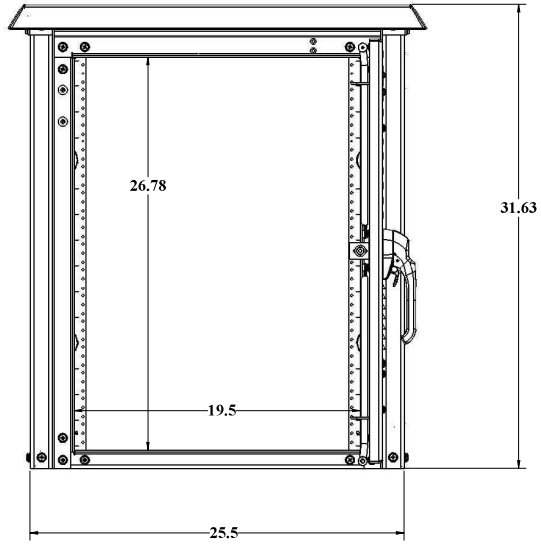

BACK VIEW GASKET NOT SHOWN

DDB FORM 7.1-7 REV.K 08/02/17

WEB DRAWING (NOT FOR FABRICATION)

UNLESS OTHERWISE SPECIFIED: DIMENSIONS ARE IN INCHES. ANGULAR: ±1° FRACTIONAL/NO DECIMAL: ±0.1250 TWO PLACE DECIMAL: ±0.0500 THREE PLACE DECIMAL: ±0.0100 ALL HOLES ±0.0050	*DDB Unlimited Inc.*			
	OD-30DDX			
	Enclosure, OD, 30, DDX			
	SIZE	Cage Code:	DWG. NO.:	REV
MATERIAL: 5052-H32-0.125-ASTM-B209-04	D	3S5Y5	00425	C
PAINT: Diamond Vogel, Beige Gloss Texture F3-9320	SCALE: 1:32	WEIGHT:		SHEET 3 OF 3
DO NOT SCALE DRAWING				

UNCLASSIFIED PUBLIC
THE INFORMATION CONTAINED IN THIS DRAWING IS THE SOLE PROPERTY OF DDB Unlimited, INC. ANY
REPRODUCTION IN PART OR AS A WHOLE WITHOUT THE WRITTEN PERMISSION OF DDB Unlimited, INC. IS PROHIBITED.

File Location: (DDB) [EPDM Vault]
C:\DDB\Drawing Requests\Customers\DDB WEB DWG\OD Family WEB\DR-00425 (OD-30DDX)\

An ISO 9001/27001 Certified company

OD Series

OD-50DXC

Made in America

Believing in American Craftsmanship

15 YEAR WARRANTY

Why Choose the OD Series?

The OD series of enclosures are the ultimate choice for your outdoor racking requirements. Being made of our own rugged Alumiflex®, you'll find it noticeably lighter than steel, yet strong enough to rack even the heaviest equipment. When choosing the OD series, you have handpicked the highest value in American construction. The OD-50DXC includes the standard features you have come to expect with DDB, incorporating the versatile rail strut (R-Strut) system for adjustable racking, the security of a 3- point locking system and our patented Alumishield® solar cap to manage heat loads. For those who need more than just our standard enclosure, DDB can also make a truly customized solution with our many available options including HVAC, providing a climate-controlled environment for any electronic equipment, electrical load panels and cable entry solutions to name a few. All of this comes together to create an enclosure able to meet all of the unique needs your customers have been seeking. DDB offers a state-of-the-art design, a competitive price, benchmark lead times and a guaranteed delivery, all backed up with an industry leading 15-year warranty on every enclosure. Put DDB's substantial stock to work for you today. Contact our professional staff to assist you with your made-to-order solution.



Features

0.125" Aluminum Construction

Stainless Steel External Hardware/Hinge

3 Point Lock System

Heavy Duty Out-Door Construction

Front and Rear Access

Custom Colors Available

Cream Powder-Coat, Standard

Flexible and Scalable

15 Year Warranty

Quick Shipping

Application Types

Telecommunications
Wireless/Broadband
Fiber Optics
Back Haul
Small Cell/DAS
Public Safety
Utility
Base Station
Military
Trailer-Based Communications
Wi-Fi
LTEE/4G/5G



Environmental & Safety Ratings:

- ✓ NEMA 3R (shown above)
- ✓ NEMA 4 and 4X configurable (not shown)
- ✓ OD-50 Series, ETL environmentally listed to UL 50/50E, Type 4's
  Available here: https://www.ddbunlimited.com/new-ul-50e-listed/
- ✓ ETL listed; Safety Requirements, UL 62368-1:2019 Ed.3, CSA C22.2

Weight and Dimensions

Approximate Exterior Enclosure Dimensions:

51"H x 28"W x 30"D

Shipping Dimensions:

32"W x 42"L - Palletized

Approximate Shipping Weight:

161 lbs.

2301 S. HWY 77 Pauls Valley, OK 73075
T: (800) 753-8459 – F: (877) 220-7236
sales@ddbunlimited.com www.ddbunlimited.com

OD Series

OD-50DXC

An ISO 9001/27001 Certified company

Made in America

Believing in American Craftsmanship

15 YEAR WARRANTY



Features

1. Alumishield
2. 19” Adjustable Racking Rails
3. Rear Access Door
4. Stainless Steel Door Hinge
5. 3 Point Locking System
6. Powder-Coat Cream
7. Reusable Vent Filters

C ETL US LISTED Intertek

Installation, operating and safety instructions can be downloaded here

Scan this code for replacement parts

2301 S. HWY 77 Pauls Valley, OK 73075
T: (800) 753-8459 – F: (877) 220-7236
sales@ddbunlimited.com www.ddbunlimited.com

Rev C

WEB DRAWING (NOT FOR FABRICATION)

REVISIONS		
REV.	DESCRIPTION	DATE
A	Web Drawing per DR-00425	11/15/2011
B	Add new components and DWG template to WEB DWG per DR-00920	5/12/2014
C	UPDATED WITH 2019 FORMAT	2/25/2019
D	UPDATED DRAWING WITH DOOR RODS WITH ROLLERS PER DR-02256	4/7/2020

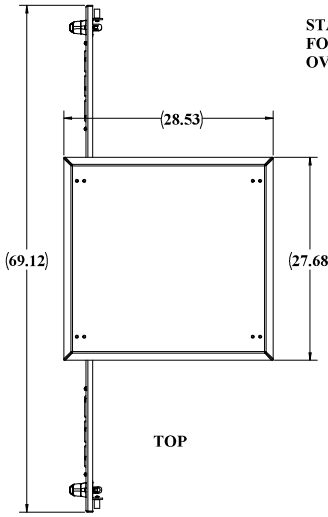

TOP

STANDOFFS STANDARD
FOR OPTIONAL LIGHTING
OVER EACH DOOR

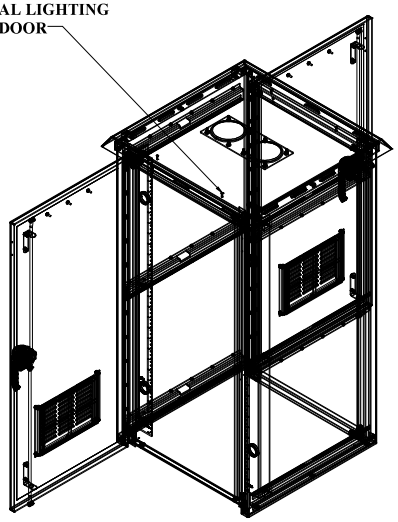

CEILING LOUVERS

FRONT RAILS STANDARD

OPTIONAL REAR SET OF RAILS

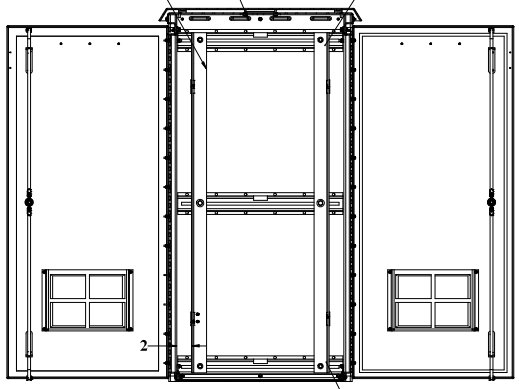

R-STRUTS
FOR RAIL ADJUSTMENT

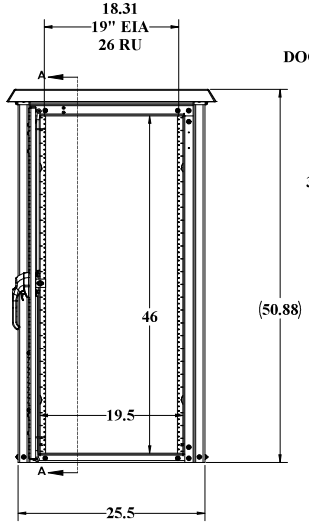

FRONT

DOOR RODS WITH ROLLERS

3 POINT LOCKING

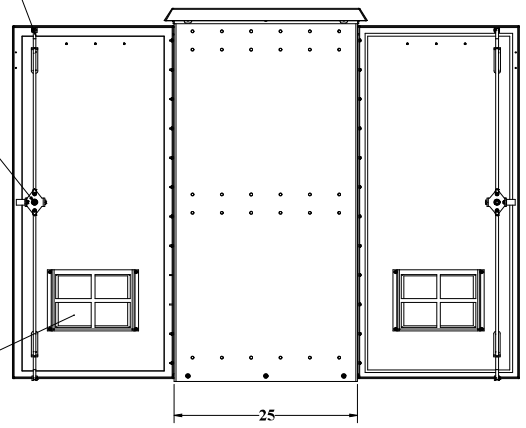

FILTERED
LOUVERS

RIGHT SIDE

DDB FORM 7.1-2 REV.F 05/02/19

WEB DRAWING (NOT FOR FABRICATION)

UNLESS OTHERWISE SPECIFIED:		NAME	DATE	DDB Unlimited Inc.
DIMENSIONS ARE IN INCHES	Modeled by:	DDB	11/15/2011	OD Family Enclosures
ANGULAR: MACH ± BEND ± TWO PLACE DECIMAL ± THREE PLACE DECIMAL ±	Drawn by:	areese	04/08/20	Enclosure, OD, 50, DX
ALL EDGES BREAK ● MATERIAL TOLERANCES ±	Sales Rel'd	Con Campbell	11/16/11	
	Q.A. Appr.	Matty	04/20/20	SIZE: D; Cage Code: 3S5Y5; DWG. NO.: 00426; REV: D
MATERIAL: 5052-H32/0.125" ALUM-043004	Prod.Mgr.	ClarkK	04/21/20	
PAINT: DIAMOND VOGEL HI-FIX GLOSS TEXTURE 15070	Control Number:			SCALE: 1:32; WEIGHT: 128 lbs.; SHEET 1 OF 3
DO NOT SCALE DRAWING				

UNCLASSIFIED PUBLIC

File Location: (DDB)\EPDM Vault\
C:\DDB\Drawing Requests\Customers\DDB WEB DWG\OD Family WEB\DR-00426 (OD-50DX

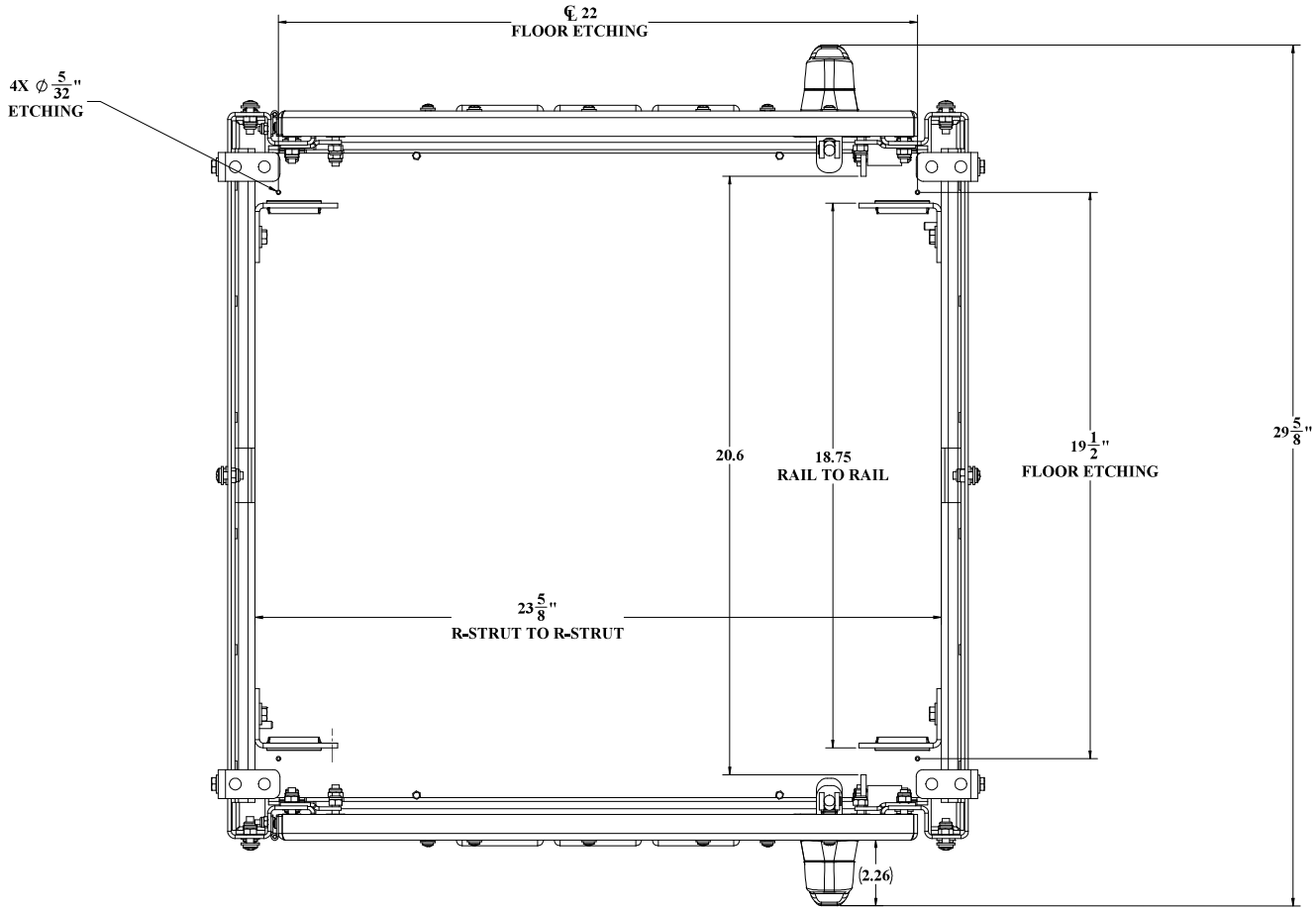

TOP VIEWCEILING OR ALUMASHIELD SHOWN

UNLESS OTHERWISE SPECIFIED:	DDB Unlimited Inc.		
DIMENSIONS ARE IN INCHES ANGULAR: ±1° FRACTIONAL/NO DECIMAL: ±0.1250 TWO PLACE DECIMAL: ±0.0100 THREE PLACE DECIMAL: ±0.0050 ALL HOLES ±0.0030	DX Closed OD Family Enclosure, DX, Closed		
	SIZE: D	Cage Code: 385Y5	DWG. NO.: 00426 REV: D
MATERIAL: 5052-H32/0.125" ASTM-B209-04			
PAINT: DIAMOND NAVEL BLUE GLOSS TEXTURE 54030	SCALE: 1:32	WEIGHT:	SHEET 2 OF 3
DO NOT SCALE DRAWING			

DDB FORM 7.1-7 REV.K 08/02/17

UNCLASSIFIED PUBLIC
THE INFORMATION CONTAINED IN THIS DRAWING IS THE SOLE PROPERTY OF DDB Unlimited, INC. ANY
REPRODUCTION IN PART OR AS A WHOLE WITHOUT THE WRITTEN PERMISSION OF DDB Unlimited, INC. IS PROHIBITED.

File Location: (DDB)(EPDM Vault)
C:\DDB\Drawing Requests\Customers\DDB WEB DWG\OD Family WEB\DR-00426 (OD-50DX)\

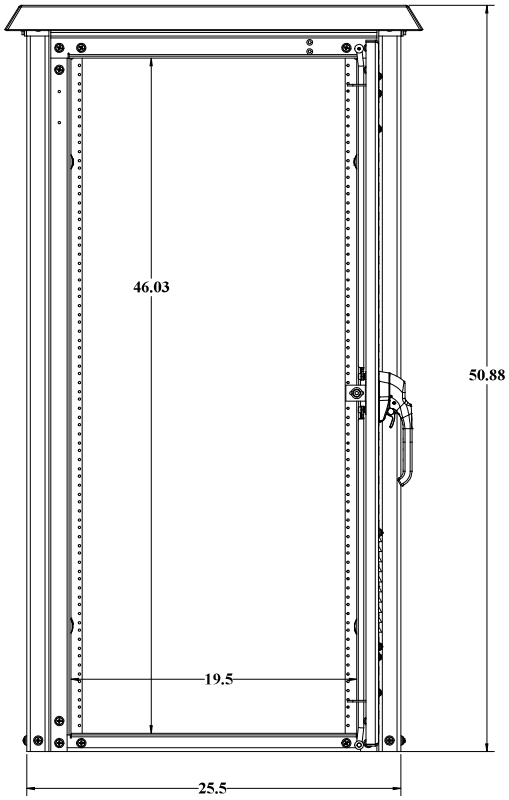

BACK VIEW GASKET NOT SHOWN

UNLESS OTHERWISE SPECIFIED:	DDB Unlimited Inc.		
DIMENSIONS ARE IN INCHES ANGULAR: ±1° FRACTIONAL/NO DECIMAL: ±0.1250 TWO PLACE DECIMAL: ±0.0100 TWO PLACE DECIMAL: ±0.0050 THREE PLACE DECIMAL: ±0.0030 ALL HOLES ⌀0.0050Ⓜ	OD-50DX Enclosure, OD, 50, DX		
	SIZE: D	Cage Code: 3S5Y5	DWG. NO.: 00426 REV: D
MATERIAL: 5052-H32/0.125" ASTM-B209-04			
PAINT: SEMI-GLOSS VINYL, BOOK CLOTH TEXTURE E-60030	SCALE: 1:32	WEIGHT:	SHEET 3 OF 3
DO NOT SCALE DRAWING			

DDB FORM 7.1-REV.K 08/02/17

UNCLASSIFIED PUBLIC
THE INFORMATION CONTAINED IN THIS DRAWING IS THE SOLE PROPERTY OF DDB Unlimited, INC. ANY
REPRODUCTION IN PART OR AS A WHOLE WITHOUT THE WRITTEN PERMISSION OF DDB Unlimited, INC. IS PROHIBITED.

File Location: (DDB)(EPDM Vault)
C:\DDB\Drawing Requests\Customers\DDB WEB DWG\OD Family WEB\DR-00426 (OD-50DX)\

An ISO 9001/27001 Certified company

OD Series

OD-50DDC

Made in America

Believing in American Craftsmanship

Why Choose the OD Series?

The OD series of enclosures are the ultimate choice for your outdoor racking requirements. Being made of our own rugged, Alumiflex®, you'll find it noticeably lighter than steel, yet strong enough to rack even the heaviest equipment. When choosing the OD series, you have handpicked the highest value in American construction. The OD-50DDC includes the standard features you have come to expect with DDB, incorporating the versatile rail strut (R-Strut) system for adjustable racking, the security of a 3- point locking system and our patented Alumishield® solar cap to manage heat loads. For those who need more than just our standard enclosure, DDB can also make a truly customized solution with our many available options including HVAC; providing a climate-controlled environment for any electronic equipment, electrical load panels and cable entry solutions to name a few. All of this comes together to create an enclosure able to meet all of the unique needs your customers have been seeking. DDB offers a state-of-the-art design, a competitive price, benchmark lead times and a guaranteed delivery, all backed up with an industry leading 15-year warranty on every enclosure. Put DDB's substantial stock to work for you today. Contact our professional staff to assist you with your made-to-order solution.



Features

0.125" Aluminum Construction

Stainless Steel External Hardware/Hinge

3 Point Lock System

Heavy Duty Out-Door Construction

Front and Rear Access

Custom Colors Available

Cream Powder-Coat in Stock

Flexible and Scalable

15 Year Warranty

Quick Shipping

Application Types

Telecommunications
Wireless/Broadband
Fiber Optics
Back Haul
Small Cell/DAS
Public Safety
Utility
Base Station
Military
Trailer-Based Communications
Wi-Fi
LTEE/4G/5G



Environmental & Safety Ratings:

- ✓ NEMA 3R (shown above)
- ✓ NEMA 4 and 4X configurable (not shown)
- ✓ OD-50 Series, ETL environmentally listed to UL 50/50E, Type 4's Available here: https://www.ddbunlimited.com/new-ul-50e-listed/
- ✓ ETL listed; Safety Requirements, UL 62368-1:2019 Ed.3, CSA C22.2

Weight and Dimensions

Approximate Exterior Enclosure Dimensions:

51"H x 28"W x 39"D

Shipping Dimensions:

32"W x 42"L - Palletized

Approximate Shipping Weight:

188 lbs.

2301 S. HWY 77 Pauls Valley, OK 73075
T: (800) 753-8459 – F: (877) 220-7236
sales@ddbunlimited.com www.ddbunlimited.com

OD Series

OD-50DDC

An ISO 9001/27001 Certified company

Made in America

Believing in American Craftsmanship

15 YEAR WARRANTY



Features

1. Solar Shield (Alumishield)
2. Front and Rear 19” Adjustable Racking Rails, 52 RU’s
3. Rear Access Door
4. Stainless Steel Door Hinge
5. 3-Point Locking System
6. Powder-Coat Cream
7. Reusable Vent Filters

ETL LISTED C US Intertek

Installation, operating and safety instructions can be downloaded here

Scan this code for replacement parts

2301 S. HWY 77 Pauls Valley, OK 73075
T: (800) 753-8459 – F: (877) 220-7236
sales@ddbunlimited.com www.ddbunlimited.com

Rev C

WEB DRAWING (NOT FOR FABRICATION)

REVISIONS		
REV.	DESCRIPTION	DATE
A	Web Drawing per DR-00425	11/15/2011
B	Add new components and DWG template to WEB DWG per DR-00921	5/12/2014
C	UPDATED TO NEW 2019 TEMPLATES	3/1/2019
D	UPDATED DRAWING WITH DOOR RODS WITH ROLLERS PER DR-02257	4/8/2020

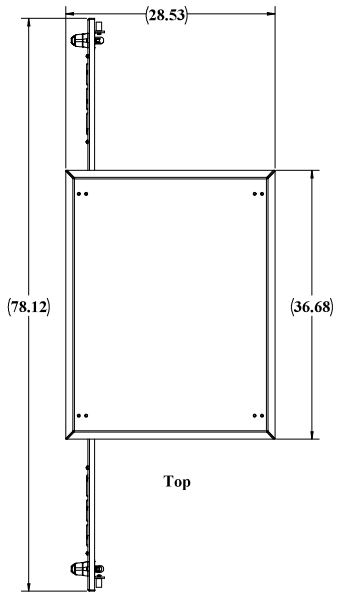

STANDOFFS STANDARD
FOR OPTIONAL LIGHTING
OVER EACH DOOR

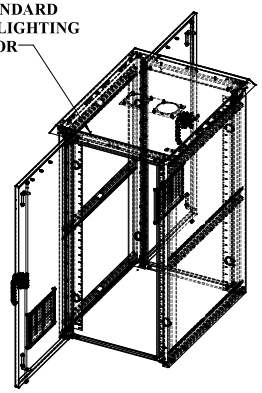

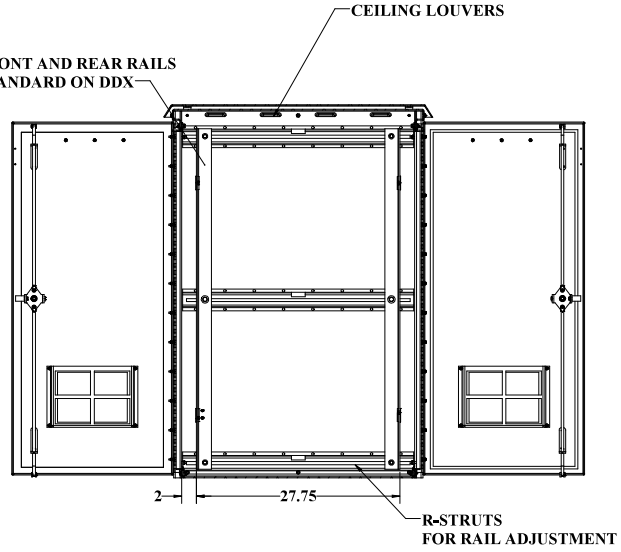

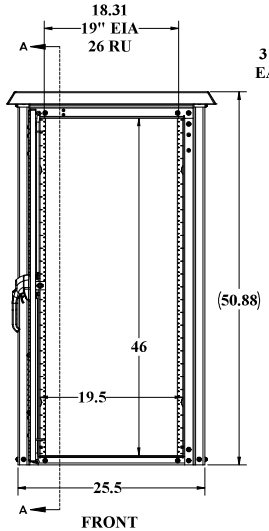

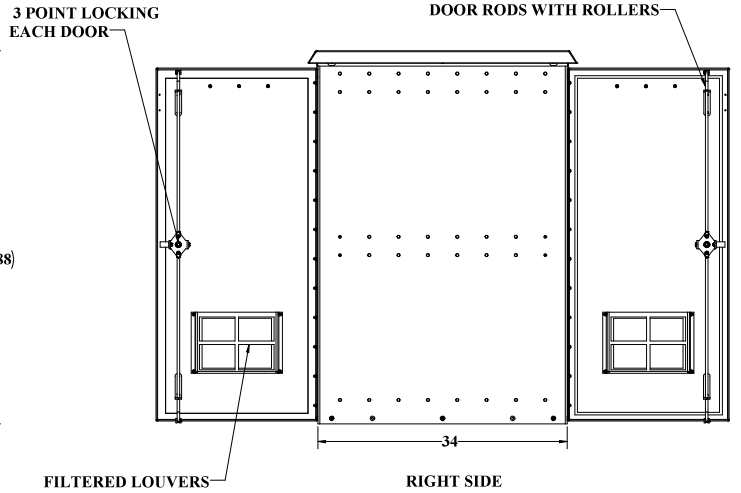

WEB DRAWING (NOT FOR FABRICATION)

UNLESS OTHERWISE SPECIFIED:		NAME	DATE	*DDB Unlimited Inc.*			
DIMENSIONS ARE IN INCHES	Model by:	DDB	11/15/11	OD Family Enclosures			
ANGULAR: MACH ± BEND ± TWO PLACE DECIMAL ± THREE PLACE DECIMAL ±	Drawn by:	aerose	01/08/20	Enclosure, OD, 50, DD			
ALL HOLES PLATED ☐ MATERIAL, FINISH PER ☐	Sales Rep.:	Bryan C.	11/16/11	SIZE	Cage Code:	DWG. NO.:	REV
	Q.A. Appr.:	Matty	04/20/20	D	3S5Y5	00427	D
MATERIAL:	Prod.Mgr.:	ClarkK	04/21/20	SCALE: 1:32	WEIGHT: 151 lbs.	SHEET 1 OF 3	
PAINT:	DO NOT SCALE DRAWING	Control Number:					

DDB FORM 7.1-2 REV.F 05/02/19

UNCLASSIFIED PUBLIC

File Location: (DDB)\EPDM Vault\
C:\DDB\Drawing Requests\Customers\DDB WEB DWG\OD Family WEB\DR-00427 (OD-50DD

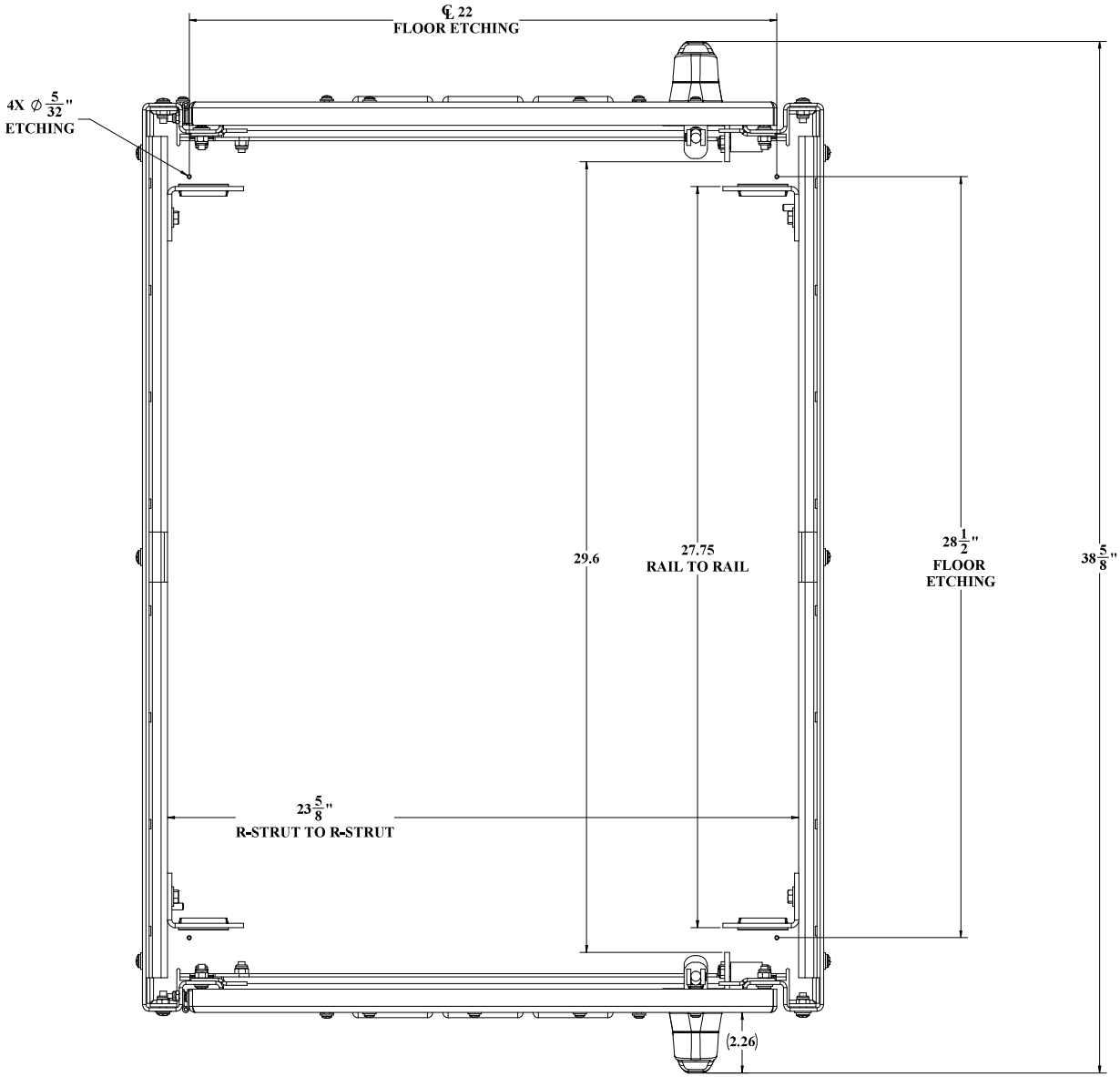

TOP VIEW CEILING AND ALUMASHIELD NOT SHOWN

UNLESS OTHERWISE SPECIFIED:	**DDB Unlimited Inc.**
DIMENSIONS ARE IN INCHES ANGULAR: ±1° FRACTIONAL/NO DECIMAL: ±0.1250 TWO PLACE DECIMAL: ± 0.0500 THREE PLACE DECIMAL: ± 0.0100 ALL HOLES ±0.0050	DD Closed OD Family Enclosure, DD, Closed
MATERIAL: 5052-H32X0.125" ~ASTM-B209-04	SIZE: D | Cage Code: 385Y5 | DWG. NO.: 00427 | REV: D
PAINT: DIAMOND SHIELDRISE ALOE TEXTURE 15-0050	SCALE: 1:32 | WEIGHT: | SHEET 2 OF 3
DO NOT SCALE DRAWING	

DDB FORM 7.1-REV.K 08/02/17

UNCLASSIFIED PUBLIC
THE INFORMATION CONTAINED IN THIS DRAWING IS THE SOLE PROPERTY OF DDB Unlimited, INC. ANY
REPRODUCTION IN PART OR AS A WHOLE WITHOUT THE WRITTEN PERMISSION OF DDB Unlimited, INC. IS PROHIBITED.

File Location: (DDB)(EPDM Vault)
C:\DDB\Drawing Requests\Customers\DDB WEB DWG\OD Family WEB\DR-00427 (OD-50DD)\

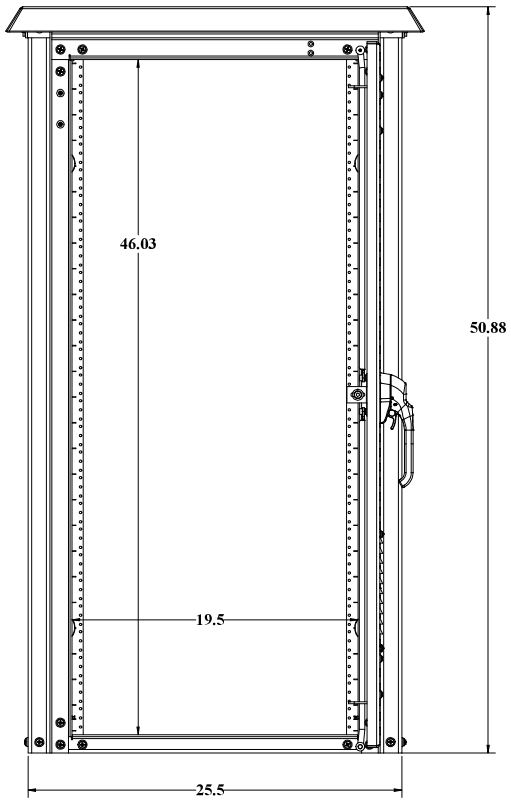

BACK VIEW GASKET NOT SHOWN

UNLESS OTHERWISE SPECIFIED:	DDB Unlimited Inc.		
DIMENSIONS ARE IN INCHES ANGULAR: ±1° FRACTIONAL/NO DECIMAL: ±0.1250 TWO PLACE DECIMAL: ±.01250 THREE PLACE DECIMAL: ±.00500 FOUR PLACE DECIMAL: ±.00100 ALL EDGES #150GRIT	OD-50DD Enclosure, OD, 50, DD		
	SIZE: D	Cage Code: 385Y5	DWG. NO.: 00427 REV: D
MATERIAL: 5052-H32X.125" -ASTM-B209-04	SCALE: 1:32	WEIGHT:	SHEET 3 OF 3
PAINT: HARDCOAT/SEMI-GLOSS BLACK/TEXTURE 15-6078	DO NOT SCALE DRAWING		

DDB FORM 7.1-REV.K 08/02/17

UNCLASSIFIED PUBLIC
THE INFORMATION CONTAINED IN THIS DRAWING IS THE SOLE PROPERTY OF DDB Unlimited, INC. ANY
REPRODUCTION IN PART OR AS A WHOLE WITHOUT THE WRITTEN PERMISSION OF DDB Unlimited, INC. IS PROHIBITED.

File Location: (DDB)(EPDM Vault)
C:\DDB\Drawing Requests\Customers\DDB WEB DWG\OD Family WEB\DR-00427 (OD-50DD)\

An ISO 9001/27001 Certified company

OD Series

OD-50DDXC

Made in America

Believing in American Craftsmanship

15 YEAR WARRANTY

Why Choose the OD Series?

The OD series of enclosures are the ultimate choice for your outdoor racking requirements. Being made of our own rugged Alumiflex®, you'll find it noticeably lighter than steel, yet strong enough to rack even the heaviest equipment. When choosing the OD series, you have handpicked the highest value in American construction. The OD-50DDXC includes the standard features you have come to expect with DDB, incorporating the versatile rail strut (R-Strut) system for adjustable racking, the security of a 3- point locking system and our patented Alumishield® solar cap to manage heat loads. For those who need more than just our standard enclosure, DDB can also make a truly customized solution with our many available options including HVAC, providing a climate-controlled environment for any electronic equipment, electrical load panels and cable entry solutions to name a few. All of this comes together to create an enclosure able to meet all of the unique needs your customers have been seeking. DDB offers a state-of-the-art design, a competitive price, benchmark lead times and a guaranteed delivery, all backed up with an industry leading 15-year warranty on every enclosure. Put DDB's substantial stock to work for you today. Contact our professional staff to assist you with your made-to-order solution.



Features

0.125" Aluminum Construction

Stainless Steel External Hardware/Hinge

3 Point Lock System

Heavy Duty Out-Door Construction

Front and Rear Access

Custom Colors Available

Cream Powder-Coat in Stock

Flexible and Scalable

15 Year Warranty

Quick Shipping

Application Types

Telecommunications
Wireless/Broadband
Fiber Optics
Back Haul
Small Cell/DAS
Public Safety
Utility
Base Station
Military
Trailer-Based Communications
Wi-Fi
LTEE/4G/5G



Environmental & Safety Ratings:

- ✓ NEMA 3R (shown above)
- ✓ NEMA 4 and 4X configurable (not shown)
- ✓ OD-50 Series, ETL environmentally listed to UL 50/50E, Type 4's Available here: https://www.ddbunlimited.com/new-ul-50e-listed/
- ✓ ETL listed; Safety Requirements, UL 62368-1:2019 Ed.3, CSA C22.2

Weight and Dimensions

Approximate Exterior Enclosure Dimensions:

51"H x 28"W x 47"D

Shipping Dimensions:

32"W x 52"L - Palletized

Approximate Shipping Weight:

211 lbs.

2301 S. HWY 77 Pauls Valley, OK 73075
T: (800) 753-8459 – F: (877) 220-7236
sales@ddbunlimited.com www.ddbunlimited.com

An ISO 9001/27001 Certified company

OD Series

OD-50DDXC

Made in America

Believing in American Craftsmanship

15 YEAR WARRANTY

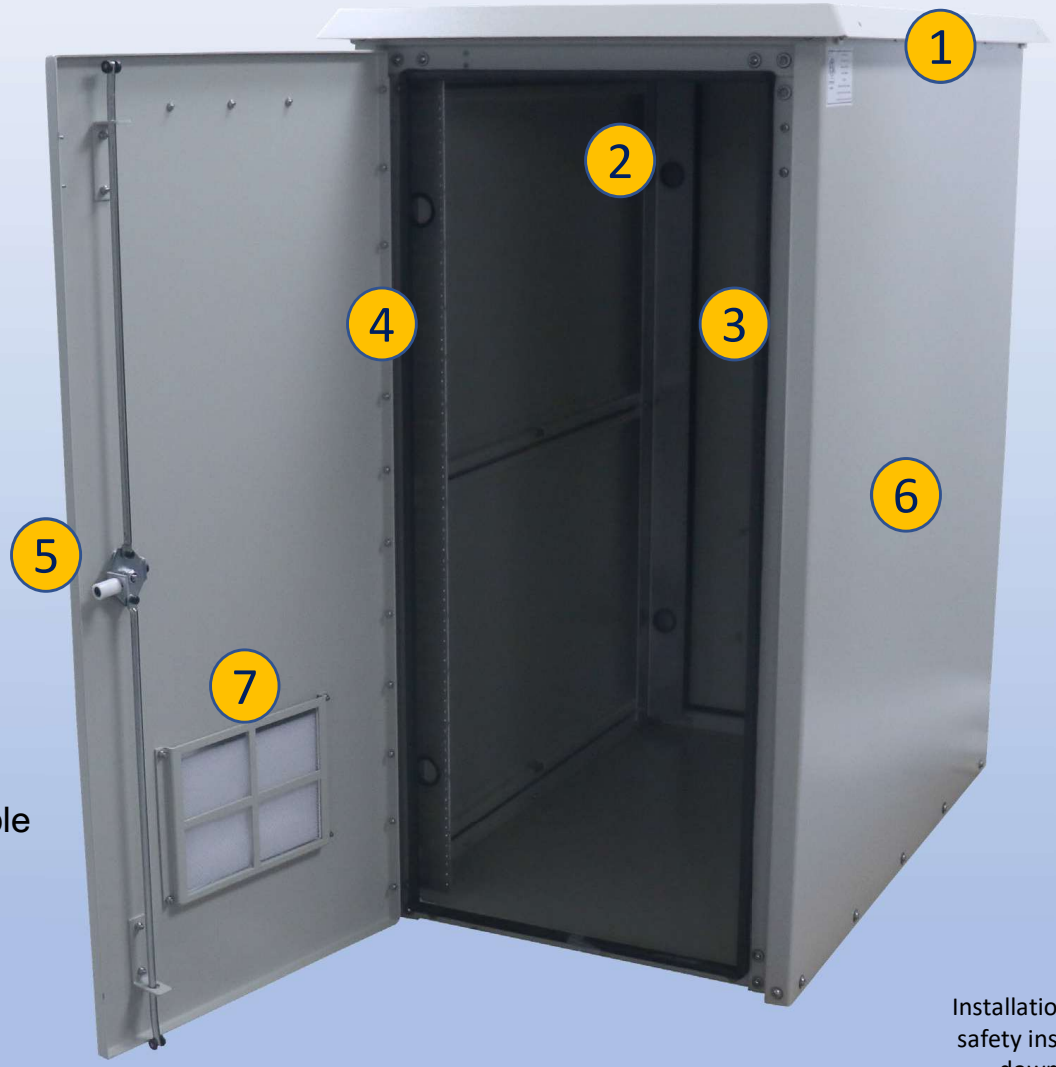

Features

1. Alumishield
2. Front and Rear 19” Adjustable Racking Rails, 52 RU’s
3. Rear Access Door
4. Stainless Steel Door Hinge
5. 3 Point Locking System
6. Powder-Coat Cream
7. Reusable Vent Filters

C ETL US LISTED Intertek

Installation, operating and safety instructions can be downloaded here

Scan this code for replacement parts

2301 S. HWY 77 Pauls Valley, OK 73075
T: (800) 753-8459 – F: (877) 220-7236
sales@ddbunlimited.com www.ddbunlimited.com

Rev C

WEB DRAWING (NOT FOR FABRICATION)

REVISIONS		
REV.	DESCRIPTION	DATE
A	Web Drawing per DR-00425	11/15/2011
B	Add new components and DWG template to WEB DWG per DR-00922	5/12/2014
C	UPDATED TO 2019 FORMAT	3/1/2019
D	UPDATED DRAWING WITH DOOR ROD ROLLERS PER DR-02258	4/8/2020

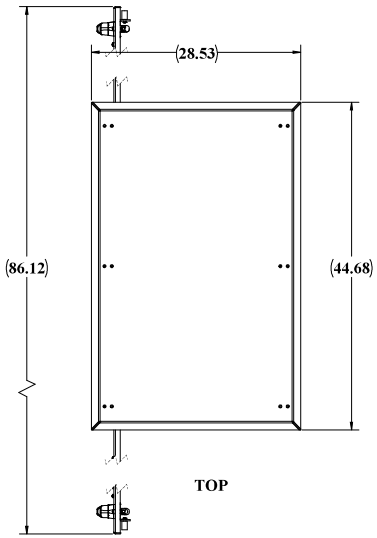

TOP

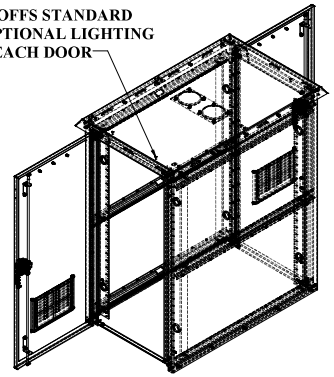

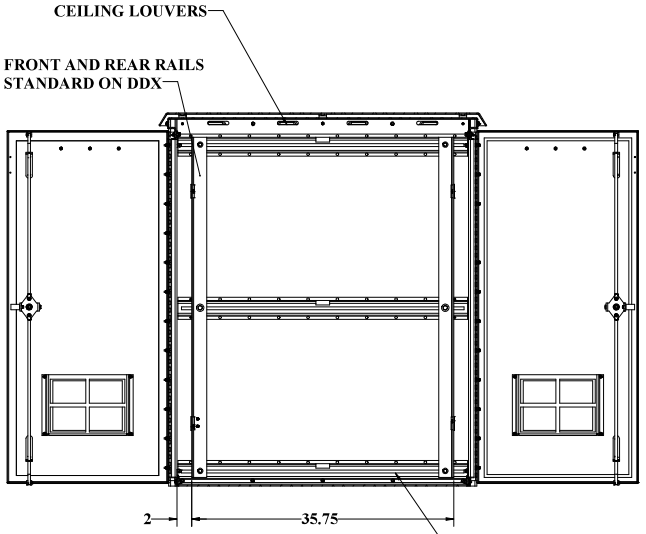

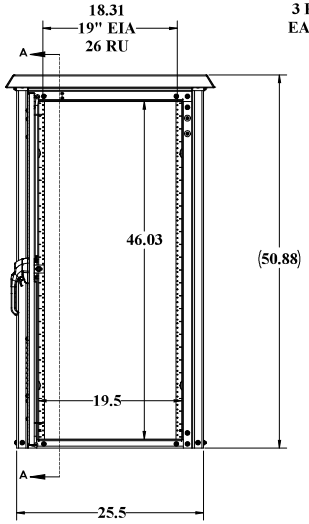

FRONT

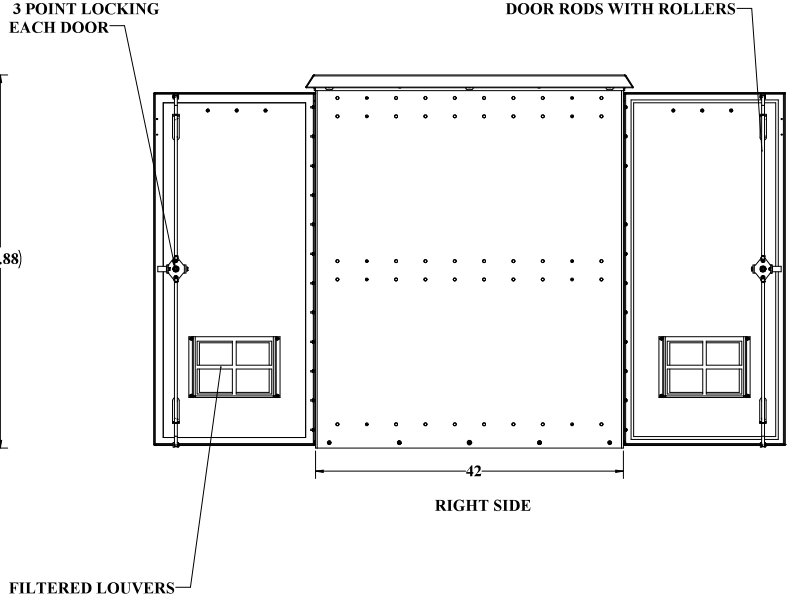

RIGHT SIDE

WEB DRAWING (NOT FOR FABRICATION)

UNLESS OTHERWISE SPECIFIED:		NAME	DATE	DDB Unlimited Inc.			
DIMENSIONS ARE IN INCHES	Model by:	DDB	05/12/14	OD Family Enclosures			
ANGULAR: MACH ± BEND ± TWO PLACE DECIMAL ± THREE PLACE DECIMAL ±	Drawn by:	aerose	04/08/20	Enclosure, OD, 50, DDX			
ALL EDGES BREAK ● MATERIAL, FINISH ETC.	Sales.Rep.	Bryan C.	11/16/11	SIZE	Cage Code:	DWG. NO.:	REV
	Q.A. Appr.	Matty	04/20/20	D	3S5Y5	00428	D
MATERIAL: 5052-H32/5-0.125-0.500-84	Prod.Mgr.	ClarkK	04/21/20				
PAINT:	Control Number:			SCALE: 1:32	WEIGHT: 171 lbs.	SHEET 1 OF 3	
DO NOT SCALE DRAWING							

DDB FORM: 7.1-2 REV:F 05/02/19

UNCLASSIFIED PUBLIC

File Location: (DDB)\EPDM Vault\
C:\DDB\Drawing Requests\Customers\DDB WEB DWG\OD Family WEB\DR-00428 (OD-50DD)

WEB DRAWING (NOT FOR FABRICATION)

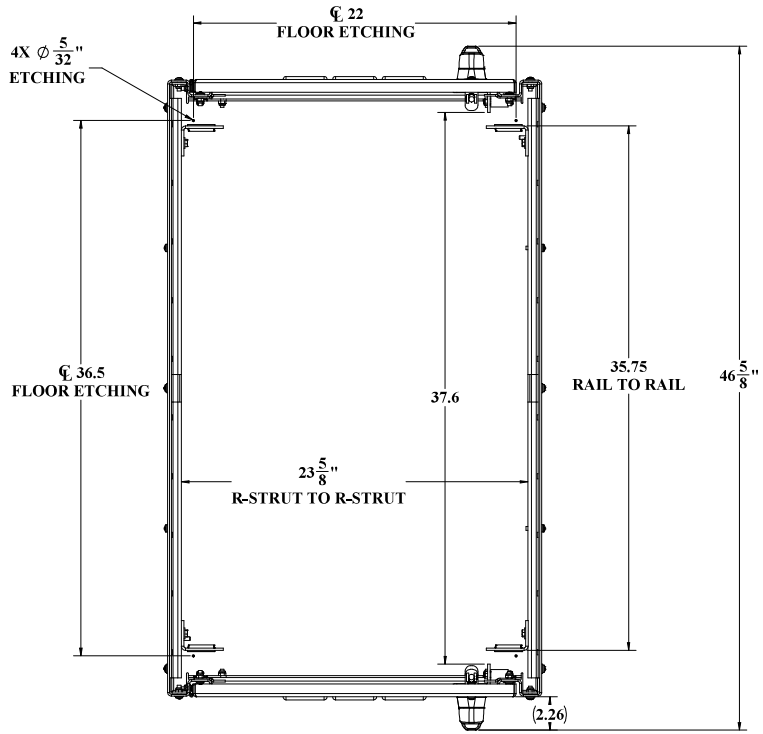

TOP VIEW CEILING AND ALUMASHIELD NOT SHOWN

WEB DRAWING (NOT FOR FABRICATION)

UNLESS OTHERWISE SPECIFIED:	DDB Unlimited Inc.		
DIMENSIONS ARE IN INCHES ANGULAR: ±1° FRACTIONAL/NO DECIMAL: ±0.125 TWO PLACE DECIMAL: ±0.010 THREE PLACE DECIMAL: ±0.005 ALL EDGES #150RMS	DDX Closed OD Family Enclosure, DDX, Closed		
	SIZE: D	Cage Code: 385Y5	DWG. NO.: 00428 REV: D
MATERIAL: 5052-H32-0.125-B209-01	SCALE: 1:32	WEIGHT:	SHEET 2 OF 3
PAINT: DARROW WRINKLE BLACK TEXTURE 15459	DO NOT SCALE DRAWING		

UNCLASSIFIED PUBLIC
THE INFORMATION CONTAINED IN THIS DRAWING IS THE SOLE PROPERTY OF DDB Unlimited, INC. ANY
REPRODUCTION IN PART OR AS A WHOLE WITHOUT THE WRITTEN PERMISSION OF DDB Unlimited, INC. IS PROHIBITED.

File Location: (DDB) [EPDM Vault]
C:\DDB\Drawing Requests\Customers\DDB WEB DWG\OD Family WEB\DR-00428 (OD-50DDX)\

DDB FORM 7.1-7 REV.K 08/02/17

WEB DRAWING (NOT FOR FABRICATION)

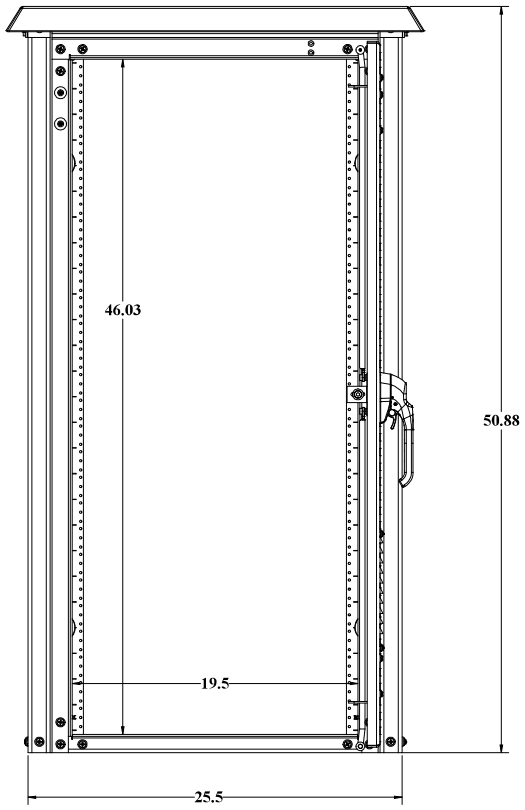

BACK VIEW GASKET NOT SHOWN

WEB DRAWING (NOT FOR FABRICATION)

UNLESS OTHERWISE SPECIFIED:	*DDB Unlimited Inc.*		
DIMENSIONS ARE IN INCHES ANGULAR: ±1° FRACTIONAL: ±0.125 TWO PLACE DECIMAL: ±0.010 THREE PLACE DECIMAL: ±0.005 ALL EDGES #150RMS	OD-50DDX Enclosure, OD, 50, DDX		
	SIZE: D	Cage Code: 38SY5	DWG. NO.: 00428 REV: D
MATERIAL: 5052-H32-0.125-B209-01	SCALE: 1:32	WEIGHT:	SHEET 3 OF 3
PAINT: DIAMOND NAVAL BRONZE, GLOSS TEXTURE 154020			
DO NOT SCALE DRAWING			

DDB FORM 7.1-7 REV.K 08/02/17

UNCLASSIFIED PUBLIC
THE INFORMATION CONTAINED IN THIS DRAWING IS THE SOLE PROPERTY OF DDB Unlimited, INC. ANY
REPRODUCTION IN PART OR AS A WHOLE WITHOUT THE WRITTEN PERMISSION OF DDB Unlimited, INC. IS PROHIBITED.

File Location: (DDB) (EPDM Vault)
C:\DDB\Drawing Requests\Customers\DDB WEB DWG\OD Family WEB\DR-00428 (OD-50DDX)\

ISO 9001 & 27001
Certified company

OD Series

OD-62DXC

Made in America

Believing in American Craftsmanship

Why Choose the OD Series?

The OD series of enclosures are the ultimate choice for your outdoor racking requirements. Being made of our own rugged Alumiflex®, you'll find it noticeably lighter than steel, yet strong enough to rack even the heaviest equipment. When choosing the OD series, you have handpicked the highest value in American construction. The OD-62DXC includes the standard features you have come to expect with DDB, incorporating the versatile rail strut (R-Strut) system for adjustable racking, the security of a 3- point locking system and our patented Alumishield® solar cap to manage heat loads. For those who need more than just our standard enclosure, DDB can also make a truly customized solution with our many available options including HVAC, providing a climate-controlled environment for any electronic equipment, electrical load panels and cable entry solutions to name a few. All of this comes together to create an enclosure able to meet all of the unique needs your customers have been seeking. DDB offers a state-of-the-art design, a competitive price, benchmark lead times and a guaranteed delivery, all backed up with an industry leading 15-year warranty on every enclosure. Put DDB's substantial stock to work for you today. Contact our professional staff to assist you with your made-to-order solution.



Features

0.125" Aluminum Construction

Stainless Steel External Hardware/Hinge

3 Point Lock System

Heavy Duty Out-Door Construction

Front and Rear Access

Custom Colors Available

Cream Powder-Coat in Stock

Flexible and Scalable

15 Year Warranty

Quick Shipping

Application Types

Telecommunications
Wireless/Broadband
Fiber Optics
Back Haul
Small Cell/DAS
Public Safety
Utility
Base Station
Military
Trailer-Based Communications
Wi-Fi
LTEE/4G/5G



Environmental & Safety Ratings:

- ✓ NEMA 3R (shown above)
- ✓ NEMA 4 and 4X configurable (not shown)
- ✓ OD-62 Series, ETL environmentally listed to UL 50/50E, Type 4's
  Available here: https://www.ddbunlimited.com/new-ul-50e-listed/
- ✓ ETL listed; Safety Requirements, UL 62368-1:2019 Ed.3, CSA C22.2

Weight and Dimensions

Approximate Exterior Enclosure Dimensions:

63"H x 28"W x 30"D

Shipping Dimensions:

32"W x 42"L - Palletized

Approximate Shipping Weight:

184 lbs.

2301 S. HWY 77 Pauls Valley, OK 73075
T: (800) 753-8459 – F: (877) 220-7236
sales@ddbunlimited.com www.ddbunlimited.com

ISO 9001 & 27001
Certified company

OD Series

OD-62DXC

Made in America

Believing in American Craftsmanship

15 YEAR WARRANTY



Features

1. Alumishield
2. 19” Adjustable Racking Rails, 33 RU’s
3. Rear Access Door
4. Stainless Steel Door Hinge
5. 3 Point Locking System
6. Powder-Coat Cream
7. Reusable Vent Filters

c ETL US LISTED Intertek

Installation, operating and safety instructions can be downloaded here

Scan this code for replacement parts

2301 S. HWY 77 Pauls Valley, OK 73075
T: (800) 753-8459 – F: (877) 220-7236
sales@ddbunlimited.com www.ddbunlimited.com

Rev C

WEB DRAWING (NOT FOR FABRICATION)

REVISIONS		
REV.	DESCRIPTION	DATE
A	Web Drawing per DR-00425	11/15/2011
B	Add new components and DWG template to WEB DWG per DR-00923	5/12/2014
C	UPDATED DRAWING FORMAT PER DR-01945	5/23/2019
D	UPDATED DRAWING WITH DOOR RODS WITH ROLLERS PER DR-02259	4/9/2020

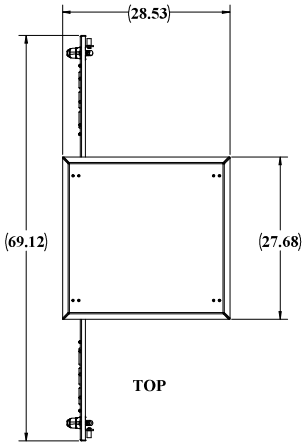

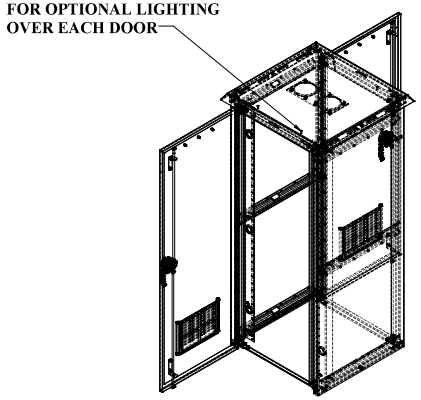

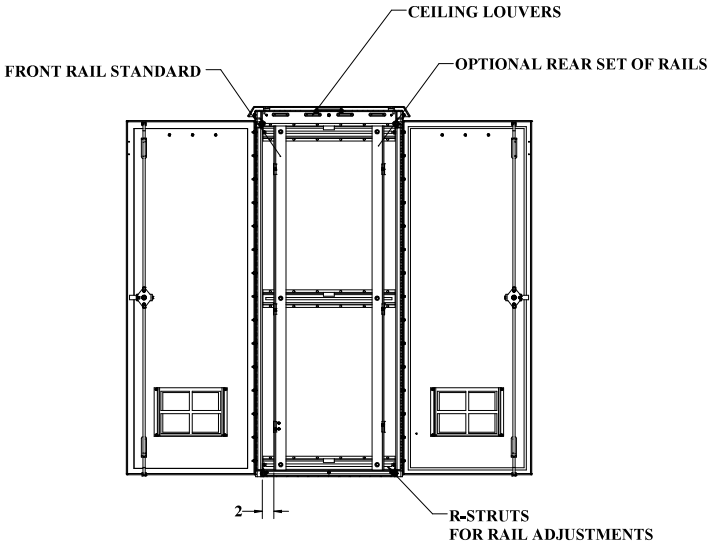

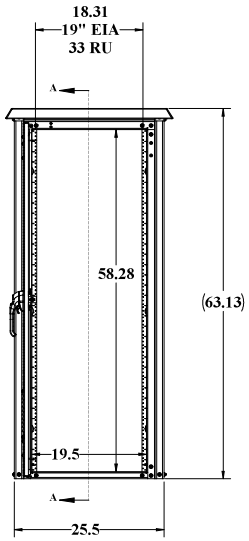

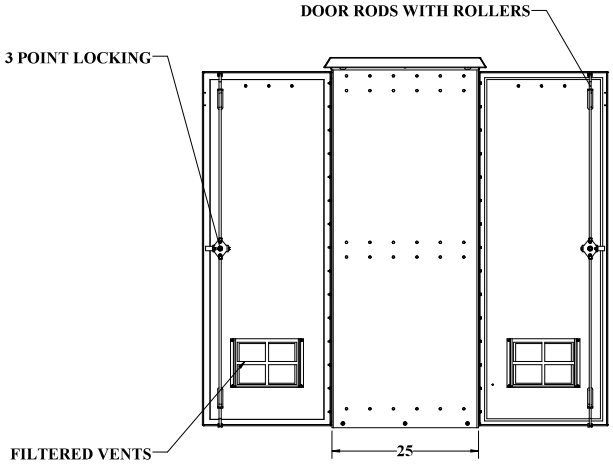

RIGHT SIDE

WEB DRAWING (NOT FOR FABRICATION)

UNLESS OTHERWISE SPECIFIED:		NAME	DATE	DDB Unlimited Inc.			
DIMENSIONS ARE IN INCHES	Modeled by:	DDB	11/15/2011	OD Family Enclosures			
ANGULAR: MACH ± BEND ± TWO PLACE DECIMAL ± THREE PLACE DECIMAL ±	Drawn by:	aerose	04/14/20	Enclosure, OD, 62, DX			
ALL HOLES PLATED ● MATERIAL THICKNESS	Sales Rep.:	Bryan C	11/16/11	SIZE	Cage Code:	DWG. NO.:	REV
	Q.A. Appr.:	Matty	04/20/20	D	3S5Y5	00429	-
MATERIAL: 5052-H32/34 .125" ASTM-B209-14	Prod.Mgr.:	ClarkK	04/21/20				
PAINT:	DO NOT SCALE DRAWING	Control Number:		SCALE: 1:32	WEIGHT: 149 lbs.	SHEET 1 OF 3	

DDB FORM: 7.1-2 REV:F 05/02/19

UNCLASSIFIED PUBLIC

File Location: (DDB)\EPDM Vault\
C:\DDB\Drawing Requests\Customers\DDB WEB DWG\OD Family WEB\DR-00429 (OD-62DX

WEB DRAWING (NOT FOR FABRICATION)

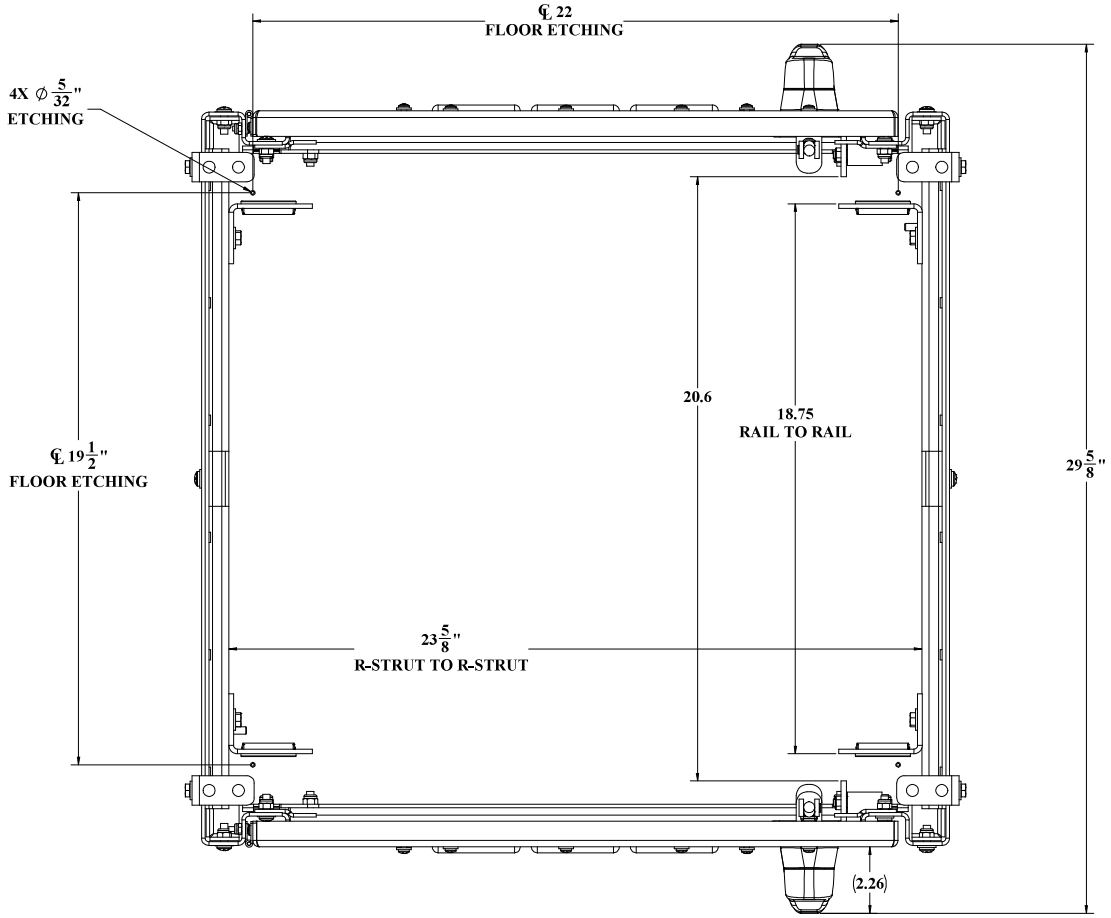

TOP VIEW CEILING AND ALUMASHIELD NOT SHOWN

WEB DRAWING (NOT FOR FABRICATION)

UNLESS OTHERWISE SPECIFIED:	*DDB Unlimited Inc.*		
DIMENSIONS ARE IN INCHES ANGULAR: ±1° FRACTIONAL/NO DECIMAL: ±0.1250 TWO PLACE DECIMAL: ±0.0100 THREE PLACE DECIMAL: ±0.0050 ALL HOLES ±0.0030	DX Closed OD Family Enclosure, DX, Closed		
	SIZE: D	Cage Code: 385Y5	DWG. NO.: 00429 REV: -
MATERIAL: 5052-H32SX0.125" ASTM-B-209-04	SCALE: 1:32	WEIGHT:	SHEET 2 OF 3
PAINT:			
DO NOT SCALE DRAWING			

PROPRIETARY AND CONFIDENTIAL
THE INFORMATION CONTAINED IN THIS DRAWING IS THE SOLE PROPERTY OF DDB Unlimited, INC. ANY REPRODUCTION IN PART OR AS A WHOLE WITHOUT THE WRITTEN PERMISSION OF DDB Unlimited, INC. IS PROHIBITED.

DDB FORM 7.1-REV.K 08/03/17

File Location: (DDB)(EPDM Vault:)
C:\DDB\Drawing Requests\Customers\DDB WEB DWG\OD Family WEB\DR-00429 (OD-62DX)\

WEB DRAWING (NOT FOR FABRICATION)

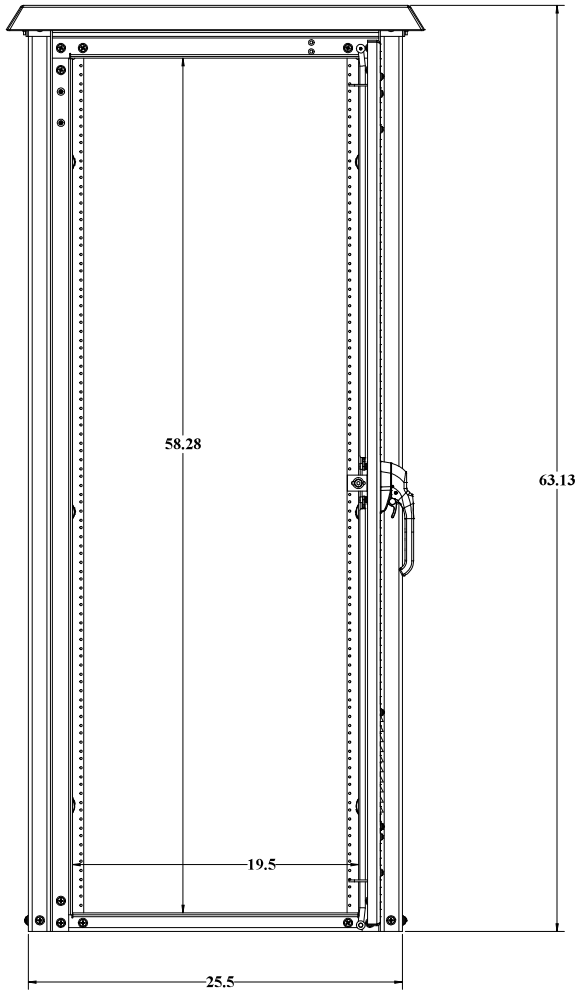

BACK VIEW GASKET NOT SHOWN

WEB DRAWING (NOT FOR FABRICATION)

UNLESS OTHERWISE SPECIFIED:	*DDB Unlimited Inc.*		
DIMENSIONS ARE IN INCHES ANGULAR: ±1° FRACTIONAL/NO DECIMAL: ±0.1250 TWO PLACE DECIMAL: ±0.0500 THREE PLACE DECIMAL: ±0.0100 ALL HOLES ±0.0050	OD-62DX Enclosure, OD, 62, DX		
	SIZE: D	Cage Code: 385Y5	DWG. NO.: 00429 REV: -
MATERIAL: 5052-H32/6XX.125" ASTM-B-209-04	SCALE: 1:32	WEIGHT:	SHEET 3 OF 3
PAINT: SHADOW/OOKL, RUSE SLOSTEXTRI 154859			
DO NOT SCALE DRAWING			

DDB FORM 7.1-REV.K 08/03/17

UNCLASSIFIED PUBLIC
THE INFORMATION CONTAINED IN THIS DRAWING IS THE SOLE PROPERTY OF DDB Unlimited, INC. ANY
REPRODUCTION IN PART OR AS A WHOLE WITHOUT THE WRITTEN PERMISSION OF DDB Unlimited, INC. IS PROHIBITED.

File Location: (DDB)(EPDM Vault)
C:\DDB\Drawing Requests\Customers\DDB WEB DWG\OD Family WEB\DR-00429 (OD-62DX)\

ISO 9001 & 27001
Certified company

OD Series

OD-62DDC

Made in America

Believing in American Craftsmanship

Why Choose the OD Series?

The OD series of enclosures are the ultimate choice for your outdoor racking requirements. Being made of our own rugged Alumiflex®, you'll find it noticeably lighter than steel, yet strong enough to rack even the heaviest equipment. When choosing the OD series, you have handpicked the highest value in American construction. The OD-62DDC includes the standard features you have come to expect with DDB, incorporating the versatile rail strut (R-Strut) system for adjustable racking, the security of a 3-point locking system and our patented Alumishield® solar cap to manage heat loads. For those who need more than just our standard enclosure, DDB can also make a truly customized solution with our many available options including HVAC, providing a climate-controlled environment for any electronic equipment, electrical load panels and cable entry solutions to name a few. All of this comes together to create an enclosure able to meet all of the unique needs your customers have been seeking. DDB offers a state-of-the-art design, a competitive price, benchmark lead times and a guaranteed delivery, all backed up with an industry leading 15-year warranty on every enclosure. Put DDB's substantial stock to work for you today. Contact our professional staff to assist you with your made-to-order solution.

Application Types

Telecommunications
Wireless/Broadband
Fiber Optics
Back Haul
Small Cell/DAS
Public Safety
Utility
Base Station
Military
Trailer-Based Communications
Wi-Fi
LTEE/4G/5G



Environmental & Safety Ratings:

- ✓ NEMA 3R, IP 24 (shown above)
- ✓ NEMA 4 and 4X, IP 66 configurable (not shown)
- ✓ OD-62 Series, ETL environmentally listed to UL 50/50E, Type 4's
  Available here: https://www.ddbunlimited.com/new-ul-50e-listed/
- ✓ ETL listed; Safety Requirements, UL 62368-1:2019 Ed.3, CSA C22.2



Features

0.125" Aluminum Construction
Stainless Steel External Hardware/Hinge
3 Point Lock System
Heavy Duty Out-Door Construction
Front and Rear Access
Custom Colors Available
Cream Powder-Coat in Stock
Flexible and Scalable
15 Year Warranty
Quick Shipping

Weight and Dimensions

Approximate Exterior Enclosure Dimensions:
63"H x 28"W x 39"D
Shipping Dimensions:
32"W x 42"L- Palletized
Approximate Shipping Weight:
216 lbs.

2301 S. HWY 77 Pauls Valley, OK 73075
T: (800) 753-8459 – F: (877) 220-7236
sales@ddbunlimited.com www.ddbunlimited.com

ISO 9001 & 27001
Certified company

OD Series

OD-62DDC

Made in America

Believing in American Craftsmanship

15 YEAR WARRANTY



Features

1. Alumishield
2. Front and Rear 19” Adjustable Racking Rails, 66 RU’s
3. Rear Access Door
4. Stainless Steel Door Hinge
5. 3 Point Locking System
6. Powder-Coat Cream
7. Reusable Vent Filters

C ETL US LISTED Intertek

Installation, operating and safety instructions can be downloaded here

Scan this code for replacement parts

2301 S. HWY 77 Pauls Valley, OK 73075
T: (800) 753-8459 – F: (877) 220-7236
sales@ddbunlimited.com www.ddbunlimited.com

Rev C

WEB DRAWING (NOT FOR FABRICATION)

REVISIONS		
REV.	DESCRIPTION	DATE
A	Web Drawing per DR-00425	11/15/2011
B	Add new components and DWG template to WEB DWG per DR-00924	5/12/2014
C	UPDATED TO 2019 FORMAT	3/4/2019
D	UPDATED DRAWING WITH DOOR RODS WITH ROLLERS PER DR-02260	4/17/2020

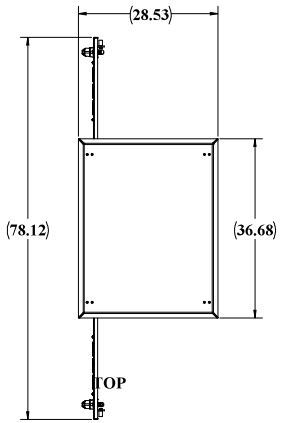

STANDOFFS STANDARD
FOR OPTIONAL LIGHTING
OVER EACH DOOR

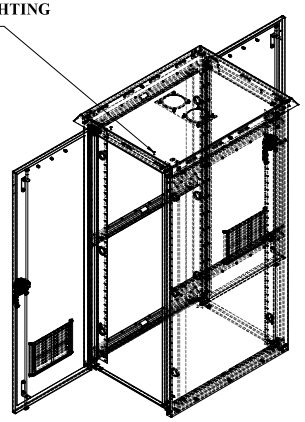

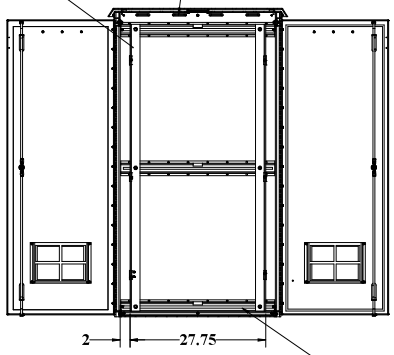

SECTION A-A
SCALE 1 : 12

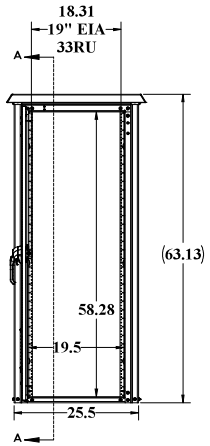

FRONT

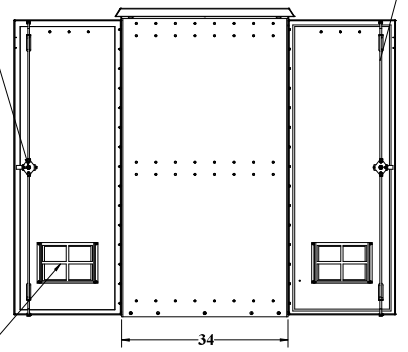

RIGHT SIDE

WEB DRAWING (NOT FOR FABRICATION)

UNLESS OTHERWISE SPECIFIED:		NAME	DATE	DDB Unlimited Inc.			
DIMENSIONS ARE IN INCHES	Model by:	DDB	5/12/2014	OD Family Enclosures			
ANGULAR: MACH ± BEND ± TWO PLACE DECIMAL ± THREE PLACE DECIMAL ±	Drawn by:	Marvin5	03/04/19	Enclosure, OD, 62, DD			
ALL EDGES TO BE SHARP	Sales.Rep.	Bryan C	11/16/11	SIZE	Cage Code:	DWG. NO.:	REV
MATERIAL: FINISH:	Q.A. Appr.	troy	04/21/20	D	3S5Y5	00430	D
MATERIAL: 5052-H32/H34 .125-.1437-0.5309-.144	Prod.Mgr.	ClarkK	04/21/20				
PAINT:	Control Number:			SCALE: 1:32	WEIGHT: 174 lbs.	SHEET 1 OF 3	
DO NOT SCALE DRAWING							

DDB FORM: 7.1-2 REV:F 05/02/19

UNCLASSIFIED PUBLIC

File Location: (DDB)\EPDM Vault\
C:\DDB\Drawing Requests\Customers\DDB WEB DWG\OD Family WEB\DR-00430 (OD-62DD

WEB DRAWING (NOT FOR FABRICATION)

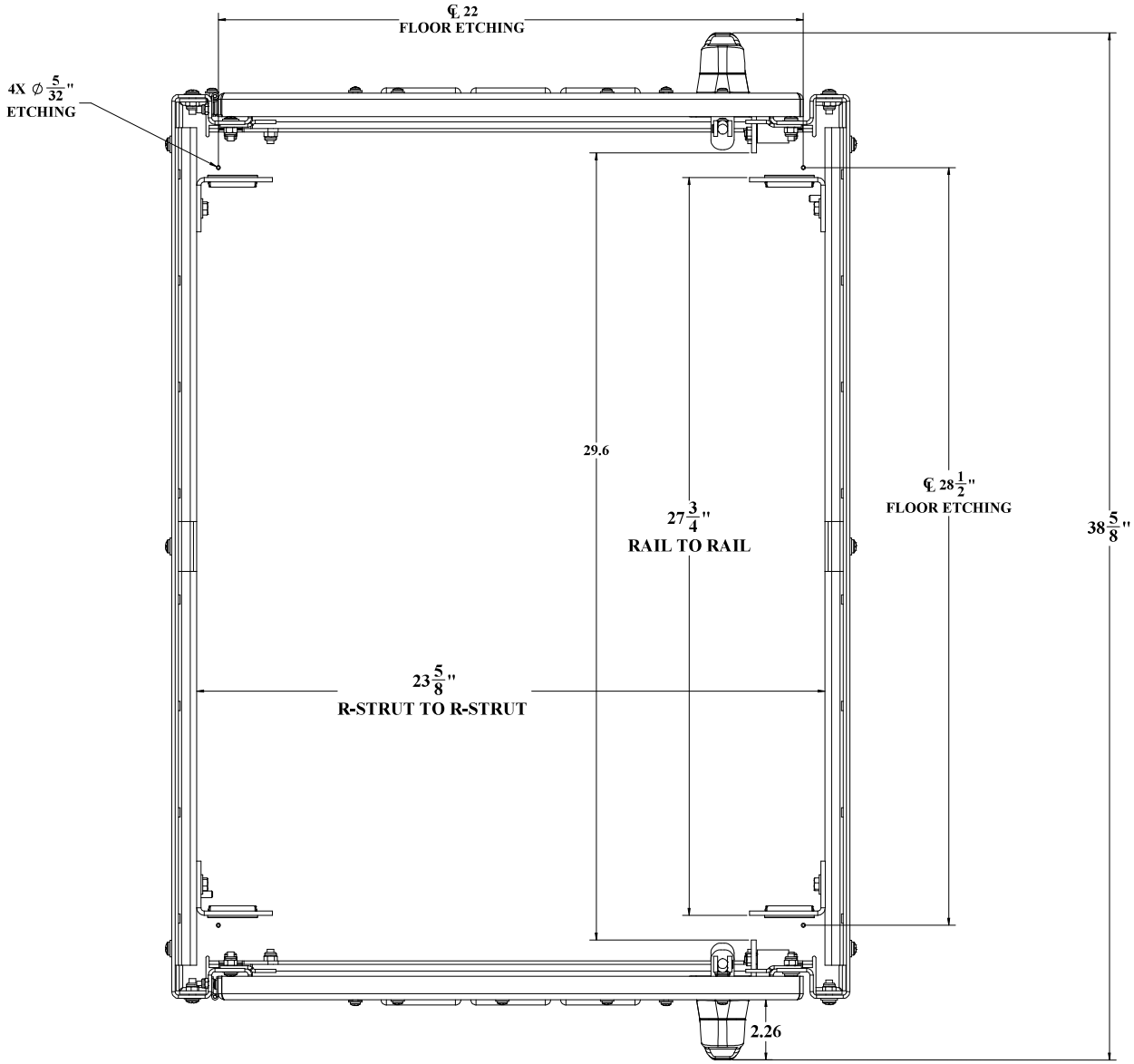

TOP VIEW CEILING AND ALUMASHIELD NOT SHOWN

WEB DRAWING (NOT FOR FABRICATION)

UNLESS OTHERWISE SPECIFIED:	DDB Unlimited Inc.		
DIMENSIONS ARE IN INCHES ANGULAR: ±1° FRACTIONAL/NO DECIMAL: ±0.125 TWO PLACE DECIMAL: ±0.030 TWO PLACE DECIMAL: ± 0.010 THREE PLACE DECIMAL: ± 0.005 ALL HOLES ±0.005	DD Closed OD Family Enclosure, DD, Closed		
	SIZE: D	Cage Code: 385Y5	DWG. NO.: 00430 REV: D
MATERIAL: 5052-H32 0.125-ASTM-B209-14M	SCALE: 1:32	WEIGHT:	SHEET 2 OF 3
PAINT: DIAMOND WHITE, SEMI-GLOSS TEXTURE CS4020	DO NOT SCALE DRAWING		

DDB FORM 7.1-7 REV.K 08/02/17

UNCLASSIFIED PUBLIC
THE INFORMATION CONTAINED IN THIS DRAWING IS THE SOLE PROPERTY OF DDB Unlimited, INC. ANY
REPRODUCTION IN PART OR AS A WHOLE WITHOUT THE WRITTEN PERMISSION OF DDB Unlimited, INC. IS PROHIBITED.

File Location: (DDB)(EPDM Vault)
C:\DDB\Drawing Requests\Customers\DDB WEB DWG\OD Family WEB\DR-00430 (OD-62DD)\

WEB DRAWING (NOT FOR FABRICATION)

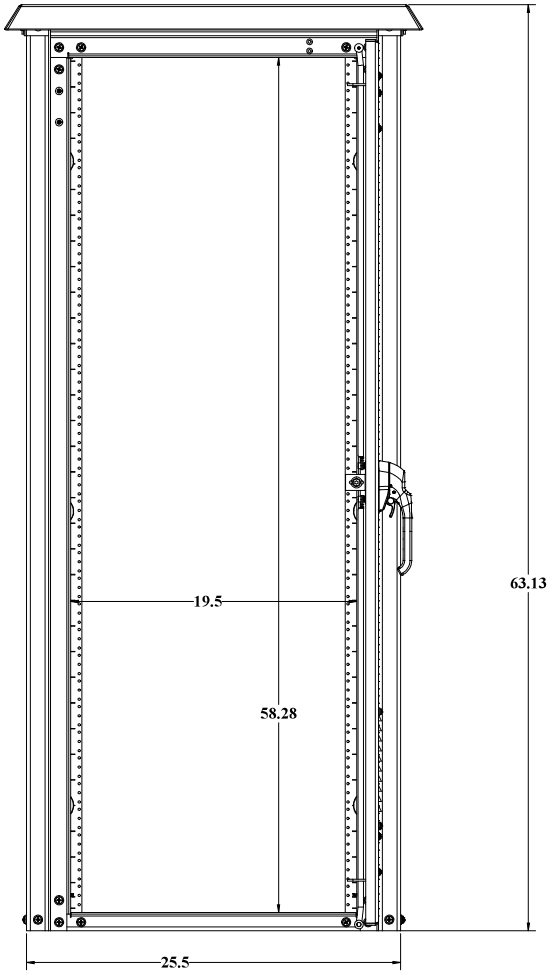

BACK VIEW GASKET NOT SHOWN

WEB DRAWING (NOT FOR FABRICATION)

UNLESS OTHERWISE SPECIFIED:	*DDB Unlimited Inc.*		
DIMENSIONS ARE IN INCHES ANGULAR: ±1° FRACTIONAL/NO DECIMAL: ±0.1250 TWO PLACE DECIMAL: ±0.0500 THREE PLACE DECIMAL: ±0.0100 ALL HOLES ±0.0010	OD-62DD Enclosure, OD, 62, DD		
	SIZE: D	Cage Code: 3S5Y5	DWG. NO.: 00430 REV: D
MATERIAL: 5052-H32/6XX.X-T6-ASTM-B209-14/4			
PAINT: DIAMOND TOOLHEDGE GLOSS TEXTURE LS4020	SCALE: 1:32	WEIGHT:	SHEET 3 OF 3
DO NOT SCALE DRAWING			

DDB FORM 7.1-REV.K 08/02/17

UNCLASSIFIED PUBLIC
THE INFORMATION CONTAINED IN THIS DRAWING IS THE SOLE PROPERTY OF DDB Unlimited, INC. ANY
REPRODUCTION IN PART OR AS A WHOLE WITHOUT THE WRITTEN PERMISSION OF DDB Unlimited, INC. IS PROHIBITED.

File Location: (DDB)(EPDM Vault)
C:\DDB\Drawing Requests\Customers\DDB WEB DWG\OD Family WEB\DR-00430 (OD-62DD)\

An ISO 9001/27001 Certified company

OD Series

OD-62DDXC

Made in America

Believing in American Craftsmanship

15 YEAR WARRANTY

Why Choose the OD Series?

The OD series of enclosures are the ultimate choice for your outdoor racking requirements. Being made of our own rugged Alumiflex®, you'll find it noticeably lighter than steel, yet strong enough to rack even the heaviest equipment. When choosing the OD series, you have handpicked the highest value in American construction. The OD-62DDXC includes the standard features you have come to expect with DDB, incorporating the versatile rail strut (R-Strut) system for adjustable racking, the security of a 3- point locking system and our patented Alumishield® solar cap to manage heat loads. For those who need more than just our standard enclosure, DDB can also make a truly customized solution with our many available options including HVAC, providing a climate-controlled environment for any electronic equipment, electrical load panels and cable entry solutions to name a few. All of this comes together to create an enclosure able to meet all of the unique needs your customers have been seeking. DDB offers a state-of-the-art design, a competitive price, benchmark lead times and a guaranteed delivery, all backed up with an industry leading 15-year warranty on every enclosure. Put DDB's substantial stock to work for you today. Contact our professional staff to assist you with your made-to-order solution.



Application Types

Telecommunications
Wireless/Broadband
Fiber Optics
Back Haul
Small Cell/DAS
Public Safety
Utility
Base Station
Military
Trailer-Based Communications
Wi-Fi
LTEE/4G/5G



Environmental & Safety Ratings:

- ✓ NEMA 3R, IP 24 (shown above)
- ✓ NEMA 4 and 4X, IP 66 configurable (not shown)
- ✓ OD-62 Series, ETL environmentally listed to UL 50/50E, Type 4's Available here: https://www.ddbunlimited.com/new-ul-50e-listed/
- ✓ ETL listed; Safety Requirements, UL 62368-1:2019 Ed.3, CSA C22.2

Features

0.125" Aluminum Construction
Stainless Steel External Hardware/Hinge
3 Point Lock System
Heavy Duty Out-Door Construction
Front and Rear Access
Custom Colors Available
Cream Powder-Coat in Stock
Flexible and Scalable
15 Year Warranty
Quick Shipping

Weight and Dimensions

Approximate Exterior Enclosure Dimensions:
63"H x 28"W x 47"D
Shipping Dimensions:
32"W x 52"L- Palletized
Approximate Shipping Weight:
241 lbs.

2301 S. HWY 77 Pauls Valley, OK 73075
T: (800) 753-8459 – F: (877) 220-7236
sales@ddbunlimited.com www.ddbunlimited.com

An ISO 9001/27001 Certified company

OD Series

OD-62DDXC

Made in America

Believing in American Craftsmanship

15 YEAR WARRANTY



Features

1. Alumishield
2. Front and Rear 19” Adjustable Racking Rails, 66 RU’s
3. Rear Access Door
4. Stainless Steel Door Hinge
5. 3 Point Locking System
6. Powder-Coat Cream
7. Reusable Vent Filters

ETL LISTED C US Intertek

Installation, operating and safety instructions can be downloaded here

Scan this code for replacement parts

2301 S. HWY 77 Pauls Valley, OK 73075
T: (800) 753-8459 – F: (877) 220-7236
sales@ddbunlimited.com www.ddbunlimited.com

Rev C

WEB DRAWING (NOT FOR FABRICATION)

REVISIONS		
REV.	DESCRIPTION	DATE
A	Web Drawing per DR-00425	11/15/2011
B	Add new components and DWG template to WEB DWG per DR-00925	5/12/2014
C	UPDATED TO 2019 FORMAT	3/4/2019
D	UPDATED FORMAT AND DRAWING TO SHOW NEW DOOR RODS.	4/15/2020

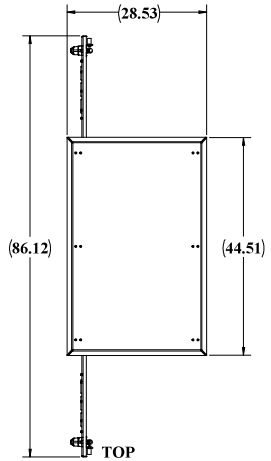

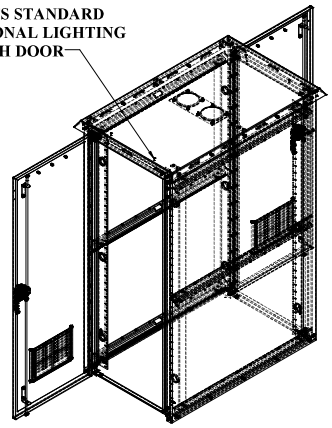

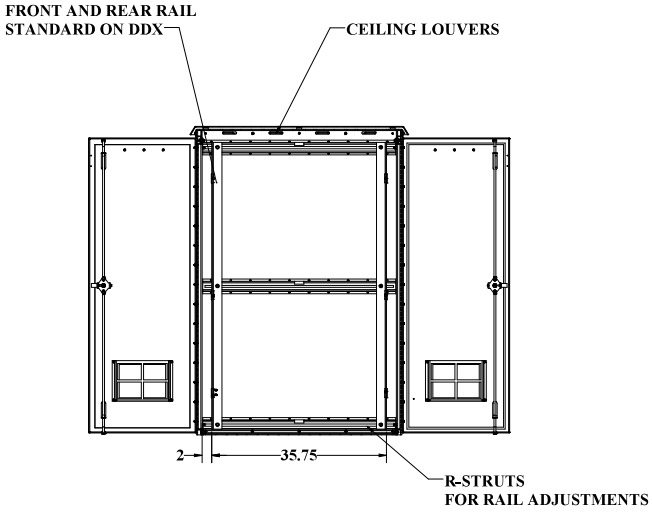

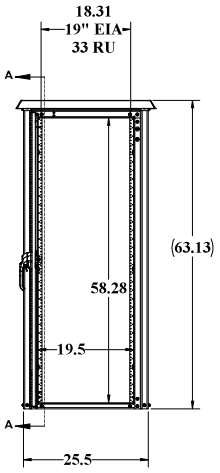

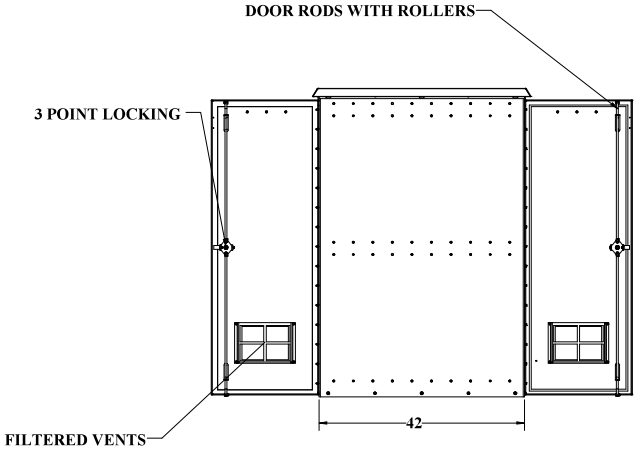

DDB FORM 7.1-2 REV.F 05/02/19

WEB DRAWING (NOT FOR FABRICATION)

UNLESS OTHERWISE SPECIFIED:		NAME	DATE	DDB Unlimited Inc.			
DIMENSIONS ARE IN INCHES	Model by:	DDB	5/12/2014	OD Family Enclosures			
ANGULAR: MACH ± BEND ± TWO PLACE DECIMAL ± THREE PLACE DECIMAL ±	Drawn by:	Marvin5	03/04/19	Enclosure, OD, 62, DDX			
ALL EDGES BREAK ● MATERIAL FINISH BURR ±	Sales Rep.:	Bryan C	11/16/11	SIZE	Cage Code:	DWG. NO.:	REV
MATERIAL: 5052-H32/0.125-ASTM-B209-04	Q.A. Appr.:	tony	04/21/20	D	3S5Y5	00431	D
PAINT: BAKED90 VOGEL BEIGE GLOSS TEXTURE/ SATIN	Prod.Mgr.:	ClarkK	04/21/20	SCALE: 1:32	WEIGHT: 197 lbs.		SHEET 1 OF 3
DO NOT SCALE DRAWING	Control Number:						

UNCLASSIFIED PUBLIC

File Location: (DDB)\PDM Vault\
C:\DDB\Drawing Requests\Customers\DDB WEB DWG\OD Family WEB\DR-00431 (OD-62DD)

WEB DRAWING (NOT FOR FABRICATION)

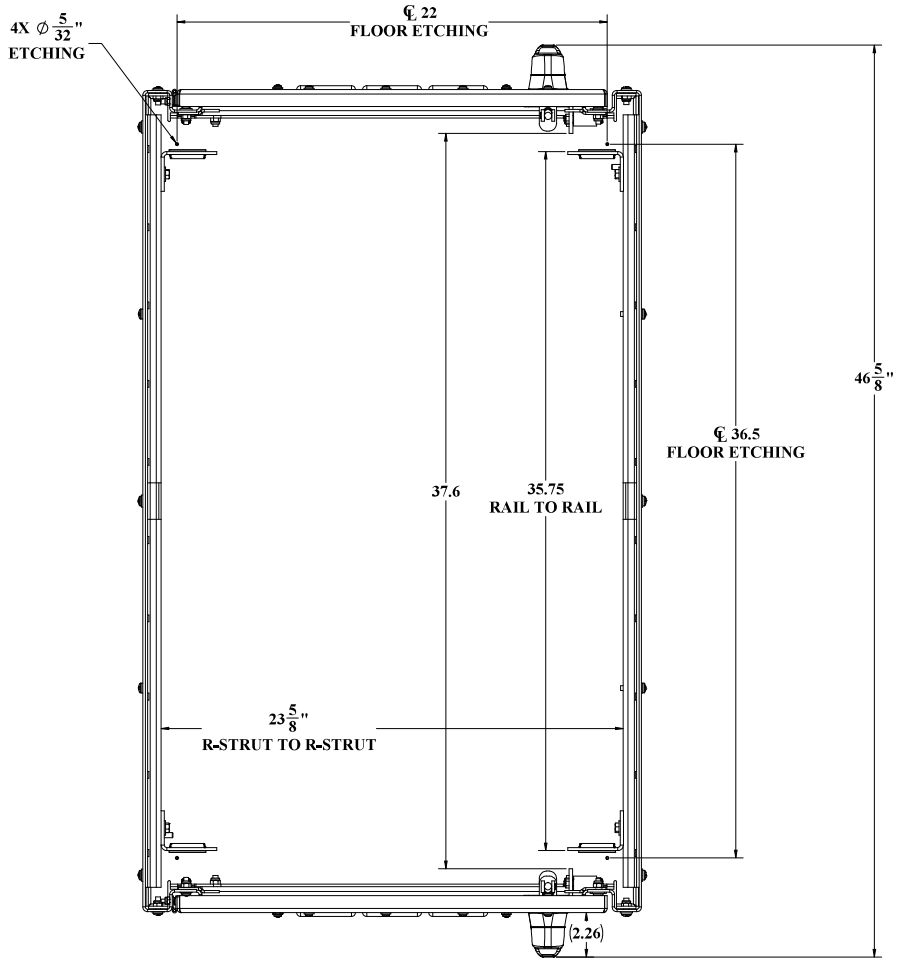

TOP VIEW CEILING AND ALUMASHIELD NOT SHOWN

WEB DRAWING (NOT FOR FABRICATION)

UNLESS OTHERWISE SPECIFIED:	***DDB Unlimited Inc.***
DIMENSIONS ARE IN INCHES ANGULAR: ±1° FRACTIONAL/NO DECIMAL: ±0.1250 TWO PLACE DECIMAL: ±0.0500 THREE PLACE DECIMAL: ±0.0100 ALL HOLES ±0.0050	DDX Closed OD Family Enclosure, DDX, Closed
MATERIAL: 5052-H32 SAE 2.5% ASTM-B209-04	SIZE: D; Cage Code: 38SY5; DWG. NO.: 00431; REV: D
PAINT: DIAMOND NAVEL, HIAE 14.0.01 TEXTURE-0.5-MED	SCALE: 1:32 WEIGHT: SHEET 2 OF 3
DO NOT SCALE DRAWING	

DDB FORM 7.1-REV.K 08/02/17

UNCLASSIFIED PUBLIC
THE INFORMATION CONTAINED IN THIS DRAWING IS THE SOLE PROPERTY OF DDB Unlimited, INC. ANY
REPRODUCTION IN PART OR AS A WHOLE WITHOUT THE WRITTEN PERMISSION OF DDB Unlimited, INC. IS PROHIBITED.

File Location: (DDB) (EPDM Vault)
C:\DDB\Drawing Requests\Customers\DDB WEB DWG\OD Family WEB\DR-00431 (OD-62DDX)\

WEB DRAWING (NOT FOR FABRICATION)

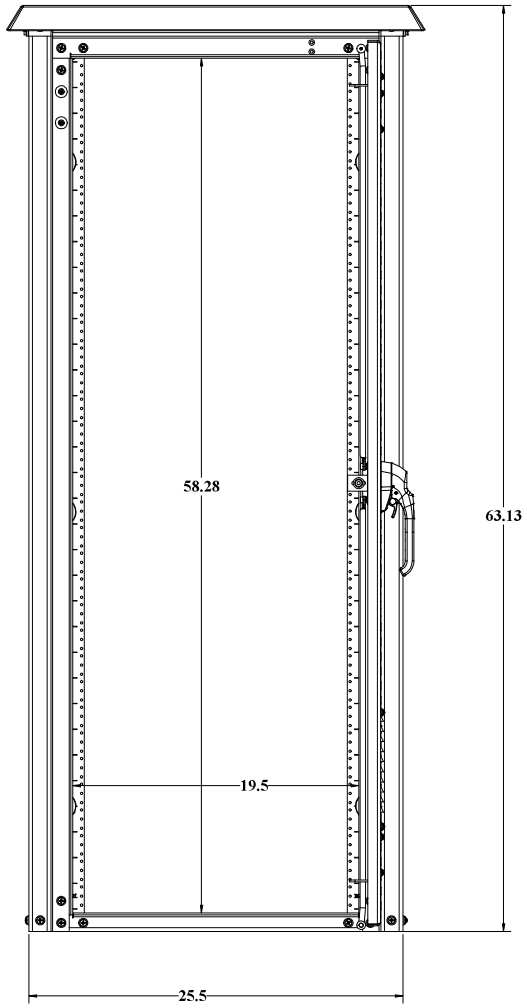

BACK VIEW GASKET NOT SHOWN

WEB DRAWING (NOT FOR FABRICATION)

UNLESS OTHERWISE SPECIFIED: DIMENSIONS ARE IN INCHES. ANGULAR: FRACTIONAL: ±1/64 TWO PLACE DECIMAL: ±.010 THREE PLACE DECIMAL: ±.005. ALL EDGES ##SHARP	*DDB Unlimited Inc.* OD-62DDX Enclosure, OD, 62, DDX		
	SIZE: D	Cage Code: 385Y5	DWG. NO.: 00431 REV: D
MATERIAL: 5052-H32/ASTM B209-04	SCALE: 1:32	WEIGHT:	SHEET 3 OF 3
PAINT: DIAMOND VOGEL HEAT-X-OH TI OTHS-054050	DO NOT SCALE DRAWING		

DDB FORM 7.1-REV.K 08/02/17

UNCLASSIFIED PUBLIC
THE INFORMATION CONTAINED IN THIS DRAWING IS THE SOLE PROPERTY OF DDB Unlimited, INC. ANY REPRODUCTION IN PART OR AS A WHOLE WITHOUT THE WRITTEN PERMISSION OF DDB Unlimited, INC. IS PROHIBITED.

File Location: (DDB) [EPDM Vault]
C:\DDB\Drawing Requests\Customers\DDB WEB DWG\OD Family WEB\DR-00431 (OD-62DDX)\

An ISO 9001/27001 Certified company

OD Series

OD-78DXC

Made in America

Believing in American Craftsmanship

15 YEAR WARRANTY

Why Choose the OD Series?

The OD series of enclosures are the ultimate choice for your outdoor racking requirements. Being made of our own rugged Alumiflex®, you'll find it noticeably lighter than steel, yet strong enough to rack even the heaviest equipment. When choosing the OD series, you have handpicked the highest value in American construction. The OD-78DXC includes the standard features you have come to expect with DDB, incorporating the versatile rail strut (R-Strut) system for adjustable racking, the security of a 3- point locking system and our patented Alumishield® solar cap to manage heat loads. For those who need more than just our standard enclosure, DDB can also make a truly customized solution with our many available options including HVAC, providing a climate-controlled environment for any electronic equipment, electrical load panels and cable entry solutions to name a few. All of this comes together to create an enclosure able to meet all of the unique needs your customers have been seeking. DDB offers a state-of-the-art design, a competitive price, benchmark lead times and a guaranteed delivery, all backed up with an industry leading 15-year warranty on every enclosure. Put DDB's substantial stock to work for you today. Contact our professional staff to assist you with your made-to-order solution.



Features

0.125" Aluminum Construction

Stainless Steel External Hardware/Hinge

3 Point Lock System

Heavy Duty Out-Door Construction

Front and Rear Access

Custom Colors Available

Cream Powder-Coat in Stock

Flexible and Scalable

15 Year Warranty

Quick Shipping

Application Types

Telecommunications
Wireless/Broadband
Fiber Optics
Back Haul
Small Cell/DAS
Public Safety
Utility
Base Station
Military
Trailer-Based Communications
Wi-Fi
LTEE/4G/5G



Environmental & Safety Ratings:

- ✓ NEMA 3R, IP 24 (shown above)
- ✓ NEMA 4 and 4X, IP 66 configurable (not shown)
- ✓ OD-78 Series, ETL environmentally listed to UL 50/50E, Type 4's
  Available here: https://www.ddbunlimited.com/new-ul-50e-listed/
- ✓ ETL listed; Safety Requirements, UL 62368-1:2019 Ed.3, CSA C22.2

Weight and Dimensions

Approximate Exterior Enclosure Dimensions:

79"H x 28"W x 30"D

Shipping Dimensions:

32"W x 42"L- Palletized

Approximate Shipping Weight:

208 lbs.

2301 S. HWY 77 Pauls Valley, OK 73075
T: (800) 753-8459 – F: (877) 220-7236
sales@ddbunlimited.com www.ddbunlimited.com

OD Series

OD-78DXC

An ISO 9001/27001 Certified company

Made in America

Believing in American Craftsmanship

15 YEAR WARRANTY

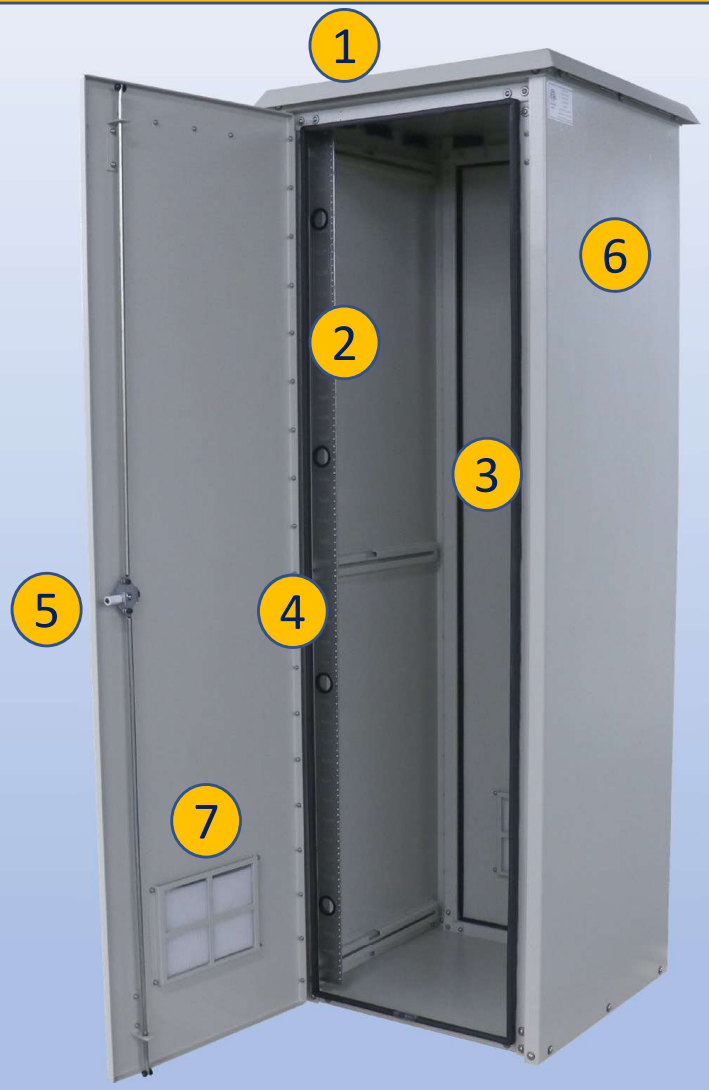

Features

1. Alumishield
2. Front 19” Adjustable Racking Rails, 42 RU’s
3. Rear Access Door
4. Stainless Steel Door Hinge
5. 3-Point Locking System
6. Powder-Coat Cream
7. Reusable Vent Filters

Rev C

2301 S. HWY 77 Pauls Valley, OK 73075
T: (800) 753-8459 – F: (877) 220-7236
sales@ddbunlimited.com www.ddbunlimited.com

ETL LISTED C US Intertek

Installation, operating and safety instructions can be downloaded here

Scan this code for replacement parts

WEB DRAWING (NOT FOR FABRICATION)

REVISIONS		
REV.	DESCRIPTION	DATE
A	Web Drawing per DR-00425	11/15/2011
B	Add new components and DWG template to WEB DWG per DR-00926	5/12/2014
C	UPDATED TO 2019 FORMAT	3/4/2019
D	UPDATED DRAWING WITH DOOR RODS PER DR-02262	4/17/2020

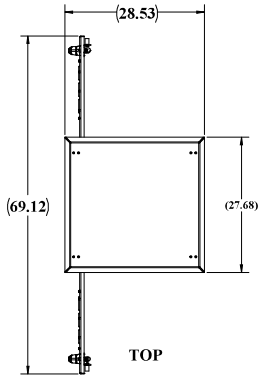

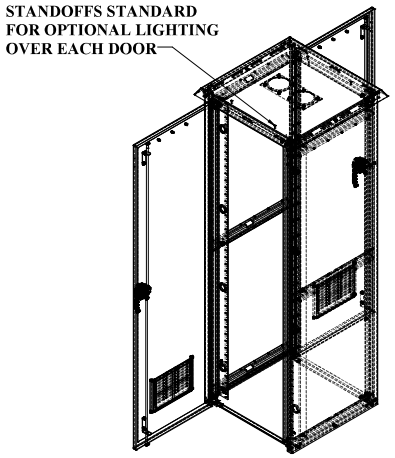

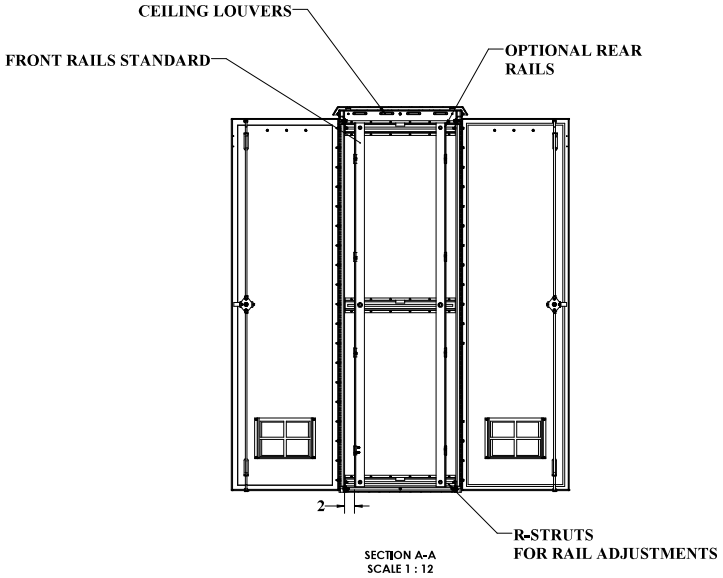

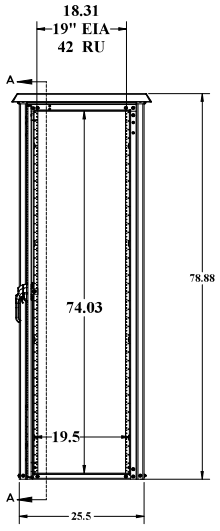

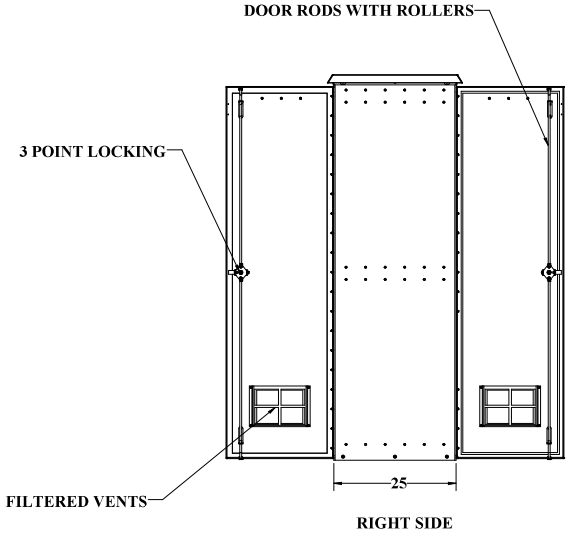

WEB DRAWING (NOT FOR FABRICATION)

UNLESS OTHERWISE SPECIFIED:		NAME	DATE	DDB Unlimited Inc.			
DIMENSIONS ARE IN INCHES	Model by:	DDB	5/12/2014	OD Family Enclosures			
ANGULAR: MACH ± BEND ± TWO PLACE DECIMAL ± THREE PLACE DECIMAL ±	Drawn by:	Marvin5	03/04/19	Enclosure, OD, 78, DX			
ALL EDGES BREAK ● MATERIAL THICKNESS ±	Sales Rep.	Bryan C	11/16/11	SIZE	Cage Code:	DWG. NO.:	REV
MATERIAL: 5052-H32/T6 .125-ASTM-B209-04	Q.A. Appr.	Marty	04/20/20	D	3S5Y5	00432	D
PAINT:	Prod. Mgr.	ClarkK	04/21/20	SCALE: 1:32	WEIGHT: 176 lbs.		SHEET 1 OF 3
DO NOT SCALE DRAWING	Control Number:						

DDB FORM 7.1-2 REV:F 05/02/19

UNCLASSIFIED PUBLIC

File Location: (DDB)\EPDM Vault\
C:\DDB\Drawing Requests\Customers\DDB WEB DWG\OD Family WEB\DR-00432 (OD-78DX

WEB DRAWING (NOT FOR FABRICATION)

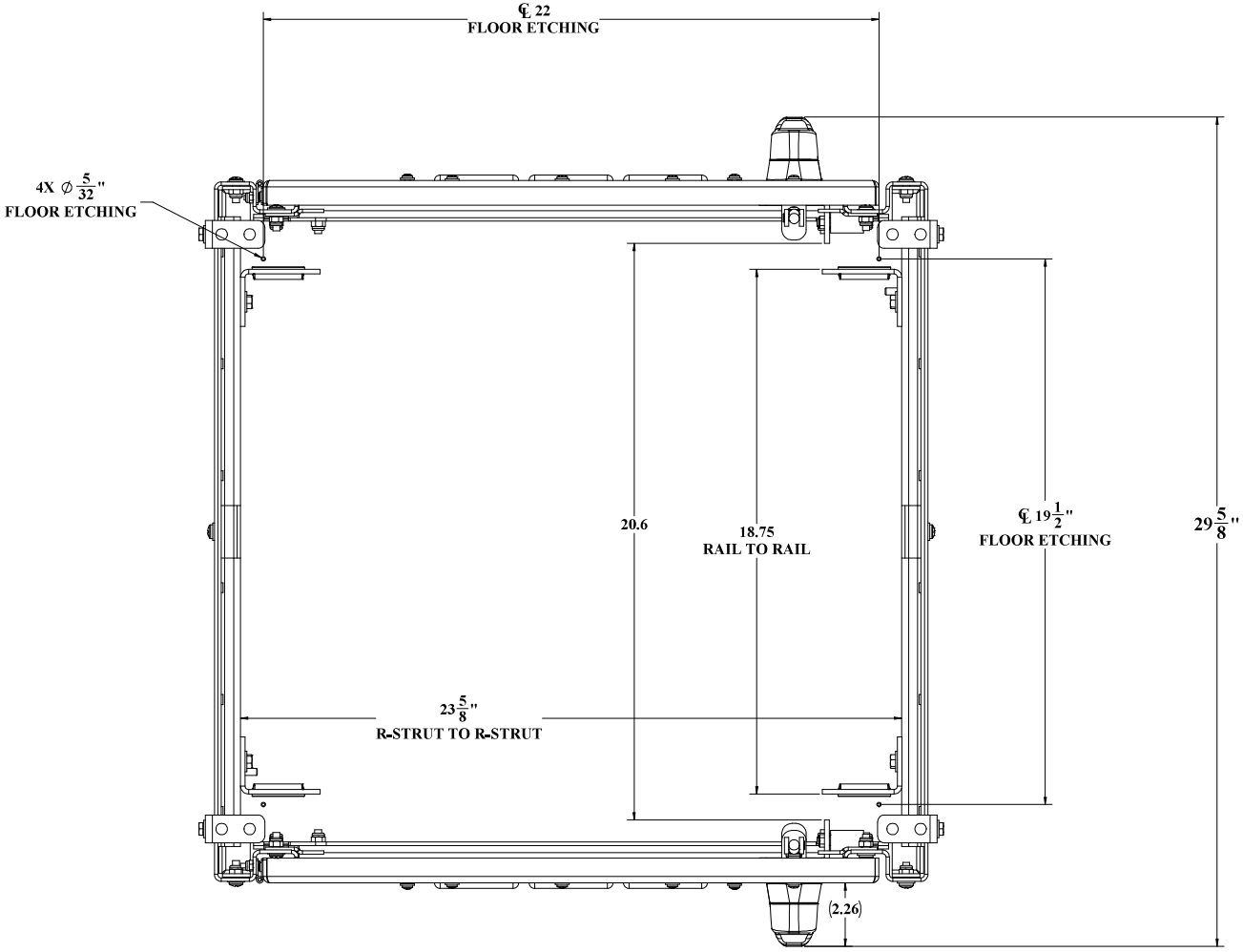

TOP VIEW CEILING AND ALUMASHIELD NOT SHOWN

DDB FORM 7.1-7 REV K 08/02/17

WEB DRAWING (NOT FOR FABRICATION)

UNLESS OTHERWISE SPECIFIED:	DDB Unlimited Inc.		
DIMENSIONS ARE IN INCHES ANGULAR: ±1° FRACTIONAL/NO DECIMAL: ±0.1250 TWO PLACE DECIMAL: ±0.0100 TWO PLACE DECIMAL: ±0.0050 THREE PLACE DECIMAL: ±0.0030 ALL EDGES #180GRIT	DX Closed OD Family Enclosure, DX, Closed		
	SIZE: D	Cage Code: 38SY5	DWG. NO.: 00432 REV: D
MATERIAL: 5052-H32/GR.125-ASTM-B209-04	SCALE: 1:32	WEIGHT:	SHEET 2 OF 3
PAINT: DIAMOND NAVAL/SEMI GLOSS TEXTURE 154-020	DO NOT SCALE DRAWING		

UNCLASSIFIED PUBLIC
THE INFORMATION CONTAINED IN THIS DRAWING IS THE SOLE PROPERTY OF DDB Unlimited, INC. ANY REPRODUCTION IN PART OR AS A WHOLE WITHOUT THE WRITTEN PERMISSION OF DDB Unlimited, INC. IS PROHIBITED.

File Location: (DDB)(EPDM Vault)
C:\DDB\Drawing Requests\Customers\DDB WEB DWG\OD Family WEB\DR-00432 (OD-78DX)\

WEB DRAWING (NOT FOR FABRICATION)

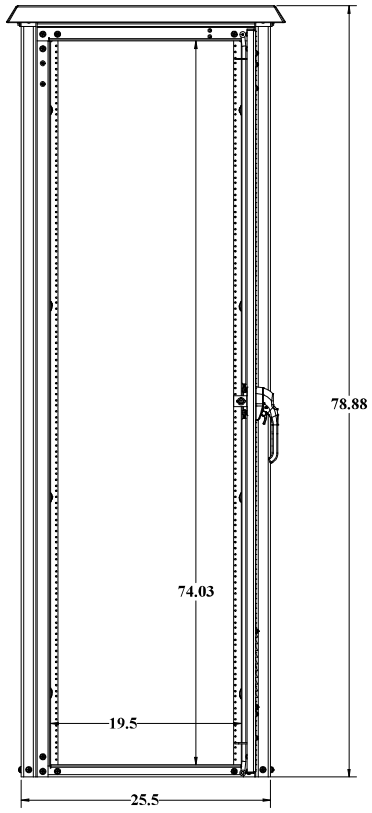

BACK VIEW GASKET NOT SHOWN

WEB DRAWING (NOT FOR FABRICATION)

UNLESS OTHERWISE SPECIFIED:	*DDB Unlimited Inc.*		
DIMENSIONS ARE IN INCHES ANGULAR: ±1° FRACTIONAL/NO DECIMAL: ±0.1250 TWO PLACE DECIMAL: ±0.0100 THREE PLACE DECIMAL: ±0.0050 ALL EDGES #180GRIT	OD-78DX Enclosure, OD, 78, DX		
	SIZE: D	Cage Code: 385Y5	DWG. NO.: 00432 REV: D
MATERIAL: 5052-H32/GR.125-ASTM-B209-04	SCALE: 1:32	WEIGHT:	SHEET 3 OF 3
PAINT: DIAMOND NAVAL/SEMI GLOSS TEXTURE 154020			
DO NOT SCALE DRAWING			

DDB FORM 7.1-7 REV.K 08/03/17

UNCLASSIFIED PUBLIC
THE INFORMATION CONTAINED IN THIS DRAWING IS THE SOLE PROPERTY OF DDB Unlimited, INC. ANY
REPRODUCTION IN PART OR AS A WHOLE WITHOUT THE WRITTEN PERMISSION OF DDB Unlimited, INC. IS PROHIBITED.

File Location: (DDB)(EPDM Vault)
C:\DDB\Drawing Requests\Customers\DDB WEB DWG\OD Family WEB\DR-00432 (OD-78DX)\

ISO 9001 & 27001
Certified company

OD Series

OD-78DDC

Made in America

Believing in American Craftsmanship

Why Choose the OD Series?

The OD series of enclosures are the ultimate choice for your outdoor racking requirements. Being made of our own rugged Alumiflex®, you'll find it noticeably lighter than steel, yet strong enough to rack even the heaviest equipment. When choosing the OD series, you have handpicked the highest value in American construction. The OD-78DDC includes the standard features you have come to expect with DDB, incorporating the versatile rail strut (R-Strut) system for adjustable racking, the security of a 3- point locking system and our patented Alumishield® solar cap to manage heat loads. For those who need more than just our standard enclosure, DDB can also make a truly customized solution with our many available options including HVAC, providing a climate-controlled environment for any electronic equipment, electrical load panels and cable entry solutions to name a few. All of this comes together to create an enclosure able to meet all of the unique needs your customers have been seeking. DDB offers a state-of-the-art design, a competitive price, benchmark lead times and a guaranteed delivery, all backed up with an industry leading 15-year warranty on every enclosure. Put DDB's substantial stock to work for you today. Contact our professional staff to assist you with your made-to-order solution.



Application Types

Telecommunications
Wireless/Broadband
Fiber Optics
Back Haul
Small Cell/DAS
Public Safety
Utility
Base Station
Military
Trailer-Based Communications
Wi-Fi
LTEE/4G/5G



Environmental & Safety Ratings:

- ✓ NEMA 3R, IP 24 (shown above)
- ✓ NEMA 4 and 4X, IP 66 configurable , (not shown)
- ✓ OD-78 Series, ETL environmentally listed to UL 50/50E, Type 4's
  Available here: https://www.ddbunlimited.com/new-ul-50e-listed/
- ✓ ETL listed; Safety Requirements, UL 62368-1:2019 Ed.3, CSA C22.2

Features

0.125" Aluminum Construction
Stainless Steel External Hardware/Hinge
3 Point Lock System
Heavy Duty Out-Door Construction
Front and Rear Access
Custom Colors Available
Cream Powder-Coat in Stock
Flexible and Scalable
15 Year Warranty
Quick Shipping

Weight and Dimensions

Approximate Exterior Enclosure Dimensions:
79"H x 28"W x 39"D
Shipping Dimensions:
32"W x 42"L- Palletized
Approximate Shipping Weight:
250 lbs.

2301 S. HWY 77 Pauls Valley, OK 73075
T: (800) 753-8459 – F: (877) 220-7236
sales@ddbunlimited.com www.ddbunlimited.com

ISO 9001 & 27001
Certified company

OD Series

OD-78DDC

Made in America

Believing in American Craftsmanship

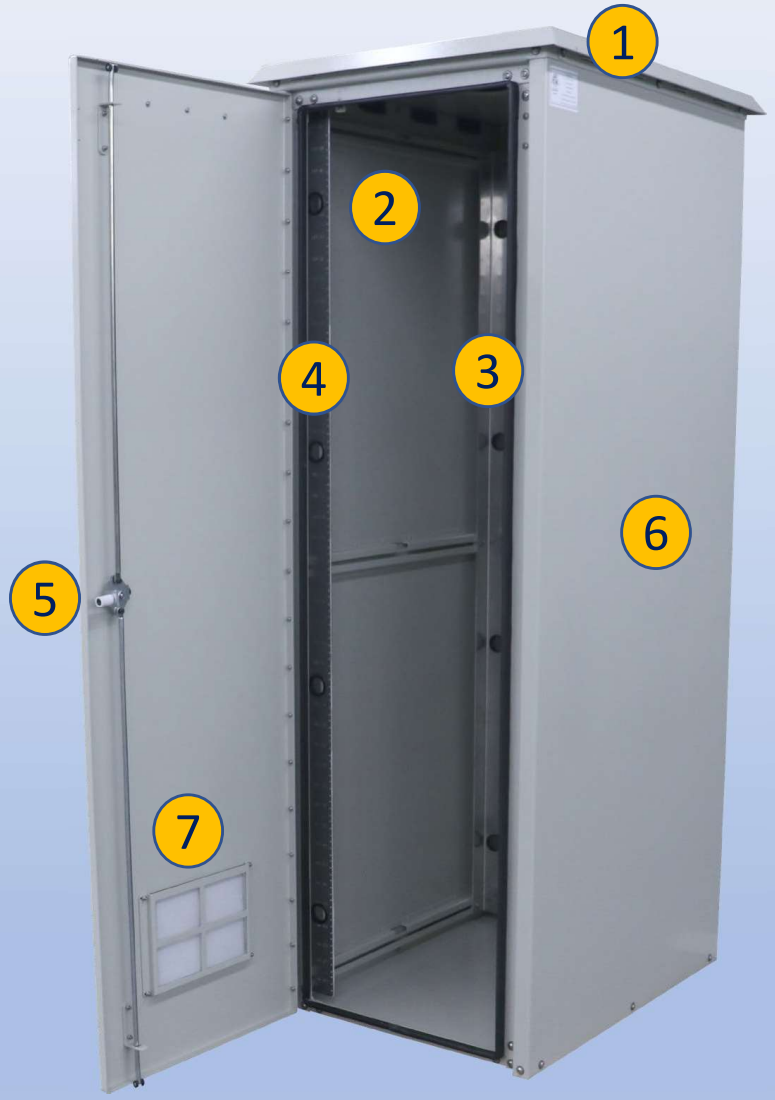

Features

1. Alumishield
2. Front and Rear 19” Adjustable Racking Rails, 84 RU’s
3. Rear Access Door
4. Stainless Steel Door Hinge
5. 3 Point Locking System
6. Powder-Coat Cream
7. Reusable Vent Filters

Installation, operating and safety instructions can be downloaded here

Scan this code for replacement parts

2301 S. HWY 77 Pauls Valley, OK 73075
T: (800) 753-8459 – F: (877) 220-7236
sales@ddbunlimited.com www.ddbunlimited.com

Rev C

WEB DRAWING (NOT FOR FABRICATION)

REVISIONS		
REV.	DESCRIPTION	DATE
A	Web Drawing per DR-00425	11/15/2011
B	Add new components and DWG template to WEB DWG per DR-00927	5/12/2014
C	UPDATED TO 2019 FORMAT	3/4/2019
D	UPDATED DRAWING WITH DOOR RODS WITH ROLLERS PER DR-02263	4/17/2020

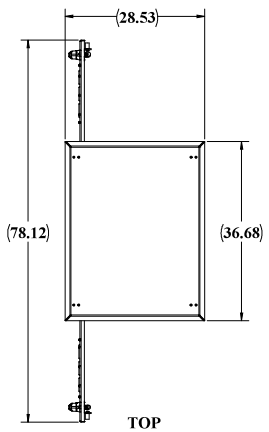

TOP

STANDOFFS STANDARD FOR OPTIONAL LIGHTING OVER EACH DOOR

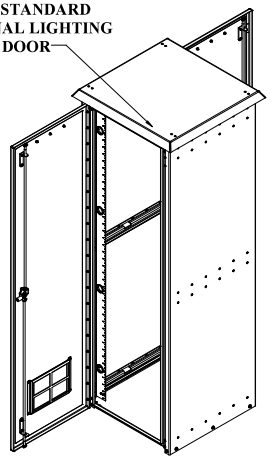

FRONT AND REAR RAIL STANDARD ON DD

CEILING LOUVERS

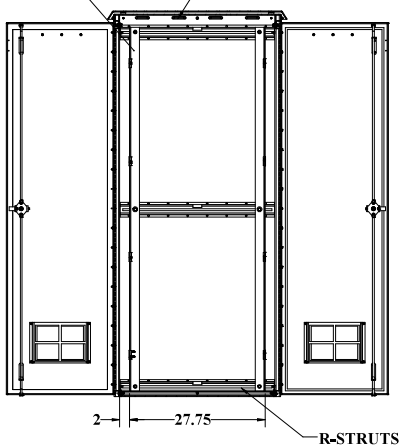

R-STRUTS FOR RAIL ADJUSTMENTS

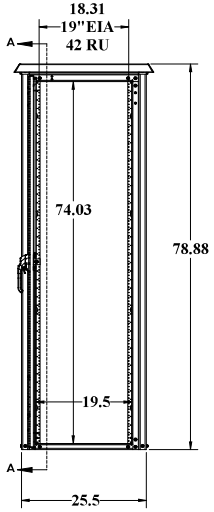

FRONT

DOOR RODS WITH ROLLERS

3 POINT LOCKING

FILTERED VENTS

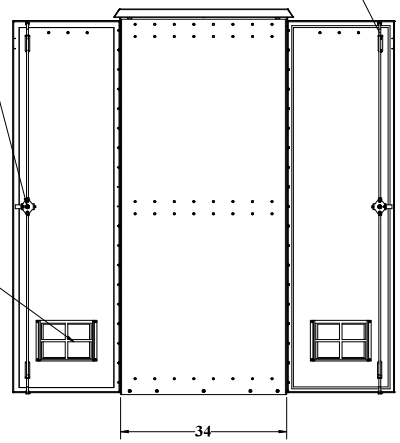

RIGHT SIDE

WEB DRAWING (NOT FOR FABRICATION)

UNLESS OTHERWISE SPECIFIED:		NAME	DATE	DDB Unlimited Inc.			
DIMENSIONS ARE IN INCHES	Modeled by:	DDB	5/12/2014	OD Family Enclosures			
ANGULAR: MACH ± BEND ± TWO PLACE DECIMAL ± THREE PLACE DECIMAL ±	Drawn by:	Marvin S	03/04/19	Enclosure, OD, 78, DD			
ALL EDGES BREAK ● MATERIAL THICKNESS ±	Sales Rep.:	Bryan C	11/16/11	SIZE	Cage Code:	DWG. NO.:	REV
MATERIAL: 5052-H32/0.125-AATM-B309-01	Q.A. Appr.:	Matty	04/20/20	D	3S5Y5	00433	D
PAINT: BASECOAT/CLEAR VISUAL HUES CLASS TEXTURE-154TG	Prod.Mgr.:	ClarkK	04/21/20	SCALE: 1:32	WEIGHT: 203 lbs.		SHEET 1 OF 3
DO NOT SCALE DRAWING	Control Number:						

DDB FORM: 7.1-2 REV:F 05/02/19

UNCLASSIFIED PUBLIC

File Location: (DDB)\EPDM Vault\
C:\DDB\Drawing Requests\Customers\DDB WEB DWG\OD Family WEB\DR-00433 (OD-78DD

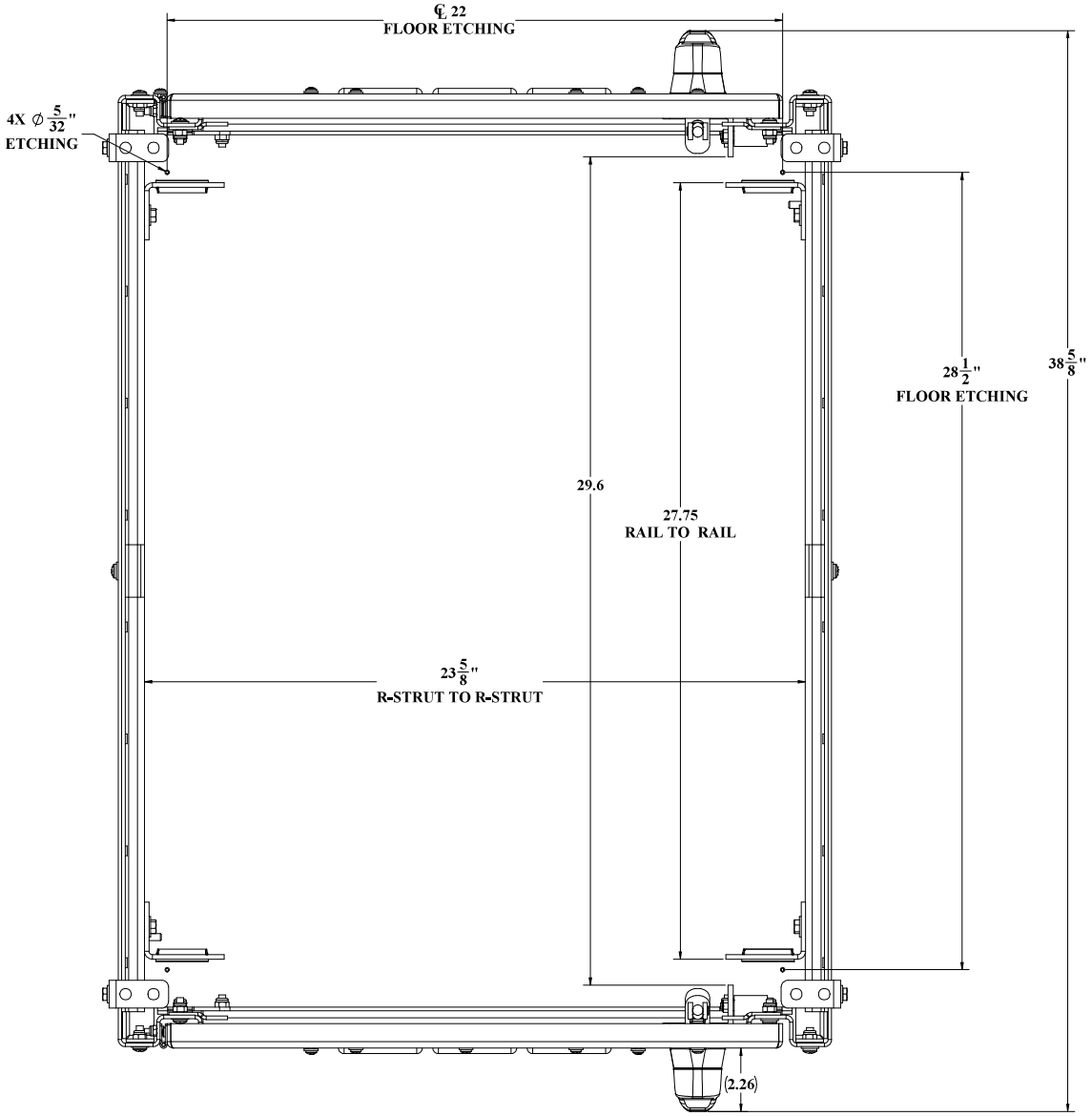

TOP VIEW CEILING AND ALUMASHIELD NOT SHOWN

UNLESS OTHERWISE SPECIFIED:	DDB Unlimited Inc.		
DIMENSIONS ARE IN INCHES ANGULAR: ±1° FRACTIONAL/NO DECIMAL: ±0.1250 ONE PLACE DECIMAL: ± 0.0500 TWO PLACE DECIMAL: ± 0.0250 THREE PLACE DECIMAL: ± 0.0100 ALL EDGES #180SB	DD Closed OD Family Enclosure, DD, Closed		
	SIZE: D	Cage Code: 385Y5	DWG. NO.: 00433	REV: D
MATERIAL: 5052-H32XB [25-ASTM-B209-04]	SCALE: 1:32	WEIGHT:		SHEET 2 OF 3
PAINT: DIAMOND VOGEL-SEMI-GLOSS ILUSTRA-254050	DO NOT SCALE DRAWING			

DDB FORM 7.1-REV.K 08/02/17

UNCLASSIFIED PUBLIC
THE INFORMATION CONTAINED IN THIS DRAWING IS THE SOLE PROPERTY OF DDB Unlimited, INC. ANY
REPRODUCTION IN PART OR AS A WHOLE WITHOUT THE WRITTEN PERMISSION OF DDB Unlimited, INC. IS PROHIBITED.

File Location: (DDB)(EPDM Vault)
C:\DDB\Drawing Requests\Customers\DDB WEB DWG\OD Family WEB\DR-00433 (OD-78DD)\

WEB DRAWING (NOT FOR FABRICATION)

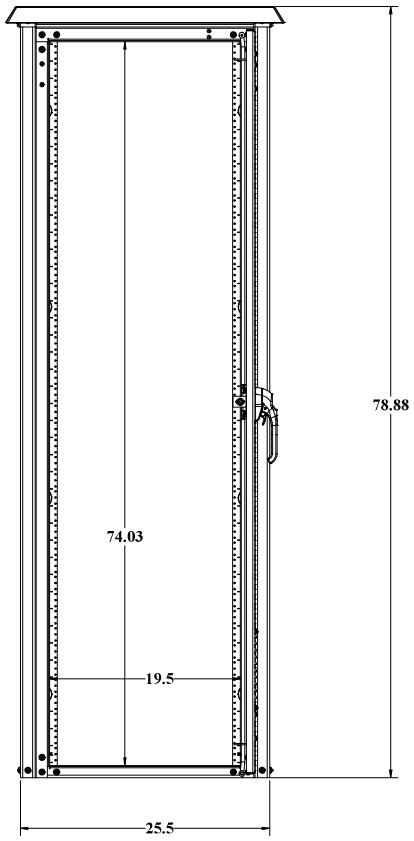

BACK VIEW GASKET NOT SHOWN

DDB FORM 7.1-7 REV.K 08/02/17

WEB DRAWING (NOT FOR FABRICATION)

UNLESS OTHERWISE SPECIFIED: DIMENSIONS ARE IN INCHES. ANGULAR: ±1° FRACTIONAL/NO DECIMAL: ±0.1250 TWO PLACE DECIMAL: ±0.0100 TWO PLACE DECIMAL: ±0.0050 THREE PLACE DECIMAL: ±0.0030 ALL EDGES #150SQ	***DDB Unlimited Inc.*** OD-78DD **Enclosure, OD, 78, DD**		
	SIZE: D	Cage Code: 3S5Y5	DWG. NO.: 00433 REV: D
MATERIAL: 5052-H32/6XX.IT5-ASTM-B209-04	SCALE: 1:32	WEIGHT:	SHEET 3 OF 3
PAINT: DIAMOND VOGEL SERGE GLOSS TEXTURE 67-6050	DO NOT SCALE DRAWING		

UNCLASSIFIED PUBLIC
THE INFORMATION CONTAINED IN THIS DRAWING IS THE SOLE PROPERTY OF DDB Unlimited, INC. ANY REPRODUCTION IN PART OR AS A WHOLE WITHOUT THE WRITTEN PERMISSION OF DDB Unlimited, INC. IS PROHIBITED.

File Location: (DDB)(EPDM Vault)
C:\DDB\Drawing Requests\Customers\DDB WEB DWG\OD Family WEB\DR-00433 (OD-78DD)\

ISO 9001 & 27001
Certified company

OD Series

OD-78DDXC

Made in America

Believing in American Craftsmanship

Why Choose the OD Series?

The OD series of enclosures are the ultimate choice for your outdoor racking requirements. Being made of our own rugged Alumiflex®, you'll find it noticeably lighter than steel, yet strong enough to rack even the heaviest equipment. When choosing the OD series, you have handpicked the highest value in American construction. The OD-78DDXC includes the standard features you have come to expect with DDB, incorporating the versatile rail strut (R-Strut) system for adjustable racking, the security of a 3- point locking system and our patented Alumishield® solar cap to manage heat loads. For those who need more than just our standard enclosure, DDB can also make a truly customized solution with our many available options including HVAC, providing a climate-controlled environment for any electronic equipment, electrical load panels and cable entry solutions to name a few. All of this comes together to create an enclosure able to meet all of the unique needs your customers have been seeking. DDB offers a state-of-the-art design, a competitive price, benchmark lead times and a guaranteed delivery, all backed up with an industry leading 15-year warranty on every enclosure. Put DDB's substantial stock to work for you today. Contact our professional staff to assist you with your made-to-order solution.



Features

0.125" Aluminum Construction

Stainless Steel External Hardware/Hinge

3 Point Lock System

Heavy Duty Out-Door Construction

Front and Rear Access

Custom Colors Available

Cream Powder-Coat in Stock

Flexible and Scalable

15 Year Warranty

Quick Shipping

Application Types

Telecommunications
Wireless/Broadband
Fiber Optics
Back Haul
Small Cell/DAS
Public Safety
Utility
Base Station
Military
Trailer-Based Communications
Wi-Fi
LTEE/4G/5G



Environmental & Safety Ratings:

- ✓ NEMA 3R, IP 24 (shown above)
- ✓ NEMA 4 and 4X, IP 66 configurable (not shown)
- ✓ OD-78 Series, ETL environmentally listed to UL 50/50E, Type 4's
  Available here: https://www.ddbunlimited.com/new-ul-50e-listed/
- ✓ ETL listed; Safety Requirements, UL 62368-1:2019 Ed.3, CSA C22.2

Weight and Dimensions

Approximate Exterior Enclosure Dimensions:

79"H x 28"W x 47"D

Shipping Dimensions:

32"W x 52"L- Palletized

Approximate Shipping Weight:

268 lbs.

2301 S. HWY 77 Pauls Valley, OK 73075
T: (800) 753-8459 – F: (877) 220-7236
sales@ddbunlimited.com www.ddbunlimited.com

ISO 9001 & 27001
Certified company

OD Series

OD-78DDXC

Made in America

Believing in American Craftsmanship

15 YEAR WARRANTY



Features

1. Alumishield
2. Front and Rear 19” Adjustable Racking Rails, 84 RU’s
3. Rear Access Door
4. Stainless Steel Door Hinge
5. 3 Point Locking System
6. Powder-Coat Cream
7. Reusable Vent Filters

ETL LISTED C US Intertek

Installation, operating and safety instructions can be downloaded here

Scan this code for replacement parts

2301 S. HWY 77 Pauls Valley, OK 73075
T: (800) 753-8459 – F: (877) 220-7236
sales@ddbunlimited.com www.ddbunlimited.com

Rev C

WEB DRAWING (NOT FOR FABRICATION)

REVISIONS		
REV.	DESCRIPTION	DATE
A	Web Drawing per DR-00425	11/15/2011
B	Add new components and DWG template to WEB DWG per DR-00928	5/12/2014
C	UPDATED TO 2019 FORMAT	3/5/2019
D	UPDATED DRAWING WITH DOOR RODS WITH ROLLERS PER DR-02264	4/17/2020

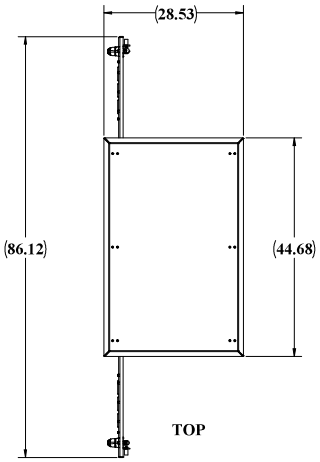

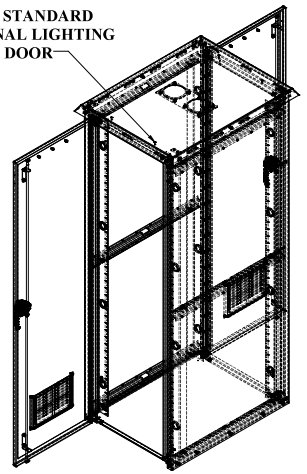

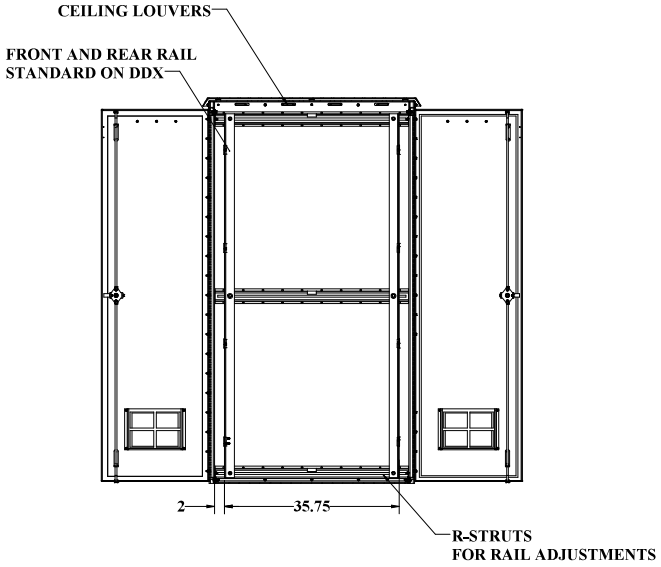

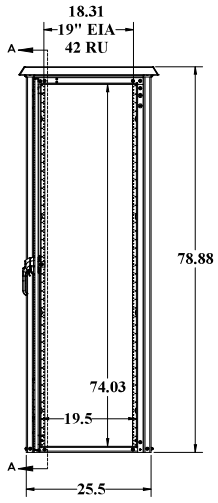

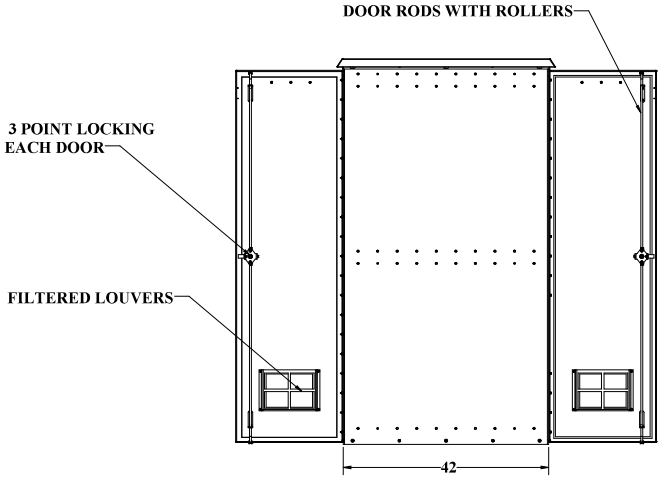

WEB DRAWING (NOT FOR FABRICATION)

UNLESS OTHERWISE SPECIFIED:		NAME	DATE	*DDB Unlimited Inc.*			
DIMENSIONS ARE IN INCHES	Model by:	DDB	5/12/2014	OD Family Enclosures			
ANGULAR: MACH ± BEND ± TWO PLACE DECIMAL ± THREE PLACE DECIMAL ±	Drawn by:	Marvin5	03/05/19	Enclosure, OD, 78, DDX			
ALL EDGES BREAK ALL MATERIAL FINISHES 0.127	Sales Rep.	Bryan C	11/16/11	SIZE	Cage Code:	DWG. NO.:	REV
	Q.A. Appr.	Marty	04/20/20	D	3S5Y5	00434	D
MATERIAL: 5052-H32/0.125-1ASTM-B209-14	Prod.Mgr.	ClarkK	04/21/20				
PAINT: BASECOAT/CLEARCOAT SYSTEM PER SPEC	DO NOT SCALE DRAWING	Control Number:		SCALE: 1:32	WEIGHT: 230 lbs.	SHEET 1 OF 3	

UNCLASSIFIED PUBLIC

WEB DRAWING (NOT FOR FABRICATION)

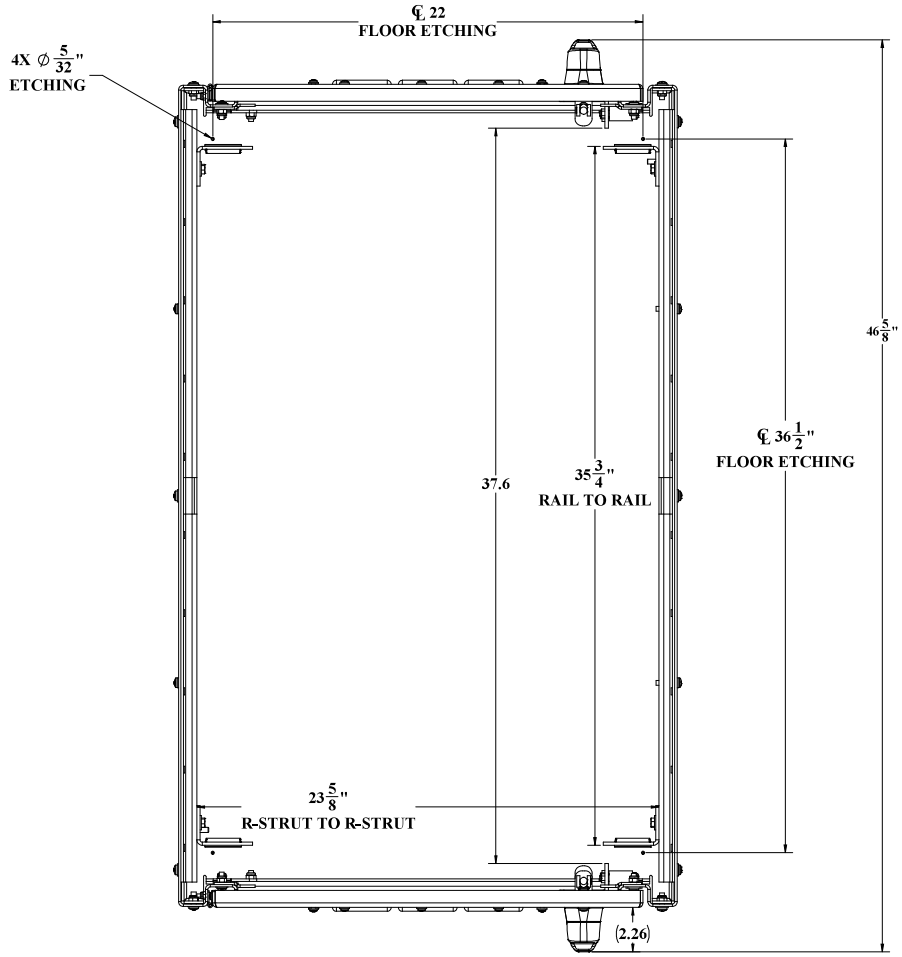

TOP VIEW CEILING AND ALUMASHIELD NOT SHOWN

WEB DRAWING (NOT FOR FABRICATION)

UNLESS OTHERWISE SPECIFIED:	DDB Unlimited Inc.		
DIMENSIONS ARE IN INCHES ANGULAR: ±1° FRACTIONAL/NO DECIMAL: ±0.1250 TWO PLACE DECIMAL: ±0.0500 THREE PLACE DECIMAL: ±0.0100 ALL HOLES ±0.0076Ø	DDX Closed OD Family Enclosure, DDX, Closed		
	SIZE: D	Cage Code: 385Y5	DWG. NO.: 00434 REV: D
MATERIAL: 5052-H32/6XX.X-T5-ASTM-B209-04	SCALE: 1:32	WEIGHT:	SHEET 2 OF 3
PAINT: DIAMOND VOGEL HEAVE GLOSS TEXTURE 854870			
DO NOT SCALE DRAWING			

DDB FORM 7.1-REV.K 08/02/17

UNCLASSIFIED PUBLIC
THE INFORMATION CONTAINED IN THIS DRAWING IS THE SOLE PROPERTY OF DDB Unlimited, INC. ANY
REPRODUCTION IN PART OR AS A WHOLE WITHOUT THE WRITTEN PERMISSION OF DDB Unlimited, INC. IS PROHIBITED.

File Location: (DDB) [EPDM Vault]
C:\DDB\Drawing Requests\Customers\DDB WEB DWG\OD Family WEB\DR-00434 (OD-78DDX)\

WEB DRAWING (NOT FOR FABRICATION)

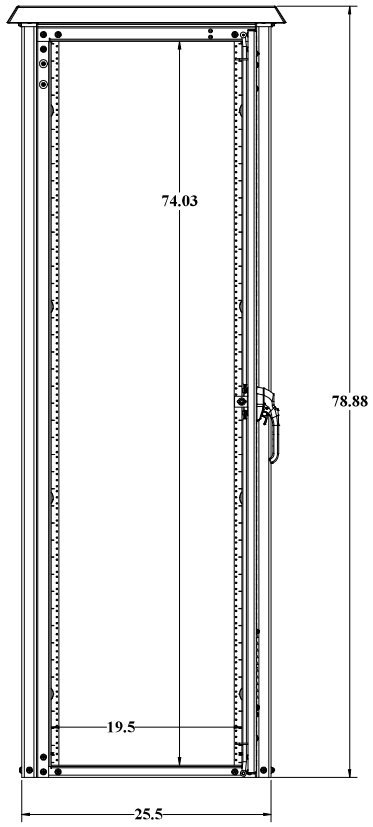

BACK VIEW GASKET NOT SHOWN

WEB DRAWING (NOT FOR FABRICATION)

UNLESS OTHERWISE SPECIFIED:	*DDB Unlimited Inc.*		
DIMENSIONS ARE IN INCHES ANGULAR: ±1° FRACTIONAL: ±0.125 TWO PLACE DECIMAL: ±.01 THREE PLACE DECIMAL: ±.005 ALL HOLES ±0.005	OD-78DDX Enclosure, OD, 78, DDX		
	SIZE: D	Cage Code: 3S5Y5	DWG. NO.: 00434 REV: D
MATERIAL: 5052-H32 ALUM. PER ASTM-B209-04	SCALE: 1:32	WEIGHT:	SHEET 3 OF 3
PAINT: SHADOW VOGEL BEIGE GLOSS TEXTURE #24039			
DO NOT SCALE DRAWING			

DDB FORM 7.1-REV.K 08/02/17

UNCLASSIFIED PUBLIC
THE INFORMATION CONTAINED IN THIS DRAWING IS THE SOLE PROPERTY OF DDB Unlimited, INC. ANY
REPRODUCTION IN PART OR AS A WHOLE WITHOUT THE WRITTEN PERMISSION OF DDB Unlimited, INC. IS PROHIBITED.

File Location: (DDB) (EPDM Vault)
C:\DDB\Drawing Requests\Customers\DDB WEB DWG\OD Family WEB\DR-00434 (OD-78DDX)\

An ISO 9001 Certified company

WOD Series

WOD-16DXC

Made in America

Believing in American Craftsmanship

15 YEAR WARRANTY

Why Choose the WOD Series?

The WOD series of enclosures are the ultimate choice for your outdoor racking requirements. Being made of our own rugged Alumiflex®, you'll find it noticeably lighter than steel, yet strong enough to rack even the heaviest equipment. When choosing the WOD series, you have handpicked the highest value in American construction. The WOD-16DXC includes the standard features you have come to expect with DDB, incorporating the versatile strut system for adjustable racking, the security of a 3-point locking system and our patented Alumishield® solar cap to manage heat loads. For those who need more than just our standard enclosure, DDB can also make a truly customized solution with our many available options including HVAC, providing a climate-controlled environment for any electronic equipment, electrical load panels and cable entry solutions to name a few. All of this comes together to create an enclosure able to meet all of the unique needs your customers have been seeking. DDB offers a state-of-the-art design, a competitive price, benchmark lead times and a guaranteed delivery, all backed up with an industry leading 15-year warranty on every enclosure. Put DDB's substantial stock to work for you today. Contact our professional staff to assist you with your made-to-order solution.



Application Types

Telecommunications
Wireless/Broadband
Fiber Optics
Back Haul
Small Cell/DAS
Public Safety
Utility
Base Station
Military
Trailer-Based Communications
Wi-Fi
LTEE/4G/5G



Industry Standards:

NEMA 3R as shown
NEMA 4 and 4X configurable (unlisted to environmental rating)
WOD Series Listed to UL 50/50E Type 4 Available
ETL listed to UL Standard 60950-1/CSA 22.2C

2301 S. HWY 77 Pauls Valley, OK 73075
T: (800) 753-8459 – F: (877) 220-7236
sales@ddbunlimited.com www.ddbunlimited.com

Features

0.125" Aluminum Construction
Stainless Steel External Hardware/Hinge
3 Point Lock System
Heavy Duty Out-Door Construction
Front and Rear Access
Custom Colors Available
Cream & Red Powder-Coat in Stock
Flexible and Scalable
15 Year Warranty
Quick Shipping

Weight and Dimensions

Approximate Exterior Enclosure Dimensions:
18"H x 32"W x 30"D
Shipping Dimensions:
42"D x 32"W -Palletized
Approximate Shipping Weight:
130 lbs.

An ISO 9001 Certified company

WOD Series

WOD-16DXC

Made in America

Believing in American Craftsmanship



Features

1. Solar Shield (Alumishield)
2. 19” and 23” Reversable Racking Rails
3. Rear Access Door
4. Stainless Steel Door Hinge
5. 3 Point Locking System
6. Powder-Coat Cream
7. Reusable Vent Filters
8. Automatic Wind-Lock

2301 S. HWY 77 Pauls Valley, OK 73075
T: (800) 753-8459 – F: (877) 220-7236
sales@ddbunlimited.com www.ddbunlimited.com

WEB DRAWING (NOT FOR FABRICATION)

REVISIONS		
REV.	DESCRIPTION	DATE
A	Initial Web Drawing per DR-00134	6/10/2013
B	revise to incorporate new components and new drawing template pdr DR-00904	5/12/2014
C	UPDATED FORMAT PER DR-01937	3/12/2019
D	UPDATED DRAWING WITH DOOR RODS WITH ROLLERS PER DR-02265	4/21/2020

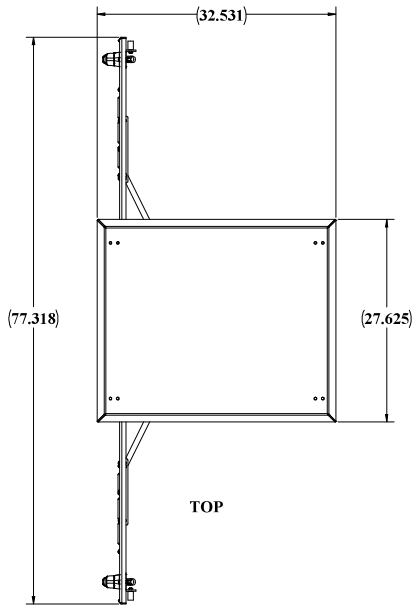

TOP

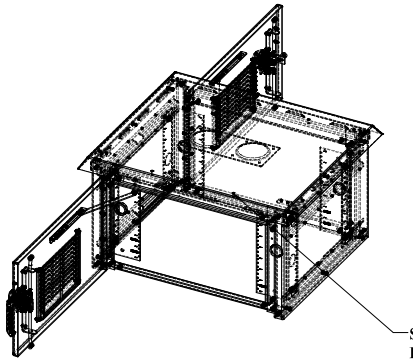

STANDOFFS STANDARD
FOR OPTIONAL LIGHTING
OVER EACH DOOR
FRONT AND REAR

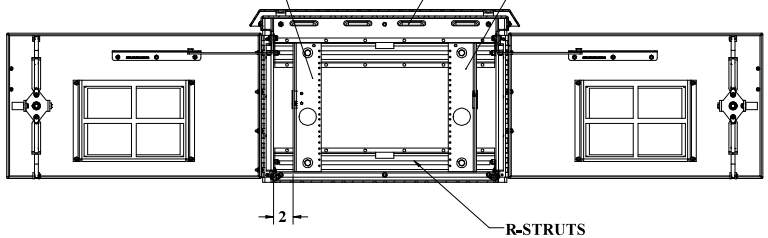

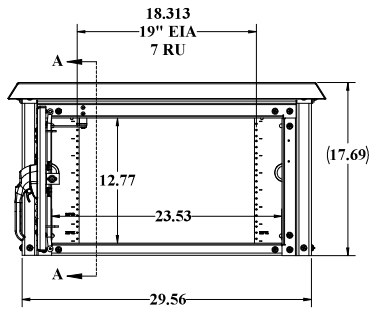

FRONT

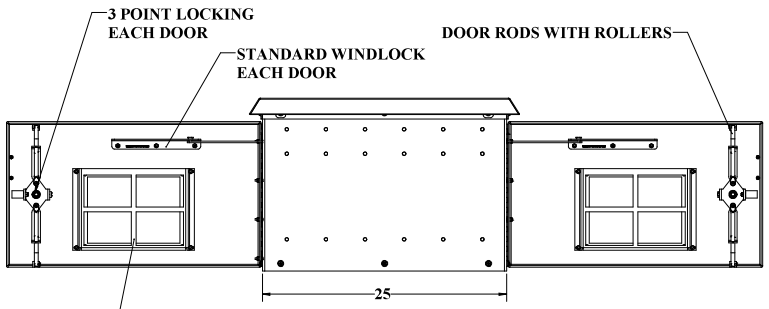

RIGHT SIDE

FILTERED LOUVERS

WEB DRAWING (NOT FOR FABRICATION)

UNLESS OTHERWISE SPECIFIED:		NAME	DATE	DDB Unlimited Inc.			
DIMENSIONS ARE IN INCHES	Modeled by:	DDB	05/12/14	WOD-XXXX			
ANGULAR: MACH ± BEND ± TWO PLACE DECIMAL ± THREE PLACE DECIMAL ±	Drawn by:	aerose	04/21/20	WOD, 16"H, DX			
ALL HOLES ø UNLESS NOTED. MATERIAL THICKNESS IS 0.125"	Sales Rel	Con Campbell	06/25/13	SIZE	Cage Code:	DWG. NO.:	REV
	Q.A. Appr.	troy	04/27/20	D	3S5Y5	00134	D
MATERIAL: 5052-H32/0.125" ASTM-B209M	Prod.Mgr.	ClarkK	04/28/20	SCALE: 1:8	WEIGHT: 83 lbs.	SHEET 1 OF 3	
PAINT: Textured Sand Ship Gloss Texture Cat#:	Control Number:						
DO NOT SCALE DRAWING							

DDB FORM: 7.1-2 REV:F 05/02/19

UNCLASSIFIED PUBLIC

File Location: [DDB]/EPDM Vault/
C:\DDB\Drawing Requests\Customers\DDB WEB DWG\WOD Family WEB\DR-00134 (WOD-16 WEB)\

WEB DRAWING (NOT FOR FABRICATION)

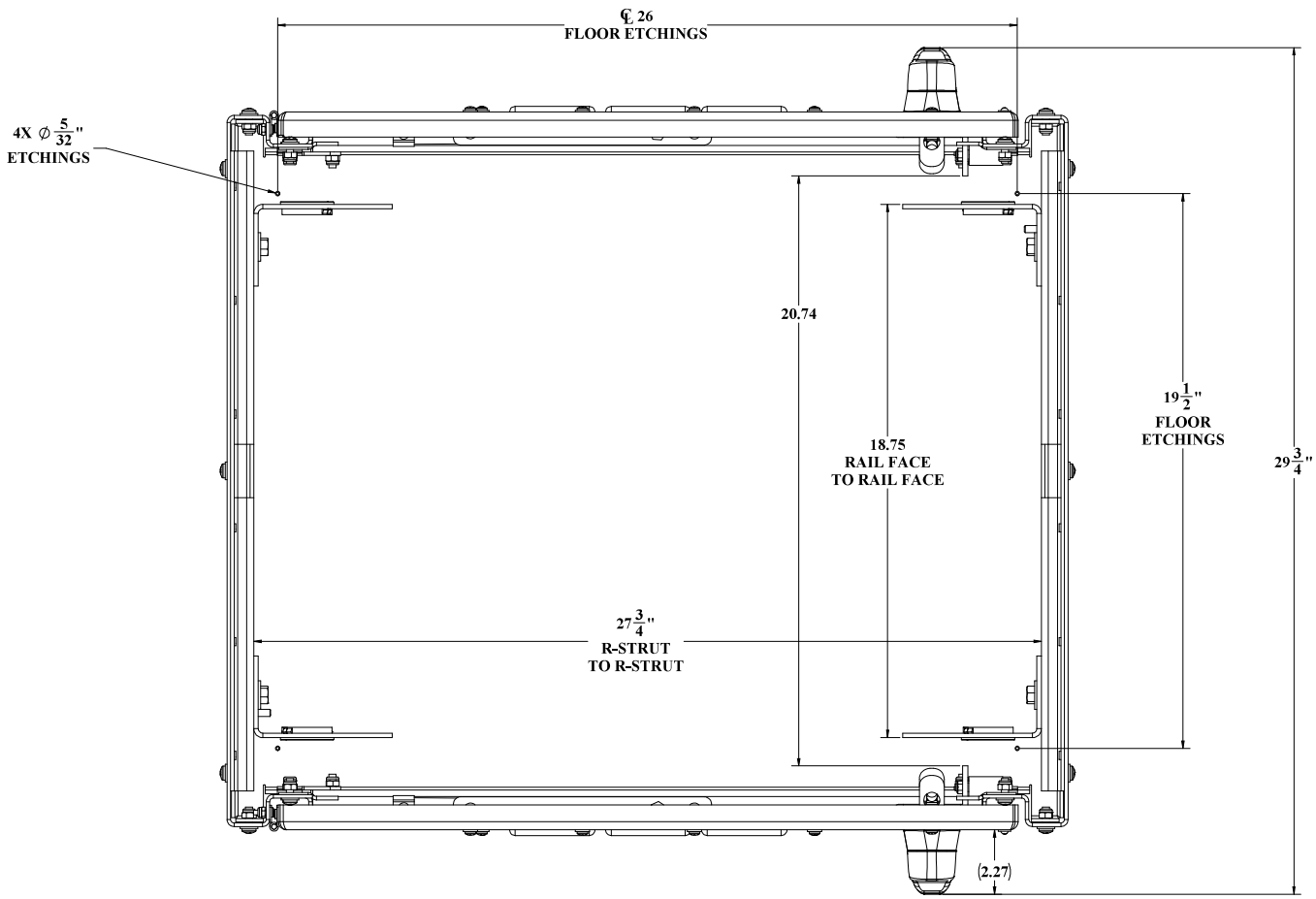

TOP VIEW
CEILING AND ALUMASHIELD NOT SHOWN

WEB DRAWING (NOT FOR FABRICATION)

UNLESS OTHERWISE SPECIFIED:	DDB Unlimited Inc.			
DIMENSIONS ARE IN INCHES ANGULAR: ±1° FRACTIONAL/NO DECIMAL: ±0.125 TWO PLACE DECIMAL: ±.01[0.25] THREE PLACE DECIMAL: ±.005[0.13] ALL HOLES: ±0.005[0.13]	DX Closed Enclosure, Family, WOD DX Closed			
	SIZE	Cage Code:	DWG. NO.:	REV
MATERIAL: 5052-H32X.125" ASTM-B209M4	D	3B5Y5	00134	D
PAINT: Diamond Vogel, Beige Gloss Texture F3-5320	SCALE: 1:8	WEIGHT:		SHEET 2 OF 3
DO NOT SCALE DRAWING				

DDB FORM 7.1-REV.K 08/02/17

UNCLASSIFIED PUBLIC
THE INFORMATION CONTAINED IN THIS DRAWING IS THE SOLE PROPERTY OF DDB Unlimited, INC. ANY
REPRODUCTION IN PART OR AS A WHOLE WITHOUT THE WRITTEN PERMISSION OF DDB Unlimited, INC. IS PROHIBITED.

File Location: (DDB) (EPDM Vault)
C:\DDB\Drawing Requests\Customers\DDB WEB DWG\WOD Family WEB\DR-00134 (WOD-16DX

WEB DRAWING (NOT FOR FABRICATION)

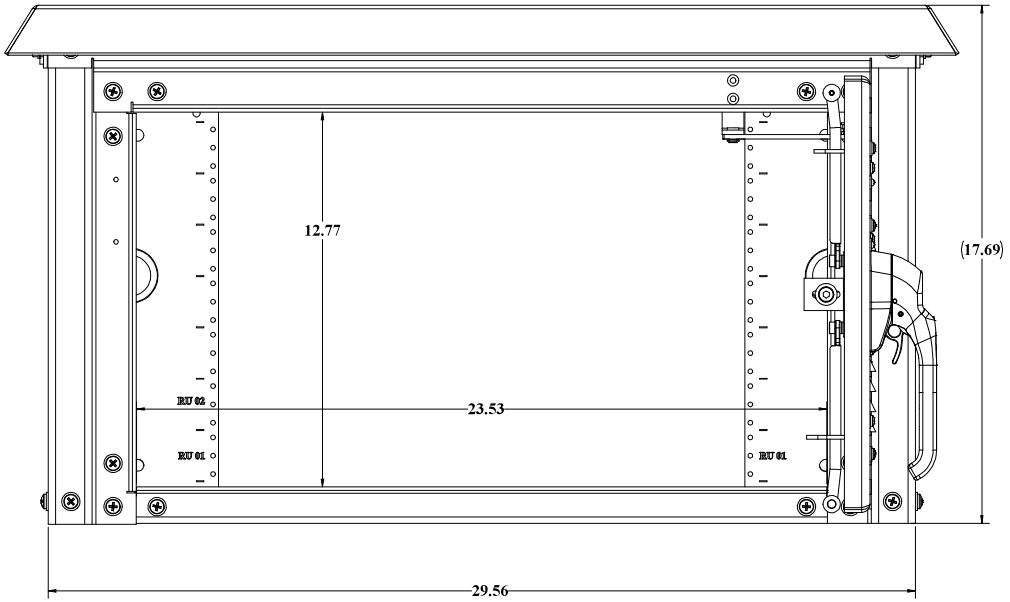

BACK VIEW
GASKET NOT SHOWN

WEB DRAWING (NOT FOR FABRICATION)

UNLESS OTHERWISE SPECIFIED: DIMENSIONS ARE IN INCHES. ANGULAR: ±1° FRACTIONAL/NO DECIMAL: ±0.125 TWO PLACE DECIMAL: ±0.030 TWO PLACE DECIMAL: ±0.010 THREE PLACE DECIMAL: ±0.005 ALL HOLES ±0.005		*DDB Unlimited Inc.* WOD-16DX **WOD, 16"H, DX**		
	SIZE	Cage Code:	DWG. NO.:	REV
MATERIAL: 304SS18X18" 22" ASTM-B29904	D	3B5Y5	00134	D
PAINT: Diamond Vogel, Beige Gloss Texture F3-5320	SCALE: 1:8	WEIGHT:		SHEET 3 OF 3
DO NOT SCALE DRAWING				

DDB FORM 7.1-REV.K 08/02/17

UNCLASSIFIED PUBLIC
THE INFORMATION CONTAINED IN THIS DRAWING IS THE SOLE PROPERTY OF DDB Unlimited, INC. ANY REPRODUCTION IN PART OR AS A WHOLE WITHOUT THE WRITTEN PERMISSION OF DDB Unlimited, INC. IS PROHIBITED.

File Location: (DDB) EPDM Vault:
C:\DDB\Drawing Requests\Customers\DDB WEB DWG\WOD Family WEB\DR-00134 (WOD-16DX

An ISO 9001 Certified company

WOD Series

WOD-16DDC

Made in America

Believing in American Craftsmanship

15 YEAR WARRANTY

Why Choose the WOD Series?



The WOD series of enclosures are the ultimate choice for your outdoor racking requirements. Being made of our own rugged Alumiflex®, you'll find it noticeably lighter than steel, yet strong enough to rack even the heaviest equipment. When choosing the WOD series, you have handpicked the highest value in American construction. The WOD-16DDC includes the standard features you have come to expect with DDB, incorporating the versatile strut system for adjustable racking, the security of a 3-point locking system and our patented Alumishield® solar cap to manage heat loads. For those who need more than just our standard enclosure, DDB can also make a truly customized solution with our many available options including HVAC, providing a climate-controlled environment for any electronic equipment, electrical load panels and cable entry solutions to name a few. All of this comes together to create an enclosure able to meet all of the unique needs your customers have been seeking. DDB offers a state-of-the-art design, a competitive price, benchmark lead times and a guaranteed delivery, all backed up with an industry leading 15-year warranty on every enclosure. Put DDB's substantial stock to work for you today. Contact our professional staff to assist you with your made-to-order solution.

Application Types

Telecommunications
Wireless/Broadband
Fiber Optics
Back Haul
Base Station
Small Cell/DAS
Utility
Military
Trailer-Based Communications
Wi-Fi
Flexible and Scalable



Environmental & Safety Ratings:

✓ NEMA 3R, 4 or 4X
✓ ETL Certified to UL standard 60950-1/CSA 22.2C

Features

15 Year Warranty
0.125" Aluminum Construction
3 Point Lock System
Heavy Duty Out-Door Construction
Front and Rear Access
Standard Lifting Hooks
Stainless Steel External Hardware/Hinge
Cream Powder-Coat, Standard
Quick Shipping

Weight and Dimensions

Approximate Exterior Enclosure Dimensions:
18”H x 33”W x 39D
Shipping Dimensions:
26”H x 42”W x 42”D- Palletized
Approximate Shipping Weight:
133 lbs.

2301 S. HWY 77 Pauls Valley, OK 73075
T: (405)-665-2876
sales@ddbunlimited.com www.ddbunlimited.com

DDB UNLIMITED®

An ISO 9001 Certified company

WOD Series

WOD-16DDC

Made in America

Believing in American Craftsmanship

15 YEAR WARRANTY



Features

1. Alumishield
2. Wind Locks
3. 19” and 23” Adjustable Racking Rails
4. Stainless Steel Door Hinge
5. Reusable Vent Filters
6. 3 Point Locking System
7. Heavy Duty 0.160" Doors
8. Powder-Coat Cream
9. Rear Door Access

2301 S. HWY 77 Pauls Valley, OK 73075
T: (405)-665-2876
sales@ddbunlimited.com www.ddbunlimited.com

Scan this code for Climate Control

Scan this code for Accessories

REVISIONS		
REV.	DESCRIPTION	DATE
A	Initial Web Drawing per DR-00134	6/10/2013
B	Revise to incorporate new components and new drawing template pdr DR-00905	5/13/2014
C	UPDATED DRAWING PER DR-01938	4/10/2019
D	UPDATED DRAWING WITH DOOR RODS WITH ROLLERS PER DR-02266	4/21/2020

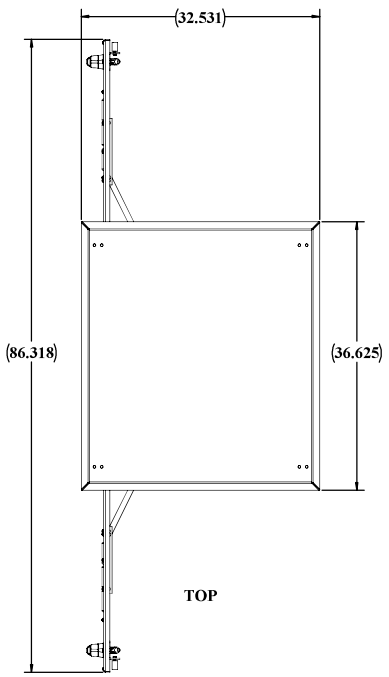

TOP

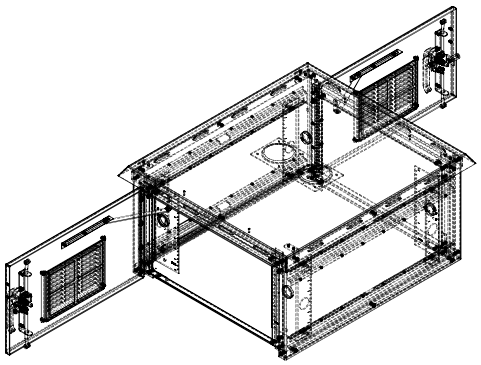

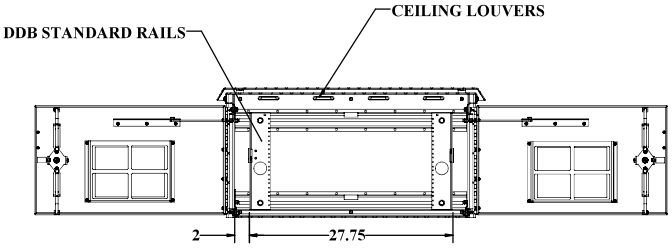

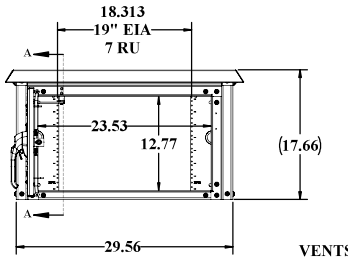

FRONT

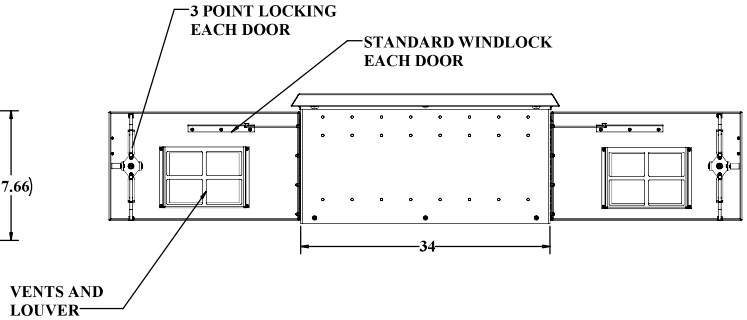

RIGHT SIDE

UNLESS OTHERWISE SPECIFIED:	DDB Unlimited Inc.			
DIMENSIONS ARE IN INCHES ANGULAR: ±1° FRACTIONAL: ±1/64 TWO PLACE DECIMAL: ±.010 THREE PLACE DECIMAL: ±.005 ALL HOLES ±.003	WOD-16DD WOD, 16"H, DDWOD-16DD			
	SIZE	Cage Code:	DWG. NO.:	REV
	D	3B5Y5	00264	D
MATERIAL: 5052-H32-0.125 ASTM B209-04	SCALE: 1:8	WEIGHT: 99 lbs.	SHEET 1 OF 3	
PAINT: DIAMOND VOGEL, RITE GLOSS TEXTURE 874920				
DO NOT SCALE DRAWING				

DDB FORM 7.1-REV.K 08/03/17

UNCLASSIFIED PUBLIC

File Location: (DDB)(EPDM Vault)
C:\DDB\DR Requests\Customers\DDB WEB DWG\WOD Family WEB\DR-00264 (WOD-16DD

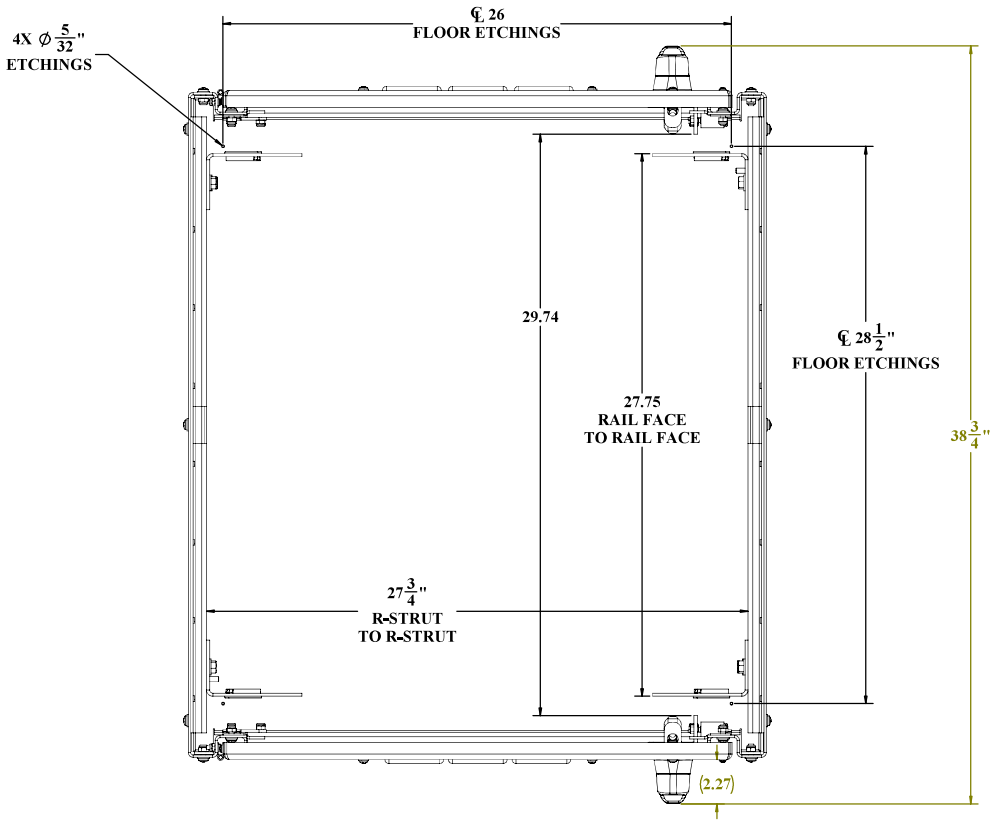

TOP VIEW
CEILING AND ALUMASHIELD NOT SHOWN

UNLESS OTHERWISE SPECIFIED:	DDB Unlimited Inc.			
DIMENSIONS ARE IN INCHES ANGULAR: ±1° FRACTIONAL: NO DECIMAL: ±1/16 TWO PLACE DECIMAL: ±.010 TWO PLACE DECIMAL: ±.005 THREE PLACE DECIMAL: ±.010 ALL HOLES ⌀.005Ⓜ	DD Closed Enclosure, Family, WODDD Closed			
	SIZE	Cage Code:	DWG. NO.:	REV
	D	3S5Y5	00264	D
MATERIAL: 5052-H32-0.125 ASTM B209-04	SCALE: 1:8	WEIGHT: 131 lbs.		SHEET 2 OF 3
PAINT: DIAMOND VOGEL, RITE GLOSS TEXTURE 874920				
DO NOT SCALE DRAWING				

DDB FORM 7.1-REV.K 08/03/17

UNCLASSIFIED PUBLIC

WEB DRAWING (NOT FOR FABRICATION)

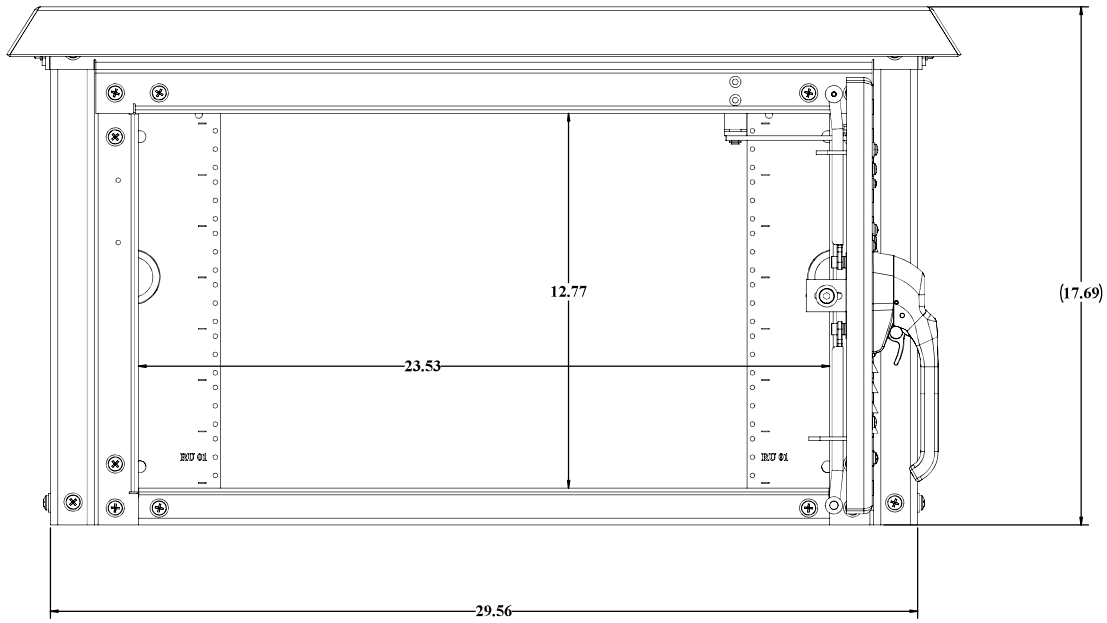

BACK VIEW
GASKET NOT SHOWN

WEB DRAWING (NOT FOR FABRICATION)

UNLESS OTHERWISE SPECIFIED:	*DDB Unlimited Inc.*			
DIMENSIONS ARE IN INCHES ANGULAR: FRACTIONAL: NO DECIMAL: TWO PLACE DECIMAL: THREE PLACE DECIMAL: ALL HOLES ⌀	WOD-16DD WOD, 16"H, DDWOD-16DD			
	SIZE	Cage Code:	DWG. NO.:	REV
MATERIAL: 5052-H32-0.125 ASTM B209-04	D	3S5Y5	00264	D
PAINT: DIAMOND VOGEL, BEIGE GLOSS TEXTURE 874920	SCALE: 1:8	WEIGHT: 99 lbs.		SHEET 3 OF 3
DO NOT SCALE DRAWING				

DDB FORM 7.1-REV.K 08/02/17

UNCLASSIFIED PUBLIC

File Location: (DDB)(EPDM Vault)
C:\DDB\DR Requests\Customers\DDB WEB DWG\WOD Family WEB\DR-00264 (WOD-16DD

An ISO 9001 Certified company

WOD Series

WOD-30DXC

Made in America

Believing in American Craftsmanship

15 YEAR WARRANTY

Why Choose the WOD Series?

The WOD series of enclosures are the ultimate choice for your outdoor racking requirements. Being made of our own rugged Alumiflex®, you'll find it noticeably lighter than steel, yet strong enough to rack even the heaviest equipment. When choosing the WOD series, you have handpicked the highest value in American construction. The WOD-30DXC includes the standard features you have come to expect with DDB, incorporating the versatile strut system for adjustable racking, the security of a 3-point locking system and our patented Alumishield® solar cap to manage heat loads. For those who need more than just our standard enclosure, DDB can also make a truly customized solution with our many available options including HVAC, providing a climate-controlled environment for any electronic equipment, electrical load panels and cable entry solutions to name a few. All of this comes together to create an enclosure able to meet all of the unique needs your customers have been seeking. DDB offers a state-of-the-art design, a competitive price, benchmark lead times and a guaranteed delivery, all backed up with an industry leading 15-year warranty on every enclosure. Put DDB's substantial stock to work for you today. Contact our professional staff to assist you with your made-to-order solution.



Features

0.125" Aluminum Construction

Stainless Steel External Hardware/Hinge

3 Point Lock System

Heavy Duty Out-Door Construction

Front and Rear Access

Custom Colors Available

Cream & Red Powder-Coat in Stock

Flexible and Scalable

15 Year Warranty

Quick Shipping

Application Types

Telecommunications
Wireless/Broadband
Fiber Optics
Back Haul
Small Cell/DAS
Public Safety
Utility
Base Station
Military
Trailer-Based Communications
Wi-Fi
LTEE/4G/5G



Industry Standards:

NEMA 3R as shown

NEMA 4 and 4X configurable (unlisted to environmental rating)

WOD Series Listed to UL 50/50E Type 4 Available

ETL listed to UL Standard 60950-1/CSA 22.2C

Weight and Dimensions

Approximate Exterior Enclosure Dimensions:

32"H x 32"W x 30"D

Shipping Dimensions:

32“W x 42“L - Palletized

Approximate Shipping Weight:

144 lbs.

2301 S. HWY 77 Pauls Valley, OK 73075
T: (800) 753-8459 – F: (877) 220-7236
sales@ddbunlimited.com www.ddbunlimited.com

DDB UNLIMITED®

An ISO 9001 Certified company

WOD Series

WOD-30DXC

Made in America

Believing in American Craftsmanship

15 YEAR WARRANTY



Features

1. Solar Shield (Alumishield)
2. 19” and 23” Reversable Racking Rails
3. Rear Access Door
4. Stainless Steel Door Hinge
5. 3 Point Locking System
6. Powder-Coat Cream
7. Reusable Vent Filters

2301 S. HWY 77 Pauls Valley, OK 73075
T: (800) 753-8459 – F: (877) 220-7236
sales@ddbunlimited.com www.ddbunlimited.com

WEB DRAWING (NOT FOR FABRICATION)

REVISIONS		
REV.	DESCRIPTION	DATE
A	Initial Web Drawing per DR-00134	6/10/2013
B	revise to incorporate new components and new drawing template pdr DR-00907	5/13/2014
C	UPDATED DRAWING TO NEW FORMAT PER DR-01939	4/10/2019
D	UPDATED DRAWING WITH DOOR RODS WITH ROLLERS PER DR-02268	4/24/2020

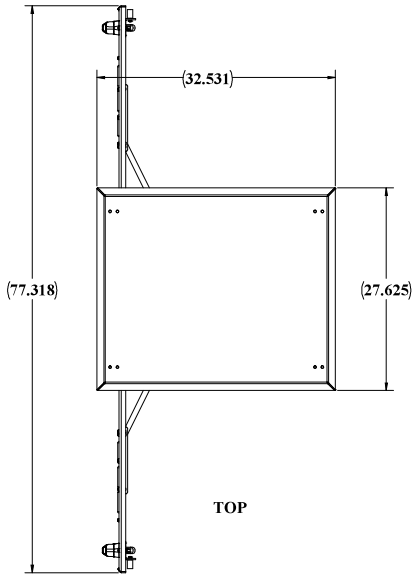

TOP

STANDOFFS ARE STANDARD FOR OPTIONAL LIGHTING OVER EACH DOOR FRONT AND REAR

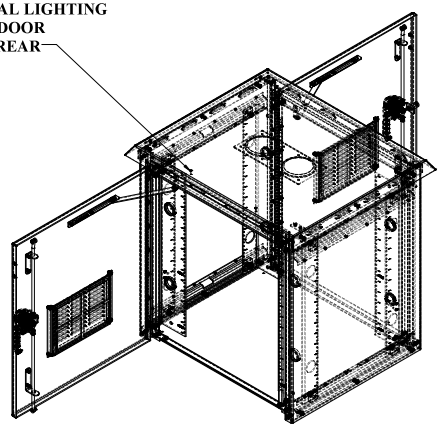

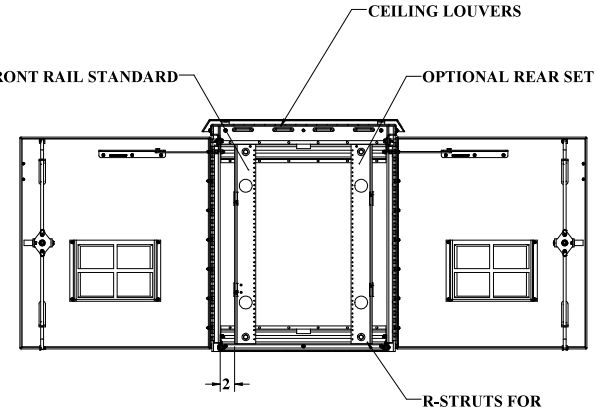

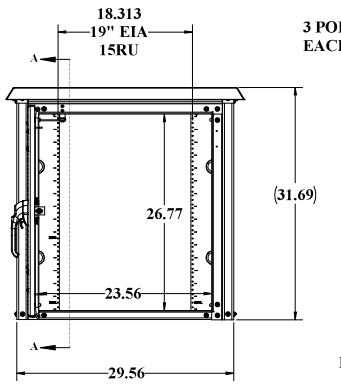

FRONT

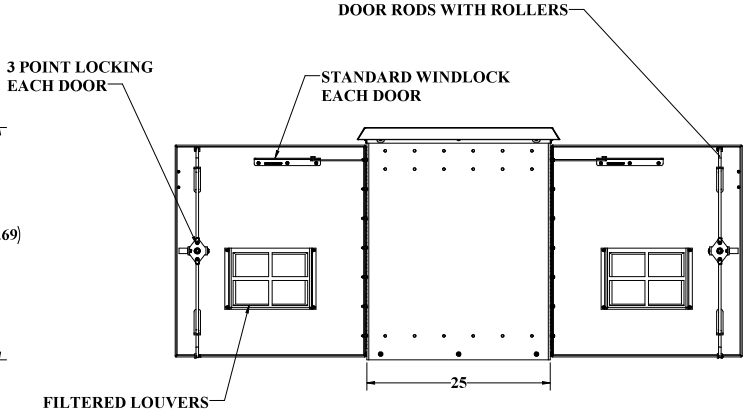

RIGHTSIDE

WEB DRAWING (NOT FOR FABRICATION)

UNLESS OTHERWISE SPECIFIED:		NAME	DATE	DDB Unlimited Inc.			
DIMENSIONS ARE IN INCHES	Modeled by:	DDB	5/13/2014	WOD-XXXX			
ANGULAR: MACH ± BEND ± TWO PLACE DECIMAL ± THREE PLACE DECIMAL ±	Drawn by:	aerose	04/24/20	WOD, 30"H, DX			
ALL HOLES ø MATERIAL THICKNESS	Sales Rel	on Campbell	05/25/2013	SIZE	Cage Code:	DWG. NO.:	REV
	Q.A. Appr.	troy	04/27/20	D	3S5Y5	00267	D
MATERIAL: 5052-H32/0.125" ASTM-B209M	Prod.Mgr.	ClarkK	04/28/20				
PAINT: Textured Sand Beige Gloss Texture Ch#570	Control Number:			SCALE: 1:12	WEIGHT: 114 lbs.		SHEET 1 OF 3
DO NOT SCALE DRAWING							

DDB FORM: 7.1-2 REV:F 05/02/19

UNCLASSIFIED PUBLIC

File Location: (DDB)[PDM Vault]
C:\DDB\Drawing Requests\Customers\DDB WEB DWG\WOD Family WEB\DR-00267 (WOD-30 WEB)\

WEB DRAWING (NOT FOR FABRICATION)

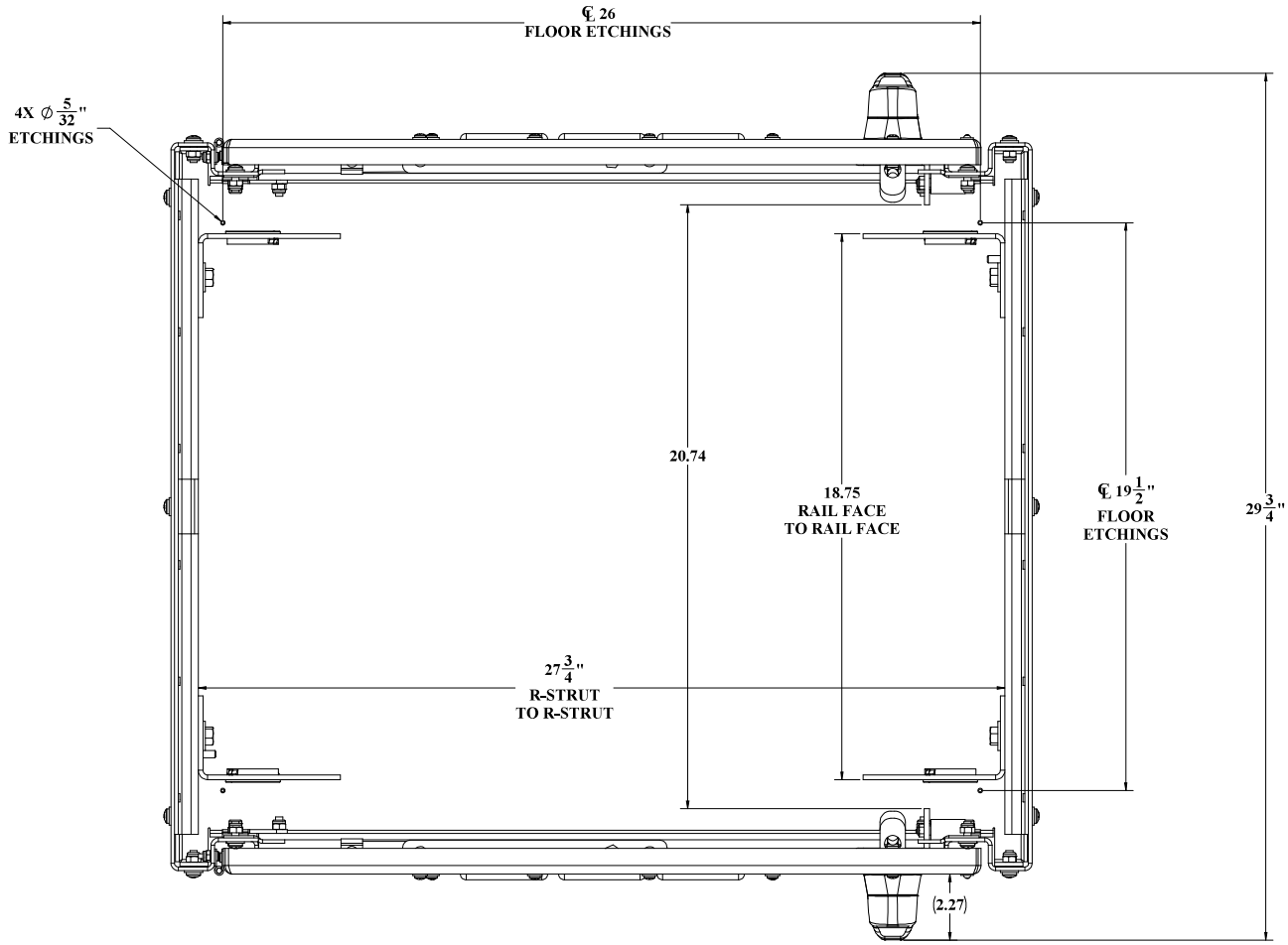

TOP VIEW
CEILING AND ALUMASHIELD NOT SHOWN

WEB DRAWING (NOT FOR FABRICATION)

UNLESS OTHERWISE SPECIFIED:	DDB Unlimited Inc.			
DIMENSIONS ARE IN INCHES ANGULAR: ±1° FRACTIONAL/NO DECIMAL: ±0.125 TWO PLACE DECIMAL: ±.01 THREE PLACE DECIMAL: ±.005 ALL HOLES ±0.005	DX Closed Enclosure, Family, WOD DX Closed			
	SIZE	Cage Code:	DWG. NO.:	REV
	D	3B5Y5	00267	D
MATERIAL: 5052-H32X.125" ASTM-B209M4	SCALE: 1:12	WEIGHT:		SHEET 2 OF 3
PAINT: Diamond Vogel Beige Gloss Texture ET-0320				
DO NOT SCALE DRAWING				

DDB FORM 7.1-REV.K 08/02/17

UNCLASSIFIED PUBLIC
THE INFORMATION CONTAINED IN THIS DRAWING IS THE SOLE PROPERTY OF DDB Unlimited, INC. ANY
REPRODUCTION IN PART OR AS A WHOLE WITHOUT THE WRITTEN PERMISSION OF DDB Unlimited, INC. IS PROHIBITED.

File Location: (DDB) (EPDM Vault)
C:\DDB\Drawing Requests\Customers\DDB WEB DWG\WOD Family WEB\DR-00267 (WOD-30DX

WEB DRAWING (NOT FOR FABRICATION)

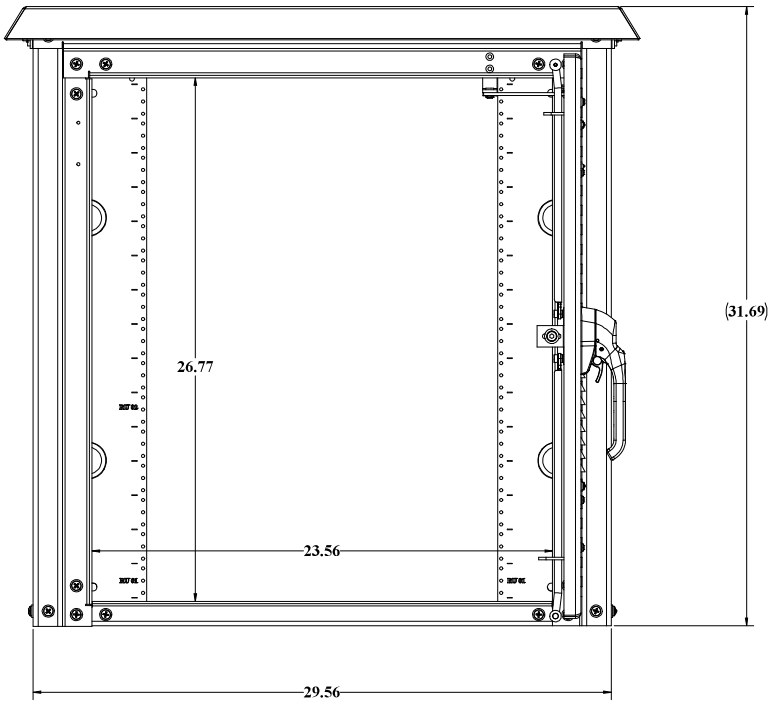

BACK VIEW
GASKET NOT SHOWN

WEB DRAWING (NOT FOR FABRICATION)

UNLESS OTHERWISE SPECIFIED:	DDB Unlimited Inc.			
DIMENSIONS ARE IN INCHES ANGULAR: ±1° FRACTIONAL/NO DECIMAL: ±0.125 TWO PLACE DECIMAL: ±.01[0.25] THREE PLACE DECIMAL: ±.010[0.25] ALL EDGES ##10[##]	WOD-30DX WOD, 30"H, DX			
	SIZE	Cage Code:	DWG. NO.:	REV
MATERIAL: 5052-H32X.125" ASTM-B209M4	D	3B5Y5	00267	D
PAINT: Diamond Vogel Beige Gloss Texture FT-0320	SCALE: 1:12	WEIGHT:		SHEET 3 OF 3
DO NOT SCALE DRAWING				

DDB FORM 7.1-REV.K 08/02/17

UNCLASSIFIED PUBLIC
THE INFORMATION CONTAINED IN THIS DRAWING IS THE SOLE PROPERTY OF DDB Unlimited, INC. ANY
REPRODUCTION IN PART OR AS A WHOLE WITHOUT THE WRITTEN PERMISSION OF DDB Unlimited, INC. IS PROHIBITED.

File Location: (DDB) (EPDM Vault)
C:\DDB\Drawing Requests\Customers\DDB WEB DWG\WOD Family WEB\DR-00267 (WOD-30DX

DDB UNLIMITED®

An ISO 9001 Certified company

WOD Series

WOD-30DDC

Made in America

Believing in American Craftsmanship

15 YEAR WARRANTY

Why Choose the WOD Series?

The WOD series of enclosures are the ultimate choice for your outdoor racking requirements. Being made of our own rugged Alumiflex®, you'll find it noticeably lighter than steel, yet strong enough to rack even the heaviest equipment. When choosing the WOD series, you have handpicked the highest value in American construction. The WOD-30DDC includes the standard features you have come to expect with DDB, incorporating the versatile strut system for adjustable racking, the security of a 3-point locking system and our patented Alumishield® solar cap to manage heat loads. For those who need more than just our standard enclosure, DDB can also make a truly customized solution with our many available options including HVAC, providing a climate-controlled environment for any electronic equipment, electrical load panels and cable entry solutions to name a few. All of this comes together to create an enclosure able to meet all the unique needs your customers have been seeking. DDB offers a state-of-the-art design, a competitive price, benchmark lead times and a guaranteed delivery, all backed up with an industry leading 15-year warranty on every enclosure. Put DDB's substantial stock to work for you today. Contact our professional staff to assist you with your made-to-order solution.



Features

0.125" Aluminum Construction

Stainless Steel External Hardware/Hinge

3 Point Lock System

Heavy Duty Out-Door Construction

Front and Rear Access

Custom Colors Available

Cream & Red Powder-Coat in Stock

Flexible and Scalable

15 Year Warranty

Quick Shipping

Application Types

Telecommunications
Wireless/Broadband
Fiber Optics
Back Haul
Small Cell/DAS
Public Safety
Utility
Base Station
Military
Trailer-Based Communications
Wi-Fi
LTEE/4G/5G



Industry Standards:

NEMA 3R as shown

NEMA 4 and 4X configurable (unlisted to environmental rating)

WOD Series Listed to UL 50/50E Type 4 Available

ETL listed to UL Standard 60950-1/CSA 22.2C

Weight and Dimensions

Approximate Exterior Enclosure Dimensions:

32"H x 32"W x 39"D

Shipping Dimensions:

42“W x 42“L –Palletized

Approximate Shipping Weight:

170 lbs.

2301 S. HWY 77 Pauls Valley, OK 73075
T: (800) 753-8459 – F: (877) 220-7236
sales@ddbunlimited.com www.ddbunlimited.com

DDB UNLIMITED®

An ISO 9001 Certified company

WOD Series

WOD-30DDC

Made in America

Believing in American Craftsmanship

15 YEAR WARRANTY



Features

1. Solar Shield (Alumishield)
2. Front and Rear 19” and 23” Reversable Racking Rails
3. Rear Access Door
4. Stainless Steel Door Hinge
5. 3 Point Locking System
6. Powder-Coat Cream
7. Reusable Vent Filters

2301 S. HWY 77 Pauls Valley, OK 73075
T: (800) 753-8459 – F: (877) 220-7236
sales@ddbunlimited.com www.ddbunlimited.com

WEB DRAWING (NOT FOR FABRICATION)

REVISIONS		
REV.	DESCRIPTION	DATE
A	Initial Web Drawing per DR-00134	6/10/2013
B	Revise to incorporate new components and new drawing template pdr DR-00908	5/13/2014
C	UPDATED DRAWING TO NEW FORMAT PER DR-01940	4/10/2019
D	UPDATED DRAWING WITH DOOR RODS WITH ROLLERS PER DR-02269	4/24/2020

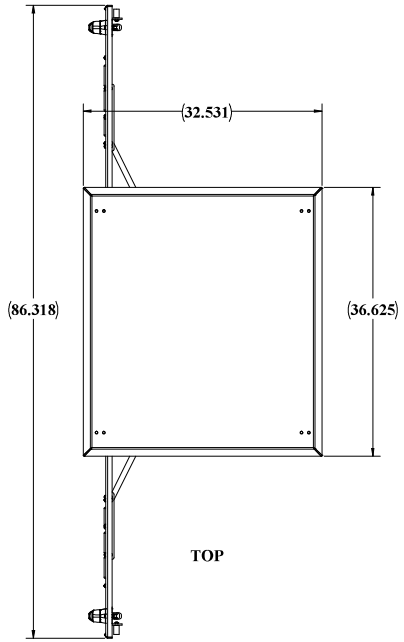

TOP

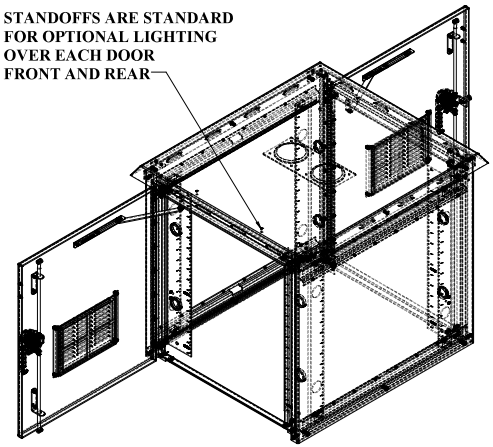

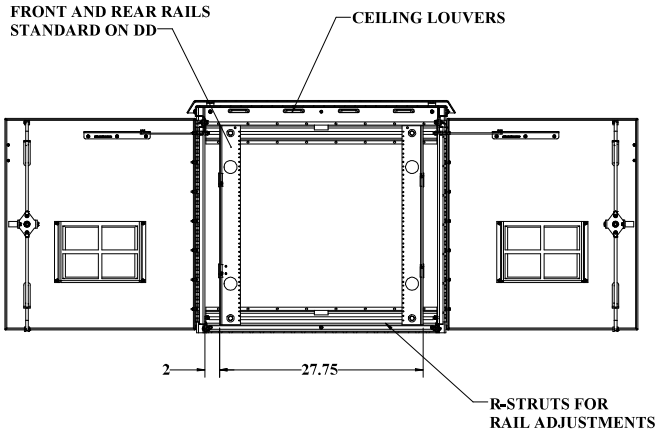

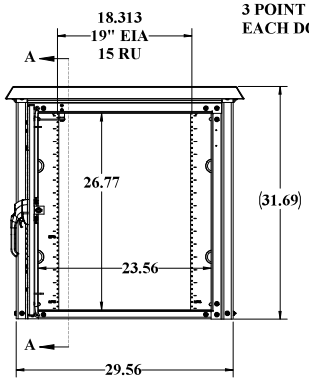

FRONT

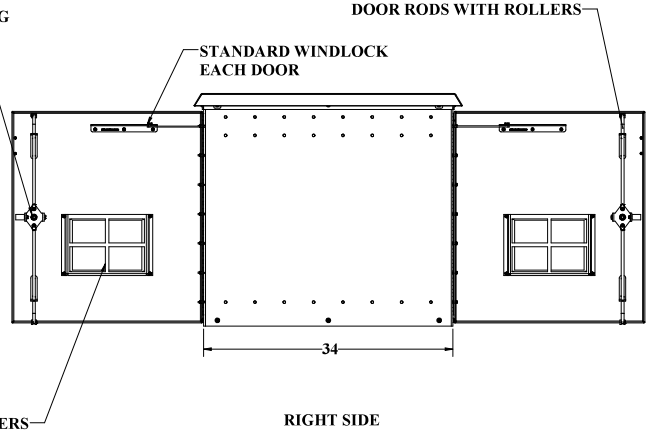

RIGHT SIDE

WEB DRAWING (NOT FOR FABRICATION)

UNLESS OTHERWISE SPECIFIED:		NAME	DATE	DDB Unlimited Inc.			
DIMENSIONS ARE IN INCHES	Modeled by:	DDB	5/14/2014	WOD-XXXX			
ANGULAR: MACH ± BEND ± TWO PLACE DECIMAL ± THREE PLACE DECIMAL ±	Drawn by:	aerose	04/10/19	WOD, 30"H, DD			
ALL HOLES PLATED ●	Sales.Rep.	Bryan C	6/25/2013	SIZE	Cage Code:	DWG. NO.:	REV
MATERIAL THICKNESS ±	Q.A. Appr.	tony	04/27/20	D	3S5Y5	00269	D
MATERIAL: 5052-H32/0.125" ASTM-B209M	Prod.Mgr.	ClarkK	04/28/20				
PAINT: Textured Vinyl Ridge Gloss Texture PG070	Control Number:			SCALE: 1:12	WEIGHT: 137 lbs.	SHEET 1 OF 3	
DO NOT SCALE DRAWING							

DDB FORM 7.1-2 REV.F 05/02/19

UNCLASSIFIED PUBLIC

File Location: [DDB]/EPDM Vault/
C:\DDB\Drawing Requests\Customers\DDB WEB DWG\WOD Family WEB\DR-00269 (WOD-30 WEB)\

WEB DRAWING (NOT FOR FABRICATION)

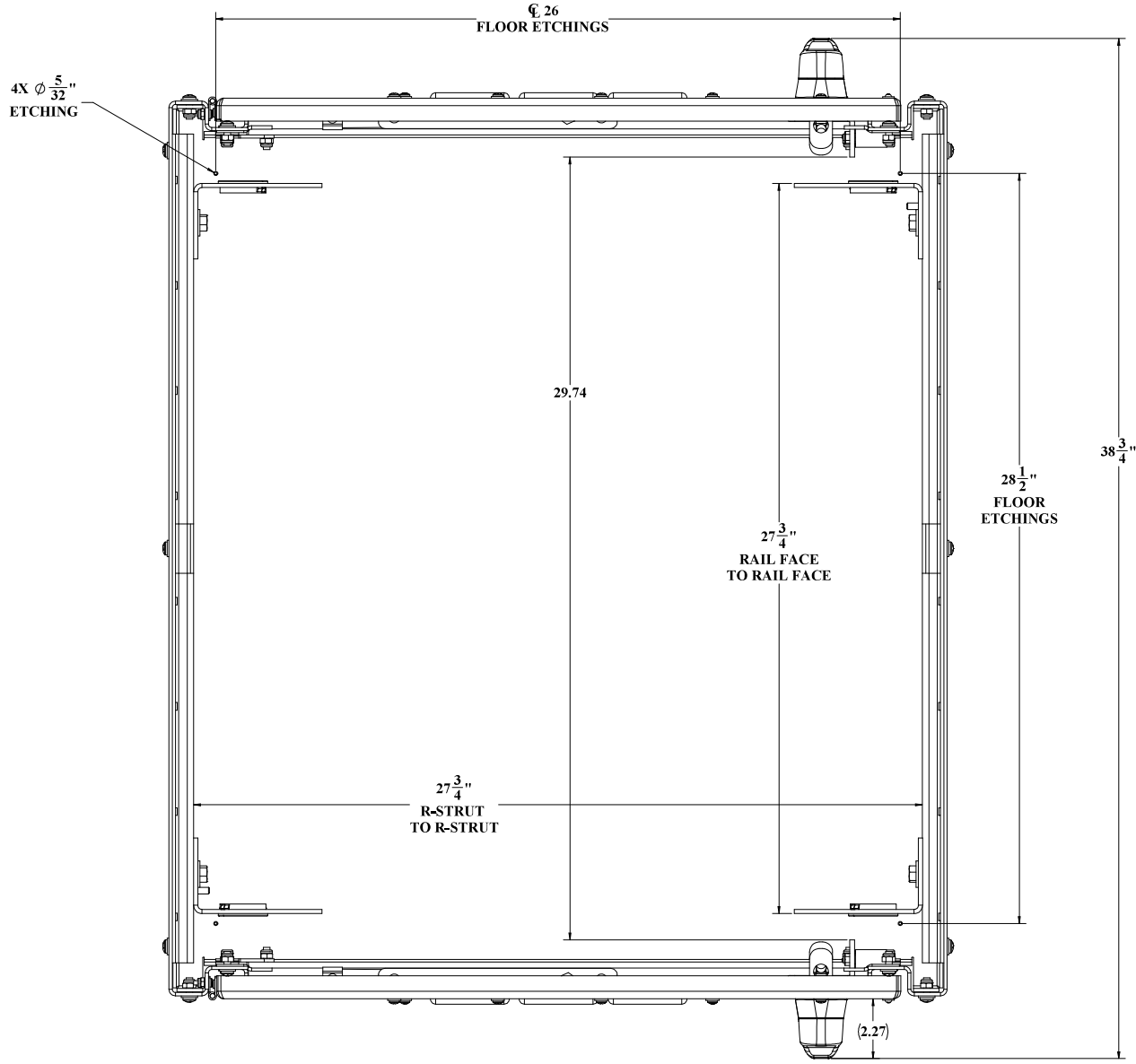

TOP VIEW
CEILING AND ALUMASHIELD NOT SHOWN

WEB DRAWING (NOT FOR FABRICATION)

UNLESS OTHERWISE SPECIFIED:	DDB Unlimited Inc.			
DIMENSIONS ARE IN INCHES ANGULAR: ±1° FRACTIONAL/NO DECIMAL: ±0.125 TWO PLACE DECIMAL: ±.010 THREE PLACE DECIMAL: ±.005 ALL HOLES ±0.005	DD Closed Enclosure, Family, WOD DD Closed			
	SIZE	Cage Code:	DWG. NO.:	REV
	D	3B5Y5	00269	D
MATERIAL: 5052-H32X0.125" ASTM-B209M4				
PAINT: Diamond Vogel Beige Gloss Texture ET-0320	SCALE: 1:12	WEIGHT:		SHEET 2 OF 3
DO NOT SCALE DRAWING				

DDB FORM 7.1-REV.K 08/02/17

UNCLASSIFIED PUBLIC
THE INFORMATION CONTAINED IN THIS DRAWING IS THE SOLE PROPERTY OF DDB Unlimited, INC. ANY
REPRODUCTION IN PART OR AS A WHOLE WITHOUT THE WRITTEN PERMISSION OF DDB Unlimited, INC. IS PROHIBITED.

File Location: (DDB) (EPDM Vault)
C:\DDB\Drawing Requests\Customers\DDB WEB DWG\WOD Family WEB\DR-00269 (WOD-30DD

WEB DRAWING (NOT FOR FABRICATION)

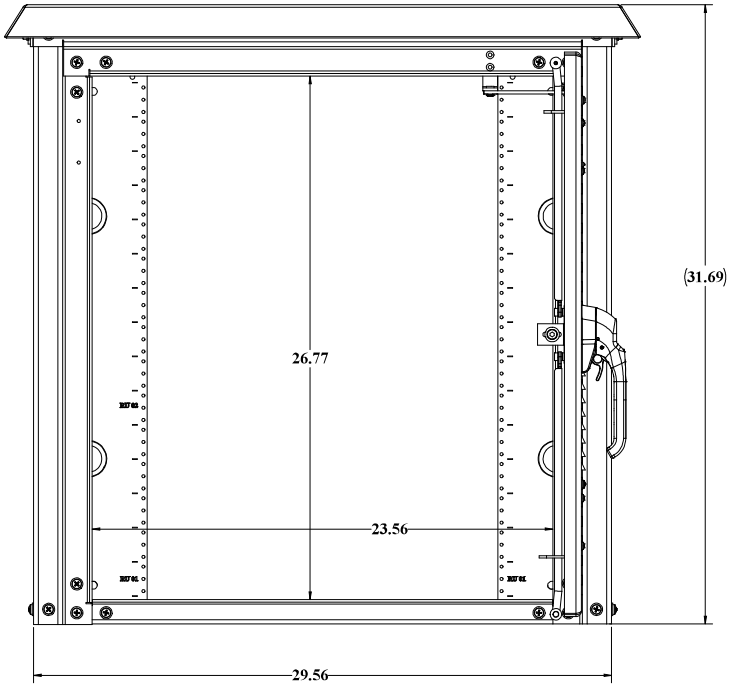

BACK VIEW
GASKET NOT SHOWN

WEB DRAWING (NOT FOR FABRICATION)

UNLESS OTHERWISE SPECIFIED:	DDB Unlimited Inc.			
DIMENSIONS ARE IN INCHES ANGULAR: ±1° FRACTIONAL/NO DECIMAL: ±0.125 TWO PLACE DECIMAL: ±0.010 TWO PLACE DECIMAL: ±0.030 THREE PLACE DECIMAL: ±0.005 ALL EDGES #100GB	WOD-30DD WOD, 30"H, DD			
	SIZE	Cage Code:	DWG. NO.:	REV
	D	3B5Y5	00269	D
MATERIAL: 5052-H32X.125" ASTM-B209M4				
PAINT: Diamond Vogel Beige Gloss Texture ET-6320	SCALE: 1:12	WEIGHT:		SHEET 3 OF 3
DO NOT SCALE DRAWING				

DDB FORM 7.1-REV.K 08/02/17

UNCLASSIFIED PUBLIC
THE INFORMATION CONTAINED IN THIS DRAWING IS THE SOLE PROPERTY OF DDB Unlimited, INC. ANY
REPRODUCTION IN PART OR AS A WHOLE WITHOUT THE WRITTEN PERMISSION OF DDB Unlimited, INC. IS PROHIBITED.

File Location: (DDB) EPDM Vault:
C:\DDB\Drawing Requests\Customers\DDB WEB DWG\WOD Family WEB\DR-00269 (WOD-30DD

DDB UNLIMITED®

An ISO 9001/27001 Certified company

WOD Series

WOD-30DDXC

Made in America

Believing in American Craftsmanship

15 YEAR WARRANTY

Why Choose the WOD Series?

The WOD series of enclosures are the ultimate choice for your outdoor racking requirements. Being made of our own rugged Alumiflex®, you'll find it noticeably lighter than steel, yet strong enough to rack even the heaviest equipment. When choosing the WOD series, you have handpicked the highest value in American construction. The WOD-30DDXC includes the standard features you have come to expect with DDB, incorporating the versatile strut system for adjustable racking, the security of a 3-point locking system and our patented Alumishield® solar cap to manage heat loads. For those who need more than just our standard enclosure, DDB can also make a truly customized solution with our many available options including HVAC, providing a climate-controlled environment for any electronic equipment, electrical load panels and cable entry solutions to name a few. All of this comes together to create an enclosure able to meet all of the unique needs your customers have been seeking. DDB offers a state-of-the-art design, a competitive price, benchmark lead times and a guaranteed delivery, all backed up with an industry leading 15-year warranty on every enclosure. Put DDB's substantial stock to work for you today. Contact our professional staff to assist you with your made-to-order solution.



Features

0.125" Aluminum Construction

Stainless Steel External Hardware/Hinge

3 Point Lock System

Heavy Duty Out-Door Construction

Front and Rear Access

Custom Colors Available

Cream Powder Coat in Stock

Flexible and Scalable

15 Year Warranty

Quick Shipping

Application Types

Telecommunications
Wireless/Broadband
Fiber Optics
Back Haul
Small Cell/DAS
Public Safety
Utility
Base Station
Military
Trailer-Based Communications
Wi-Fi
LTEE/4G/5G



Industry Standards:

NEMA 3R as shown

NEMA 4 and 4X configurable (unlisted to environmental rating)

WOD Series Listed to UL 50/50E Type 4 Available

ETL listed to UL Standard 60950-1/CSA 22.2C

Weight and Dimensions

Approximate Exterior Enclosure Dimensions:

32"H x 32"W x 47"D

Shipping Dimensions:

52"D x 42"W - Palletized

Approximate Shipping Weight:

194 lbs.

2301 S. HWY 77 Pauls Valley, OK 73075
T: (800) 753-8459 – F: (877) 220-7236
sales@ddbunlimited.com www.ddbunlimited.com

An ISO 9001/27001 Certified company

WOD Series

WOD-30DDXC

Made in America

Believing in American Craftsmanship

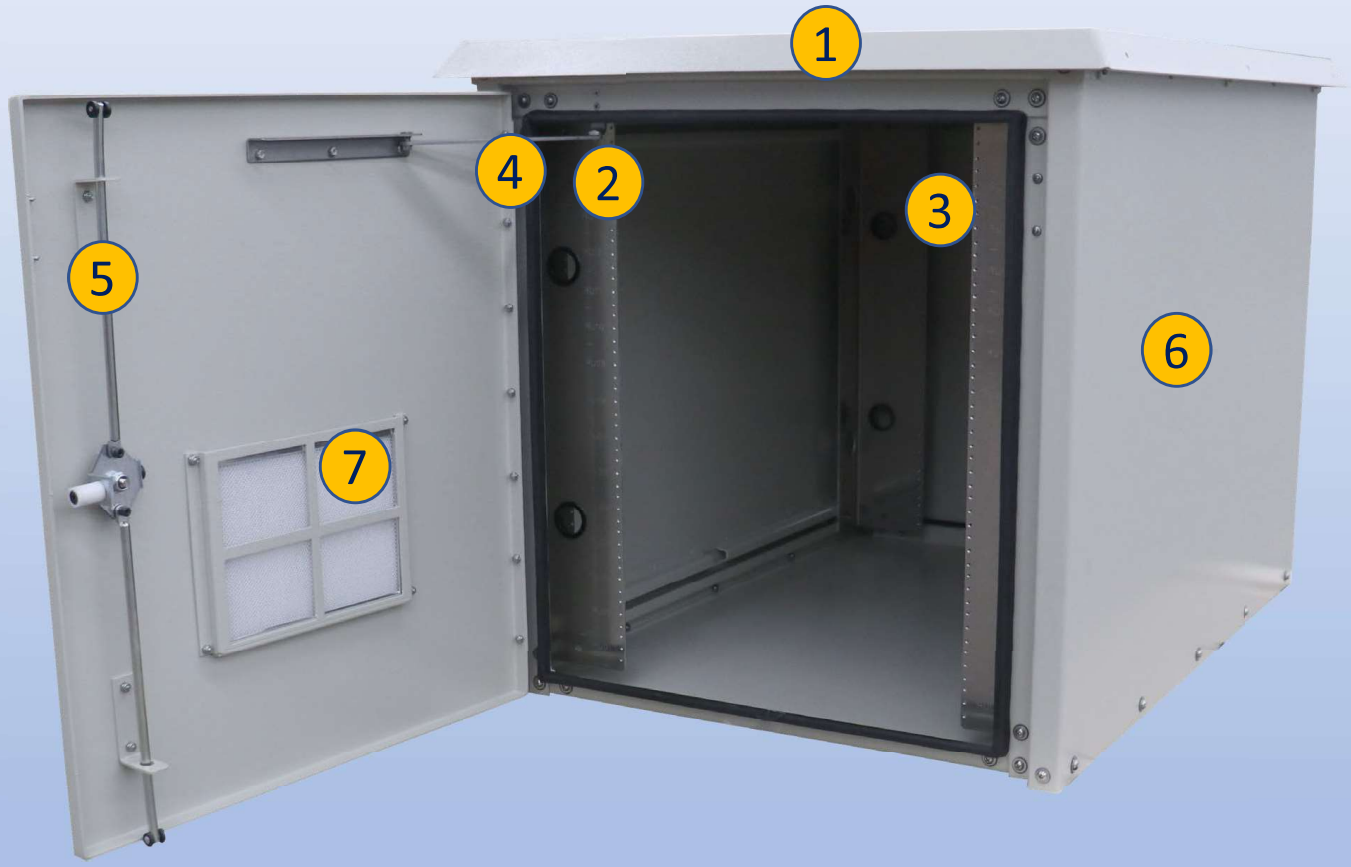

Features

1. Solar Shield (Alumishield)
2. Front and Rear 19” and 23” Reversable Racking Rails
3. Rear Access Door
4. Stainless Steel Door Hinge
5. 3 Point Locking System
6. Powder-Coat Cream
7. Reusable Vent Filters

2301 S. HWY 77 Pauls Valley, OK 73075
T: (800) 753-8459 – F: (877) 220-7236
sales@ddbunlimited.com www.ddbunlimited.com

WEB DRAWING (NOT FOR FABRICATION)

REVISIONS		
REV.	DESCRIPTION	DATE
A	Initial Web Drawing per DR-00134	6/10/2013
B	Revise to incorporate new components and new drawing template pdr DR-00909	5/13/2014
C	UPDATED DRAWING TO NEW FORMAT PER DR-01941	4/10/2019
D	UPDATED WEB DRAWING WITH DOOR RODS WITH ROLLERS PER DR-02270	4/24/2020

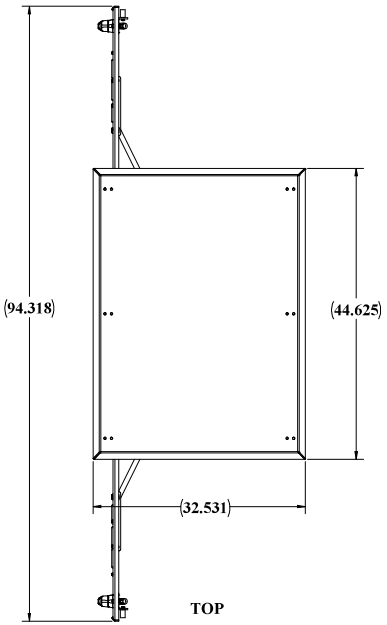

TOP

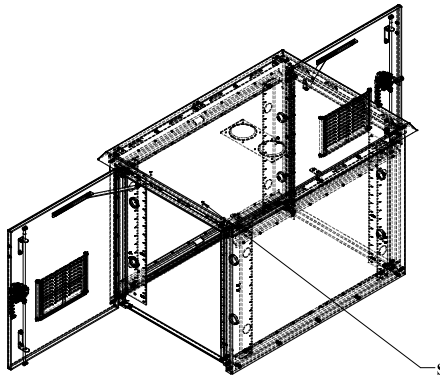

STANDOFFS ARE STANDARD FOR OPTIONAL LIGHTING OVER EACH DOOR FRONT AND REAR

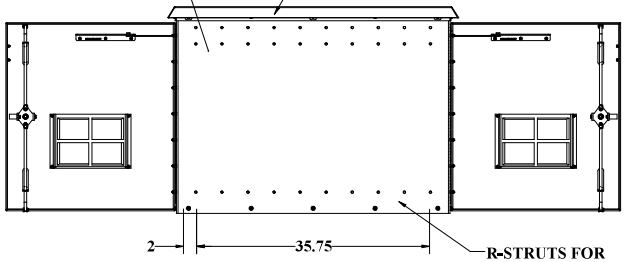

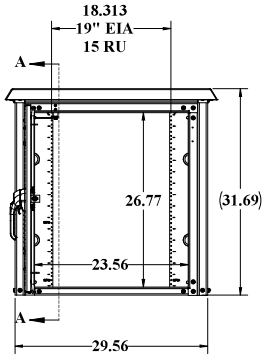

FRONT

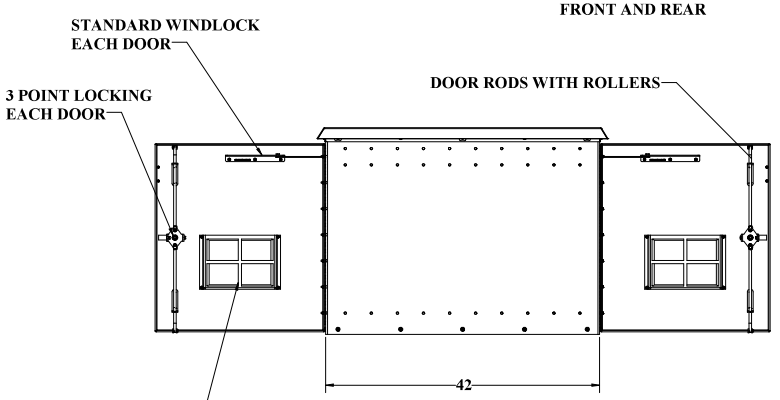

RIGHT SIDE

WEB DRAWING (NOT FOR FABRICATION)

UNLESS OTHERWISE SPECIFIED: DIMENSIONS ARE IN INCHES

	NAME	DATE
Model by:	DDB	5/14/2014
Drawn by:	aerose	04/10/19
Sales.Rep.	Bryan C	6/25/2013
Q.A. Appr.	troy	04/27/20
Prod.Mgr.	ClarkK	04/28/20

DO NOT SCALE DRAWING

MATERIAL: 5052-H32/0.125" ASTM-B209M

PAINT: Textured Super Strike Gloss Ivory Cat#50

Control Number:

DDB Unlimited Inc.

WOD-XXXX
WOD, 30"H, DDX

SIZE	Cage Code:	DWG. NO.:	REV
D	3E5Y5	00271	D

SCALE: 1:12 | WEIGHT: 149 lbs. | SHEET 1 OF 3

DDB FORM: 7.1-2 REV.F 05/02/19

UNCLASSIFIED PUBLIC

File Location: (DDB)\EPDM Vault\
C:\DDB\Drawing Requests\Customers\DDB WEB DWG\WOD Family WEB\DR-00271 (WOD-30DDX WEB)\

WEB DRAWING (NOT FOR FABRICATION)

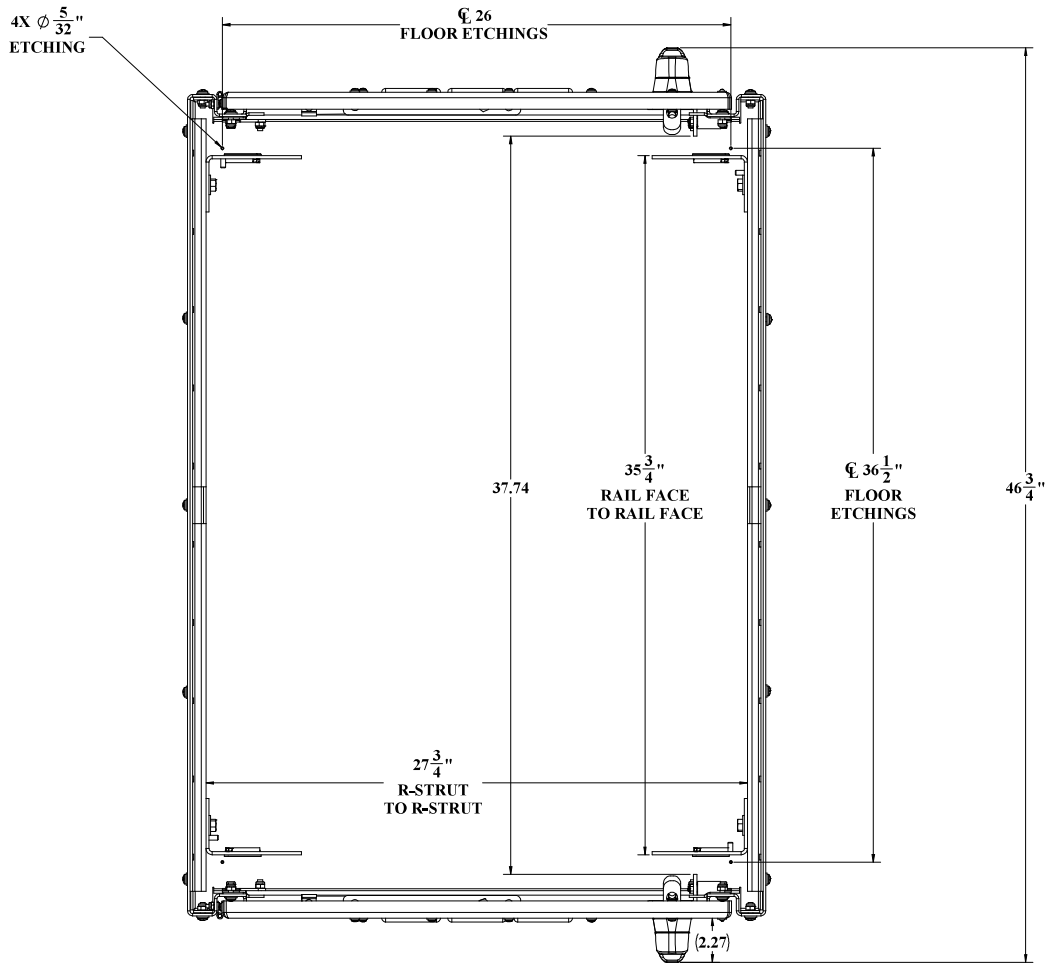

TOP VIEW
CEILING AND ALUMASHIELD NOT SHOWN

DDB FORM 7.1-7 REV.K 08/02/17

WEB DRAWING (NOT FOR FABRICATION)

UNLESS OTHERWISE SPECIFIED:	DDB Unlimited Inc.		
DIMENSIONS ARE IN INCHES ANGULAR: ±1° FRACTIONAL/NO DECIMAL: ±0.1250 TWO PLACE DECIMAL: ±0.0500 THREE PLACE DECIMAL: ±0.0100 ALL EDGES ##SHP##	DDX Closed Enclosure, Family, WOD DDX Closed		
	SIZE: D	Cage Code: 385Y5	DWG. NO.: 00271 REV: D
MATERIAL: 5052-H32X.125" ASTM-B209M4			
PAINT: Diamond Vogel, Beige Gloss Texture F3-9320	SCALE: 1:12	WEIGHT:	SHEET 2 OF 3
DO NOT SCALE DRAWING			

UNCLASSIFIED PUBLIC
THE INFORMATION CONTAINED IN THIS DRAWING IS THE SOLE PROPERTY OF DDB Unlimited, INC. ANY
REPRODUCTION IN PART OR AS A WHOLE WITHOUT THE WRITTEN PERMISSION OF DDB Unlimited, INC. IS PROHIBITED.

File Location: (DDB)(EPDM Vault)
C:\DDB\Drawing Requests\Customers\DDB WEB DWG\WOD Family WEB\DR-00271 (WOD-

WEB DRAWING (NOT FOR FABRICATION)

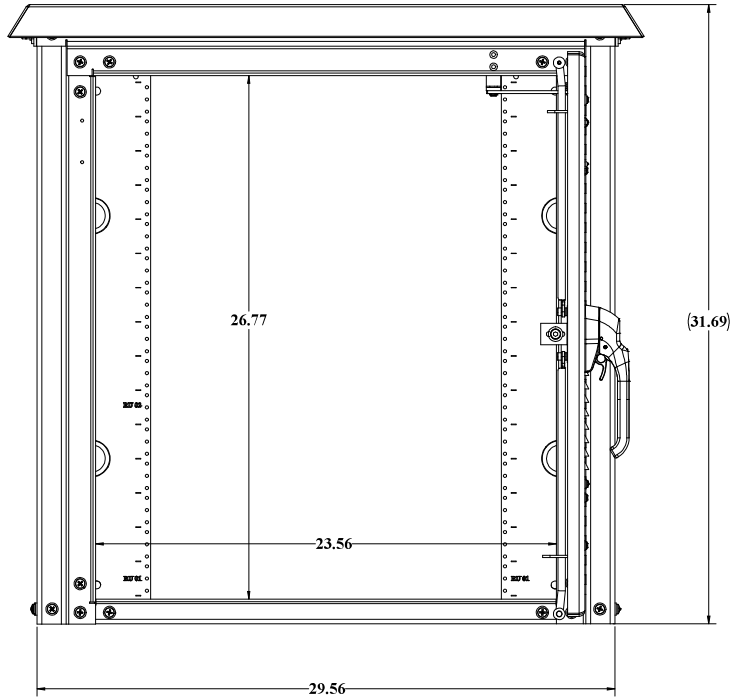

BACK VIEW
GASKET NOT SHOWN

WEB DRAWING (NOT FOR FABRICATION)

UNLESS OTHERWISE SPECIFIED:	***DDB Unlimited Inc.***
DIMENSIONS ARE IN INCHES ANGULAR: ±1° FRACTIONAL/NO DECIMAL: ±0.125 TWO PLACE DECIMAL: ±0.030 THREE PLACE DECIMAL: ±0.010 ALL EDGES ##SHARP	WOD-30DDX WOD, 30"H, DDXWOD-30DDX
SIZE: D	Cage Code: 385Y5 — DWG. NO.: 00271 — REV: D
MATERIAL: 5052-H32XR.125" ASTM-B209M4	
PAINT: Diamond Vogel, Beige Gloss Texture F3-9320	
DO NOT SCALE DRAWING	SCALE: 1:12 — WEIGHT: — SHEET 3 OF 3

DDB FORM 7.1-REV.K 08/02/17

UNCLASSIFIED PUBLIC
THE INFORMATION CONTAINED IN THIS DRAWING IS THE SOLE PROPERTY OF DDB Unlimited, INC. ANY
REPRODUCTION IN PART OR AS A WHOLE WITHOUT THE WRITTEN PERMISSION OF DDB Unlimited, INC. IS PROHIBITED.

File Location: (DDB)(EPDM Vault)
C:\DDB\Drawing Requests\Customers\DDB WEB DWG\WOD Family WEB\DR-00271 (WOD-

An ISO 9001 Certified company

WOD Series

WOD-50DXC

Made in America

Believing in American Craftsmanship

Why Choose the WOD Series?

The WOD series of enclosures are the ultimate choice for your outdoor racking requirements. Being made of our own rugged Alumiflex®, you'll find it noticeably lighter than steel, yet strong enough to rack even the heaviest equipment. When choosing the WOD series, you have handpicked the highest value in American construction. The WOD-50DXC includes the standard features you have come to expect with DDB, incorporating the versatile strut system for adjustable racking, the security of a 3-point locking system and our patented Alumishield® solar cap to manage heat loads. For those who need more than just our standard enclosure, DDB can also make a truly customized solution with our many available options including HVAC, providing a climate-controlled environment for any electronic equipment, electrical load panels and cable entry solutions to name a few. All of this comes together to create an enclosure able to meet all of the unique needs your customers have been seeking. DDB offers a state-of-the-art design, a competitive price, benchmark lead times and a guaranteed delivery, all backed up with an industry leading 15-year warranty on every enclosure. Put DDB's substantial stock to work for you today. Contact our professional staff to assist you with your made-to-order solution.



Features

0.125" Aluminum Construction

Stainless Steel External Hardware/Hinge

3 Point Lock System

Heavy Duty Out-Door Construction

Front and Rear Access

Custom Colors Available

Cream & Red Powder-Coat in Stock

Flexible and Scalable

15 Year Warranty

Quick Shipping

Application Types

Telecommunications
Wireless/Broadband
Fiber Optics
Back Haul
Small Cell/DAS
Public Safety
Utility
Base Station
Military
Trailer-Based Communications
Wi-Fi
LTEE/4G/5G



Industry Standards:

NEMA 3R as shown
NEMA 4 and 4X configurable (unlisted to environmental rating)
WOD Series Listed to UL 50/50E Type 4 Available
ETL listed to UL Standard 60950-1/CSA 22.2C

Weight and Dimensions

Approximate Exterior Enclosure Dimensions:

51”H x 32”W x 30”D

Shipping Dimensions:

32”W x 42”L - Palletized

Approximate Shipping Weight:

183 lbs.

2301 S. HWY 77 Pauls Valley, OK 73075
T: (800) 753-8459 – F: (877) 220-7236
sales@ddbunlimited.com www.ddbunlimited.com

DDB UNLIMITED®

An ISO 9001 Certified company

WOD Series

WOD-50DXC

Made in America

Believing in American Craftsmanship

15 YEAR WARRANTY



Features

1. Solar Shield (Alumishield)
2. 19” and 23” Reversable Racking Rails
3. Rear Access Door
4. Stainless Steel Door Hinge
5. 3 Point Locking System
6. Powder-Coat Cream
7. Reusable Vent Filters

2301 S. HWY 77 Pauls Valley, OK 73075
T: (800) 753-8459 – F: (877) 220-7236
sales@ddbunlimited.com www.ddbunlimited.com

WEB DRAWING (NOT FOR FABRICATION)

REVISIONS		
REV.	DESCRIPTION	DATE
A	Initial Web Drawing per DR-00134	6/10/2013
B	revise to incorporate new components and new drawing template pdr DR-00910	5/15/2014
C	UPDATED TO 2019 STANDARDS	4/29/2019
D	UPDATED DRAWING WITH DOOR RODS WITH ROLLERS PER DR-02271	5/22/2020

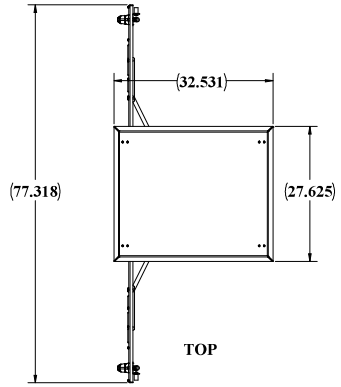

TOP

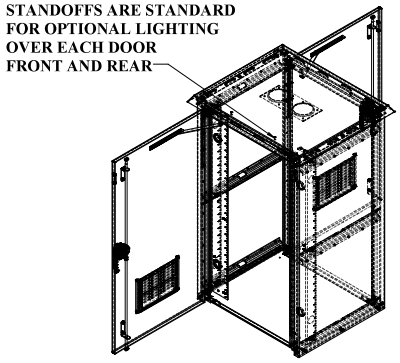

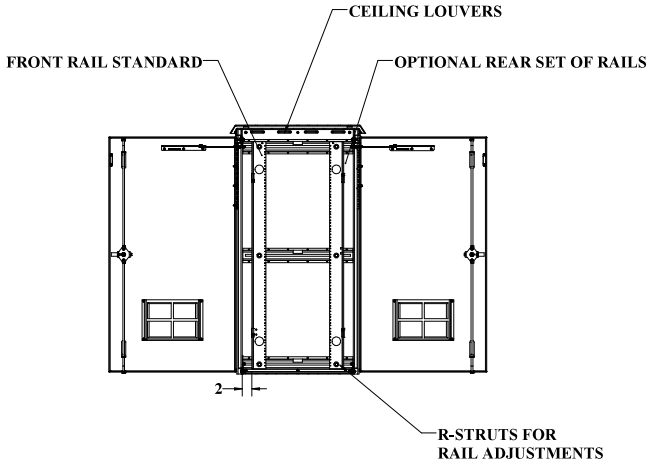

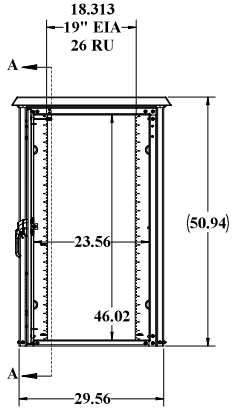

FRONT

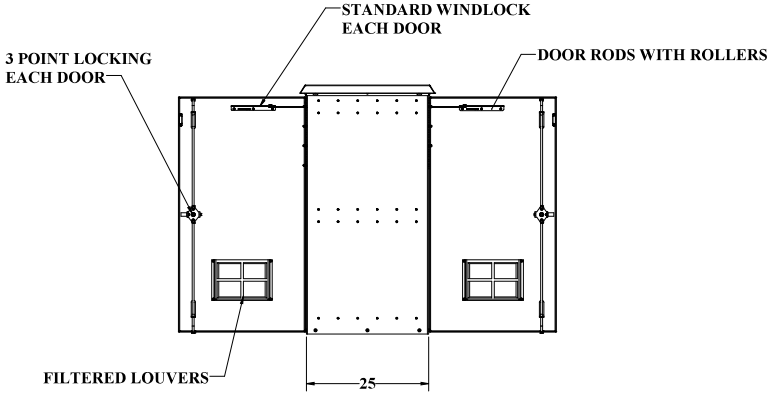

RIGHT SIDE

WEB DRAWING (NOT FOR FABRICATION)

UNLESS OTHERWISE SPECIFIED:		NAME	DATE	*DDB Unlimited Inc.*			
DIMENSIONS ARE IN INCHES	Modeled by:	DDB	5/15/2014	WOD-XXXX			
ANGULAR: MACH ± BEND ± TWO PLACE DECIMAL ± THREE PLACE DECIMAL ±	Drawn by:	Marvin8	06/17/19	WOD, 50"H, DX			
ALL EDGES BREAK ● MATERIAL FINISHES ±	Sales.Rep.	Bryan C	6/25/2013	SIZE	Cage Code:	DWG. NO.:	REV
	Q.A. Appr.	tony	05/26/20	D	3S5Y5	00272	D
MATERIAL:	Prod.Mgr.	ClarkK	05/26/20				
PAINT:	Control Number:			SCALE: 1:12	WEIGHT: 136 lbs.		SHEET 1 OF 3
DO NOT SCALE DRAWING							

DDB FORM: 7.1-2 REV:F 05/02/19

UNCLASSIFIED PUBLIC

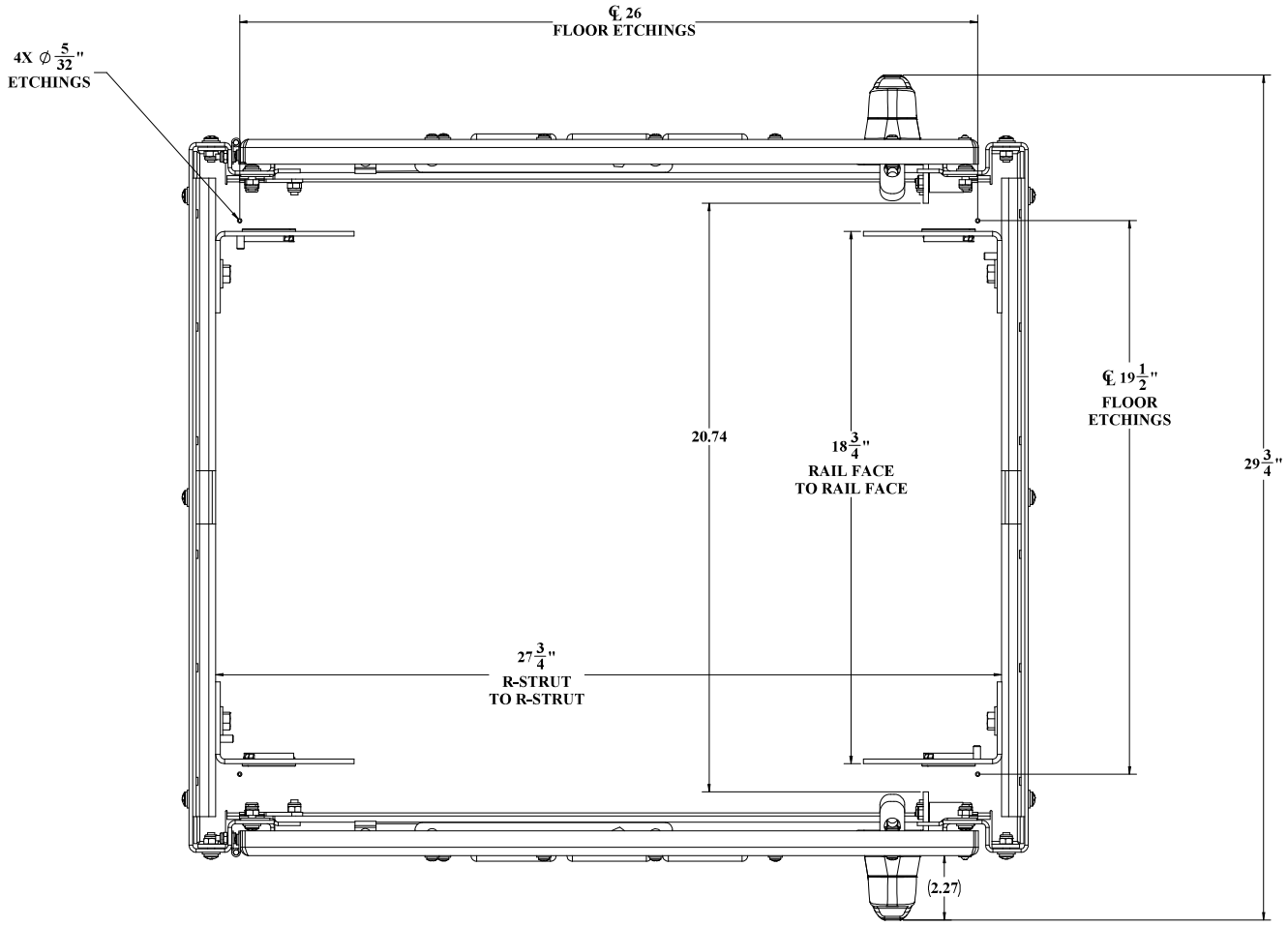

TOP VIEW
CEILING AND ALUMASHIELD NOT SHOWN

UNLESS OTHERWISE SPECIFIED:	DDB Unlimited Inc.
DIMENSIONS ARE IN INCHES ANGULAR: ±1° FRACTIONAL/NO DECIMAL: ±0.1250 TWO PLACE DECIMAL: ±0.0100 THREE PLACE DECIMAL: ±0.0050 ALL HOLES ±0.0050	DX Closed Enclosure, Family, WODDX Closed
MATERIAL: 5052-H32/5.063"-ASTM-B209-04	SIZE: D | Cage Code: 385Y5 | DWG. NO.: 00272 | REV: D
PAINT: DIAMOND VOGEL, BEIGE GLOSS TEXTURED POWDER	SCALE: 1:12 | WEIGHT: | SHEET 2 OF 3
DO NOT SCALE DRAWING	

DDB FORM 7.1-REV.K 08/02/17

UNCLASSIFIED PUBLIC
THE INFORMATION CONTAINED IN THIS DRAWING IS THE SOLE PROPERTY OF DDB Unlimited, INC. ANY
REPRODUCTION IN PART OR AS A WHOLE WITHOUT THE WRITTEN PERMISSION OF DDB Unlimited, INC. IS PROHIBITED.

File Location: (DDB) (EPDM Vault)
C:\DDB\Drawing Requests\Customers\DDB WEB DWG\WOD Family WEB\DR-00272 (WOD-50DX

WEB DRAWING (NOT FOR FABRICATION)

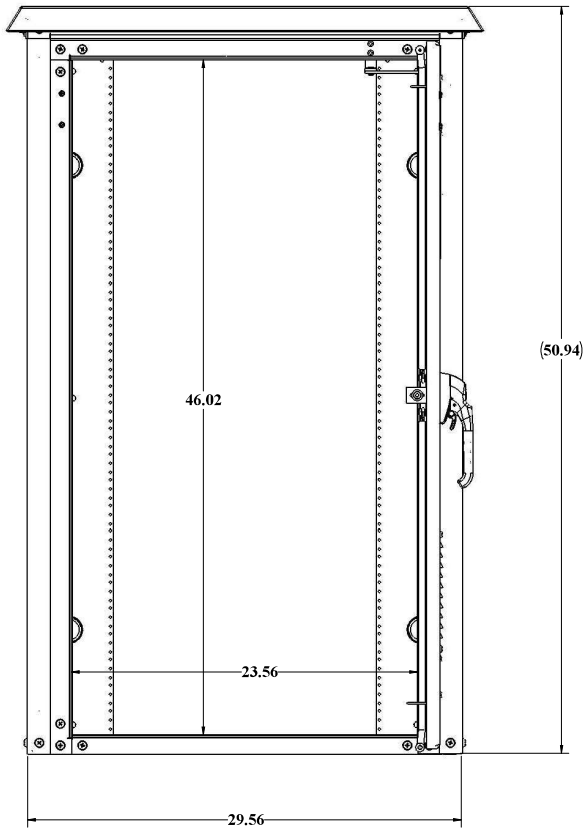

BACK VIEW
GASKET NOT SHOWN

DDB FORM 7.1-7 REV K 08/02/17

WEB DRAWING (NOT FOR FABRICATION)

UNLESS OTHERWISE SPECIFIED:	DDB Unlimited Inc.		
DIMENSIONS ARE IN INCHES ANGULAR: ±1° FRACTIONAL/NO DECIMAL: ±0.125 TWO PLACE DECIMAL: ±0.010 THREE PLACE DECIMAL: ±0.005 FOUR PLACE DECIMAL: ±0.0050 ALL EDGES #180GRIT	WOD-50DX WOD, 50"H, DX		
	SIZE: D	Cage Code: 385Y5	DWG. NO.: 00272 REV: D
MATERIAL: 5052-H32/5052-H34 - ASTM-B-209-04			
PAINT: SHADOW VOLCANO/BEIGE GLOSS TEXTURE-534650	SCALE: 1:12	WEIGHT:	SHEET 3 OF 3
DO NOT SCALE DRAWING			

UNCLASSIFIED PUBLIC
THE INFORMATION CONTAINED IN THIS DRAWING IS THE SOLE PROPERTY OF DDB Unlimited, INC. ANY
REPRODUCTION IN PART OR AS A WHOLE WITHOUT THE WRITTEN PERMISSION OF DDB Unlimited, INC. IS PROHIBITED.

File Location: (DDB) EPDM Vault:
C:\DDB\Drawing Requests\Customers\DDB WEB DWG\WOD Family WEB\DR-00272 (WOD-50DX

An ISO 9001 Certified company

WOD Series

WOD-50DDC

Made in America

Believing in American Craftsmanship

Why Choose the WOD Series?

The WOD series of enclosures are the ultimate choice for your outdoor racking requirements. Being made of our own rugged Alumiflex®, you'll find it noticeably lighter than steel, yet strong enough to rack even the heaviest equipment. When choosing the WOD series, you have handpicked the highest value in American construction. The WOD-50DDC includes the standard features you have come to expect with DDB, incorporating the versatile strut system for adjustable racking, the security of a 3-point locking system and our patented Alumishield® solar cap to manage heat loads. For those who need more than just our standard enclosure, DDB can also make a truly customized solution with our many available options including HVAC, providing a climate-controlled environment for any electronic equipment, electrical load panels and cable entry solutions to name a few. All of this comes together to create an enclosure able to meet all of the unique needs your customers have been seeking. DDB offers a state-of-the-art design, a competitive price, benchmark lead times and a guaranteed delivery, all backed up with an industry leading 15-year warranty on every enclosure. Put DDB's substantial stock to work for you today. Contact our professional staff to assist you with your made-to-order solution.



Features

0.125" Aluminum Construction

Stainless Steel External Hardware/Hinge

3 Point Lock System

Heavy Duty Out-Door Construction

Front and Rear Access

Custom Colors Available

Cream & Red Powder-Coat in Stock

Flexible and Scalable

15 Year Warranty

Quick Shipping

Application Types

Telecommunications
Wireless/Broadband
Fiber Optics
Back Haul
Small Cell/DAS
Public Safety
Utility
Base Station
Military
Trailer-Based Communications
Wi-Fi
LTEE/4G/5G



Industry Standards:

NEMA 3R as shown

NEMA 4 and 4X configurable (unlisted to environmental rating)

WOD Series Listed to UL 50/50E Type 4 Available

ETL listed to UL Standard 60950-1/CSA 22.2C

Weight and Dimensions

Approximate Exterior Enclosure Dimensions:

51”H x 32”W x 39”D

Shipping Dimensions:

42”W x 42”D –Palletized

Approximate Shipping Weight:

224 lbs.

2301 S. HWY 77 Pauls Valley, OK 73075
T: (800) 753-8459 – F: (877) 220-7236
sales@ddbunlimited.com www.ddbunlimited.com

An ISO 9001 Certified company

WOD Series

WOD-50DDC

Made in America

Believing in American Craftsmanship



Features

1. Solar Shield (Alumishield)
2. Front and Rear 19” and 23” Reversable Racking Rails
3. Rear Access Door
4. Wind-Lock Installed on Front & Rear Doors
5. 3 Point Locking System
6. Powder-Coat Cream
7. Reusable Vent Filters

2301 S. HWY 77 Pauls Valley, OK 73075
T: (800) 753-8459 – F: (877) 220-7236
sales@ddbunlimited.com www.ddbunlimited.com

WEB DRAWING (NOT FOR FABRICATION)

REVISIONS		
REV.	DESCRIPTION	DATE
A	Initial Web Drawing per DR-00134	6/10/2013
B	revise to incorporate new components and new drawing template pdr DR-00911	5/15/2014
C	UPDATED TO 2019 FORMAT	4/30/2019
D	UPDATED DRAWING WITH DOOR RODS WITH ROLLERS PER DR-02272	6/05/2020

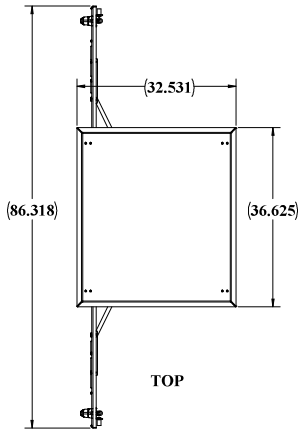

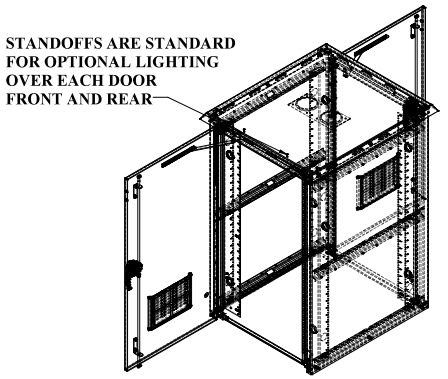

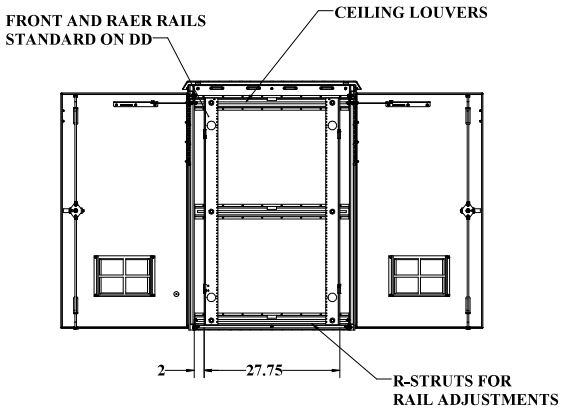

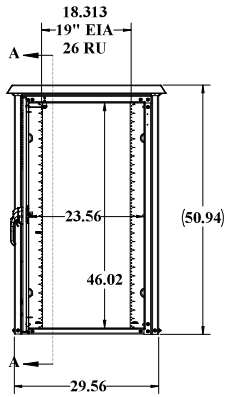

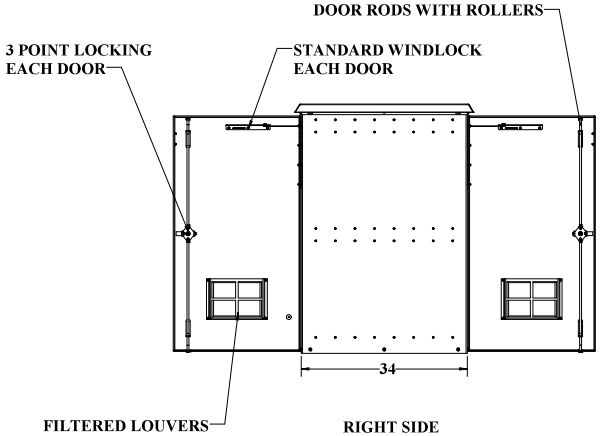

WEB DRAWING (NOT FOR FABRICATION)

UNLESS OTHERWISE SPECIFIED:		NAME	DATE	DDB Unlimited Inc.			
DIMENSIONS ARE IN INCHES	Model by:	DDB	5/15/2014	WOD-XXXX			
ANGULAR: MACH ± BEND ± TWO PLACE DECIMAL ± THREE PLACE DECIMAL ±	Drawn by:	Marvin5	01/30/19	WOD, 50"H, DD			
ALL EDGES BREAK ● MATERIAL / FINISH BREAK ●	Sales.Rep.	Bryan C	6/25/2013	SIZE	Cage Code:	DWG. NO.:	REV
	Q.A. Appr.	troy	06/08/20	D	3B5Y5	00273	D
MATERIAL: 5052-H32/H34 .125" ASTM-B209M	Prod.Mgr.	ClarkK	06/08/20				
PAINT: DIAMOND VOGEL HUSE GLOSS TEXTURE CAT#	DO NOT SCALE DRAWING	Control Number:		SCALE: 1:12	WEIGHT: 180 lbs.	SHEET 1 OF 3	

DDB FORM 7.1-2 REV.F 05/02/19

UNCLASSIFIED PUBLIC

File Location: (DDB)(PDM Vault)
C:\DDB\Drawing Requests\Customers\DDB WEB DWG\WOD Family WEB\DR-00273 (WOD-50 WEB)\

WEB DRAWING (NOT FOR FABRICATION)

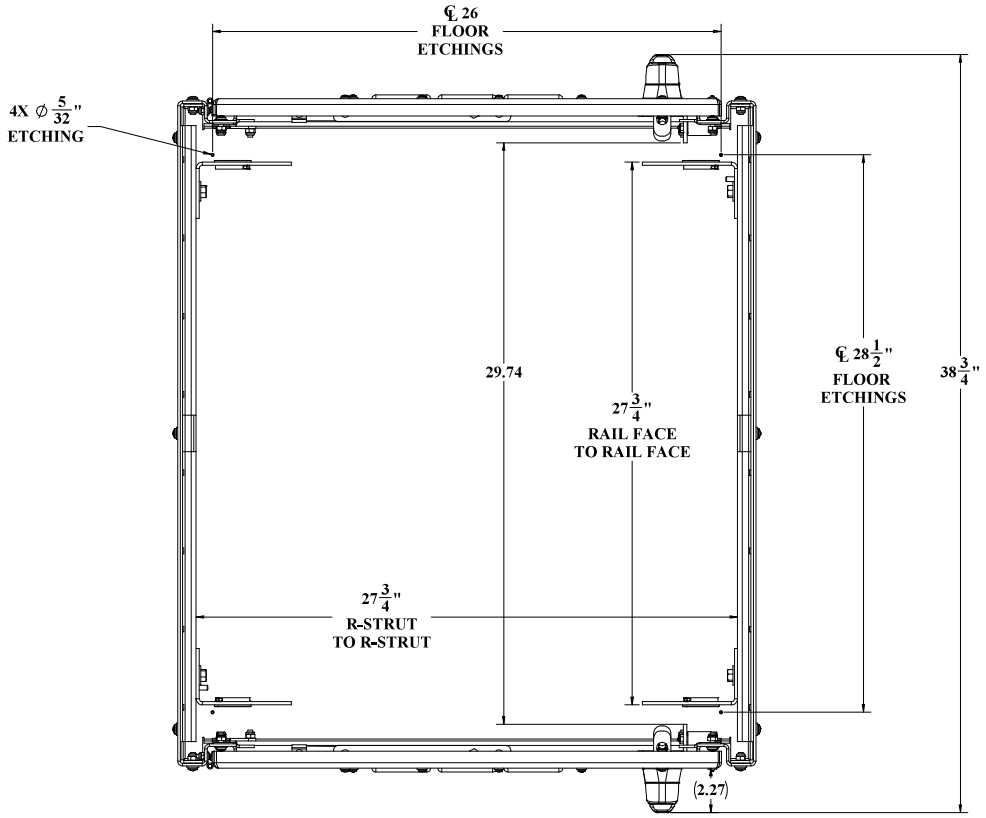

TOP VIEW
CEILING AND ALUMASHIELD NOT SHOWN

WEB DRAWING (NOT FOR FABRICATION)

UNLESS OTHERWISE SPECIFIED:	DDB Unlimited Inc.		
DIMENSIONS ARE IN INCHES ANGULAR: ±1° FRACTIONAL/NO DECIMAL: ±0.1250 TWO PLACE DECIMAL: ±.01250 THREE PLACE DECIMAL: ±.00500 ALL EDGES ⌀0.0050Ⓜ	DD Closed Enclosure, Family, WOD DD Closed		
	SIZE: D	Cage Code: 385Y5	DWG. NO.: 00273 REV: D
MATERIAL: 5052-H32 SHEET .125" ASTM-B-209/04			
PAINT: IMAGINEERS POWDER MIL GLOSS TEXTURE #34039			
DO NOT SCALE DRAWING	SCALE: 1:12	WEIGHT:	SHEET 2 OF 3

DDB FORM 7.1-REV.K 08/02/17

UNCLASSIFIED PUBLIC
THE INFORMATION CONTAINED IN THIS DRAWING IS THE SOLE PROPERTY OF DDB Unlimited, INC. ANY
REPRODUCTION IN PART OR AS A WHOLE WITHOUT THE WRITTEN PERMISSION OF DDB Unlimited, INC. IS PROHIBITED.

File Location: (DDB) EPDM Vault:
C:\DDB\Drawing Requests\Customers\DDB WEB DWG\WOD Family WEB\DR-00273 (WOD-50DD

WEB DRAWING (NOT FOR FABRICATION)

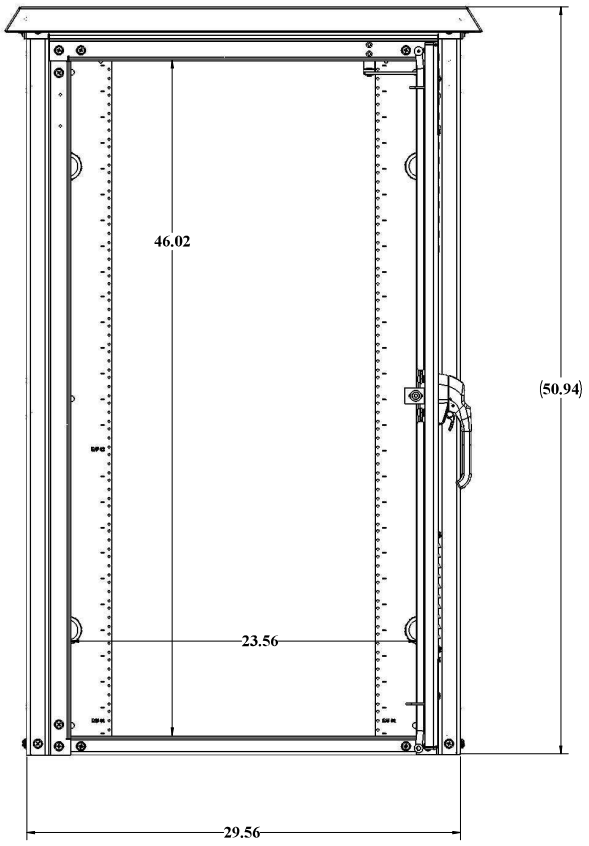

BACK VIEW
GASKET NOT SHOWN

DDB FORM 7.1-REV.K 08/03/17

WEB DRAWING (NOT FOR FABRICATION)

UNLESS OTHERWISE SPECIFIED:	DDB Unlimited Inc.		
DIMENSIONS ARE IN INCHES ANGULAR: ±1° FRACTIONAL/NO DECIMAL: ±0.1250 TWO PLACE DECIMAL: ±0.0100 THREE PLACE DECIMAL: ±0.0050 ALL HOLES ±0.0030	WOD-50DD WOD, 50"H, DD		
	SIZE: D	Cage Code: 3B5Y5	DWG. NO.: 00273 REV: D
MATERIAL: 5052-H32 SHEET .125" ASTM-B-209M4			
PAINT: SHADOW VOGUE/BEIGE GLOSS TEXTURE-TS4050	SCALE: 1:12	WEIGHT:	SHEET 3 OF 3
DO NOT SCALE DRAWING			

UNCLASSIFIED PUBLIC
THE INFORMATION CONTAINED IN THIS DRAWING IS THE SOLE PROPERTY OF DDB Unlimited, INC. ANY
REPRODUCTION IN PART OR AS A WHOLE WITHOUT THE WRITTEN PERMISSION OF DDB Unlimited, INC. IS PROHIBITED.

File Location: (DDB) EPDM Vault:
C:\DDB\Drawing Requests\Customers\DDB WEB DWG\WOD Family WEB\DR-00273 (WOD-50DD

An ISO 9001/27001 Certified company

WOD Series

WOD-50DDXC

Made in America

Believing in American Craftsmanship

15 YEAR WARRANTY

Why Choose the WOD Series?

The WOD series of enclosures are the ultimate choice for your outdoor racking requirements. Being made of our own rugged Alumiflex®, you'll find it noticeably lighter than steel, yet strong enough to rack even the heaviest equipment. When choosing the WOD series, you have handpicked the highest value in American construction. The WOD-50DDXC includes the standard features you have come to expect with DDB, incorporating the versatile strut system for adjustable racking, the security of a 3-point locking system and our patented Alumishield® solar cap to manage heat loads. For those who need more than just our standard enclosure, DDB can also make a truly customized solution with our many available options including HVAC, providing a climate-controlled environment for any electronic equipment, electrical load panels and cable entry solutions to name a few. All of this comes together to create an enclosure able to meet all of the unique needs your customers have been seeking. DDB offers a state-of-the-art design, a competitive price, benchmark lead times and a guaranteed delivery, all backed up with an industry leading 15-year warranty on every enclosure. Put DDB's substantial stock to work for you today. Contact our professional staff to assist you with your made-to-order solution.



Features

0.125" Aluminum Construction

Stainless Steel External Hardware/Hinge

3 Point Lock System

Heavy Duty Out-Door Construction

Front and Rear Access

Custom Colors Available

Cream & Red Powder-Coat in Stock

Flexible and Scalable

15 Year Warranty

Quick Shipping

Application Types

Telecommunications
Wireless/Broadband
Fiber Optics
Back Haul
Small Cell/DAS
Public Safety
Utility
Base Station
Military
Trailer-Based Communications
Wi-Fi
LTEE/4G/5G



Industry Standards:

NEMA 3R as shown

NEMA 4 and 4X configurable (unlisted to environmental rating)

WOD Series Listed to UL 50/50E Type 4 Available

ETL listed to UL Standard 60950-1/CSA 22.2C

Weight and Dimensions

Approximate Exterior Enclosure Dimensions:

51”H x 32”W x 47”D

Shipping Dimensions:

52”W x 42”D- Palletized

Approximate Shipping Weight:

253 lbs.

2301 S. HWY 77 Pauls Valley, OK 73075
T: (800) 753-8459 – F: (877) 220-7236
sales@ddbunlimited.com www.ddbunlimited.com

DDB UNLIMITED®

An ISO 9001/27001 Certified company

WOD Series

WOD-50DDXC

Made in America

Believing in American Craftsmanship

15 YEAR WARRANTY



Features

1. Solar Shield (Alumishield)
2. Front and Rear 19” and 23” Reversable Racking Rails
3. Rear Access Door
4. Stainless Steel Door Hinge
5. 3 Point Locking System
6. Powder-Coat Cream
7. Reusable Vent Filters

2301 S. HWY 77 Pauls Valley, OK 73075
T: (800) 753-8459 – F: (877) 220-7236
sales@ddbunlimited.com www.ddbunlimited.com

WEB DRAWING (NOT FOR FABRICATION)

REVISIONS		
REV.	DESCRIPTION	DATE
A	Initial Web Drawing per DR-00134	6/10/2013
B	revise to incorporate new components and new drawing template pdr DR-00929	5/15/2014
C	UPDATED TO 2019 STANDARDS	5/1/2019
D	UPDATED DRAWING WITH DOOR RODS WITH ROLLERS PER DR-02273	6/05/2020

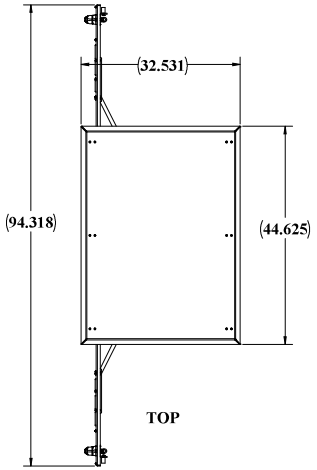

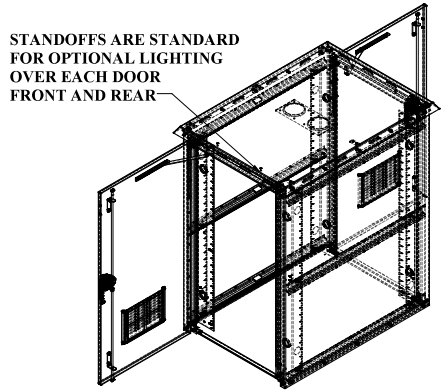

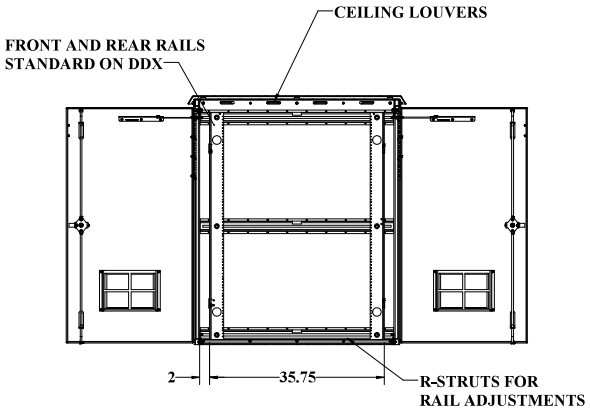

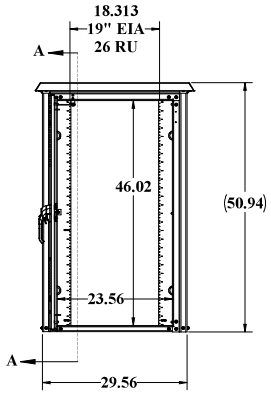

FRONT

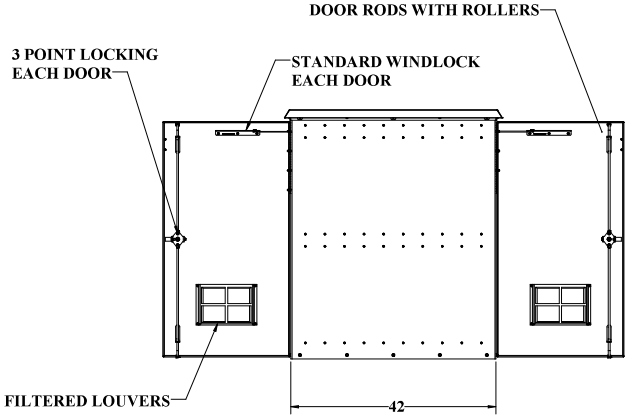

RIGHT SIDE

WEB DRAWING (NOT FOR FABRICATION)

UNLESS OTHERWISE SPECIFIED:		NAME	DATE	DDB Unlimited Inc.			
DIMENSIONS ARE IN INCHES	Modeled by:	DDB	03/13/14	WOD-XXXX			
ANGULAR: MACH ±1° BEND ±1° TWO PLACE DECIMAL ±.010 THREE PLACE DECIMAL ±.005	Drawn by:	aerose	06/05/20	WOD, 50"H, DDX			
ALL SHARP EDGES TO BE REMOVED. MATERIAL TO BE FREE OF ALL BURRS AND SHARP EDGES.	Sales.Rep.	Bryan C	06/25/13	SIZE	Cage Code:	DWG. NO.:	REV
	Q.A. Appr.	troy	06/25/20	D	3S5Y5	00693	D
MATERIAL: 5052-H32-ASTM-B209-04	Prod.Mgr.	ClarkK	06/25/20				
PAINT: BAKED POWDER COAT TEXTURE SATIN	DO NOT SCALE DRAWING	Control Number:		SCALE: 1:12	WEIGHT: 201 lbs.	SHEET 1 OF 3	

DDB FORM: 7.1-2 REV:F 05/02/19

UNCLASSIFIED PUBLIC

File Location: [DDB]|EPDM Vault|
C:\DDB\drawing requests\customers\ddb web dwg\wod family web\dr-00693 (wod-50dc web)\

WEB DRAWING (NOT FOR FABRICATION)

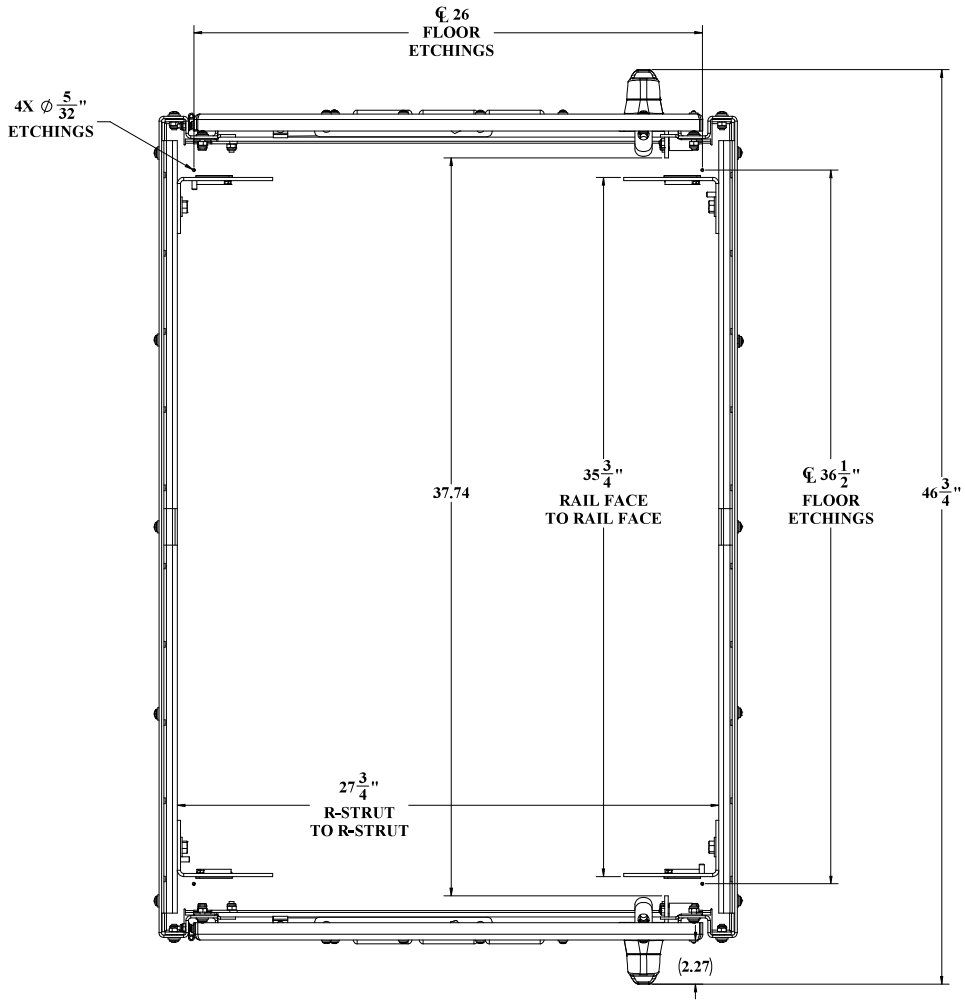

TOP VIEW
CEILING AND ALUMASHIELD NOT SHOWN

DDB FORM 7.1-REV.K 08/02/17

WEB DRAWING (NOT FOR FABRICATION)

UNLESS OTHERWISE SPECIFIED:	DDB Unlimited Inc.		
DIMENSIONS ARE IN INCHES ANGULAR: ±1° FRACTIONAL/NO DECIMAL: ±0.1250 TWO PLACE DECIMAL: ±0.0500 THREE PLACE DECIMAL: ±0.0100 ALL EDGES #180SB	DDX Closed Enclosure, Family, WOD DDX Closed		
	SIZE: D	Cage Code: 385Y5	DWG. NO.: 00693 REV: D
MATERIAL: 5052-H32-.125-.250-.500-.750-.1000-.1250			
PAINT: DIAMOND VOGEL BLUE GLOSS TEXTURE 15-6450	SCALE: 1:12	WEIGHT:	SHEET 2 OF 3
DO NOT SCALE DRAWING			

UNCLASSIFIED PUBLIC
THE INFORMATION CONTAINED IN THIS DRAWING IS THE SOLE PROPERTY OF DDB Unlimited, INC. ANY
REPRODUCTION IN PART OR AS A WHOLE WITHOUT THE WRITTEN PERMISSION OF DDB Unlimited, INC. IS PROHIBITED.

File Location: (DDB)(EPDM Vault)
C:\DDB\drawing requests\customers\ddb web dwg\wod family web\dk-00693 (wod-50ddx

WEB DRAWING (NOT FOR FABRICATION)

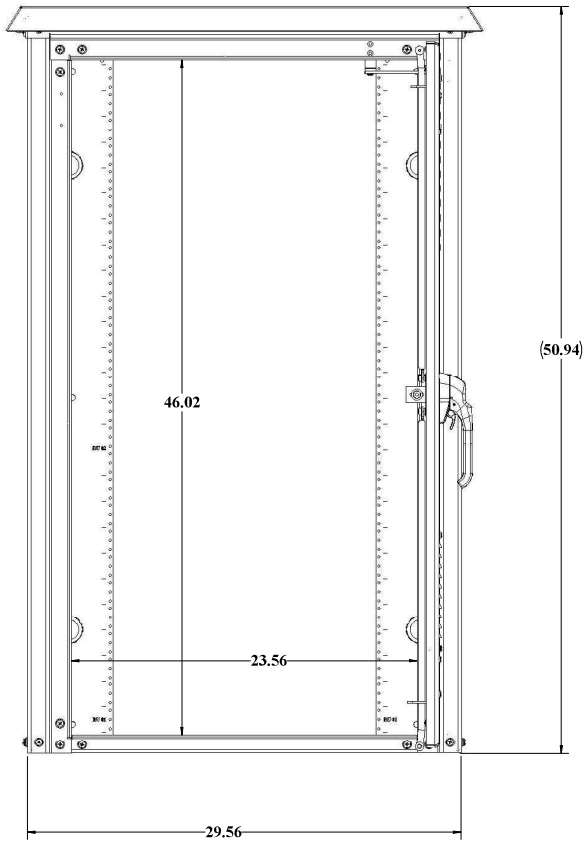

BACK VIEW
GASKET NOT SHOWN

WEB DRAWING (NOT FOR FABRICATION)

UNLESS OTHERWISE SPECIFIED:	DDB Unlimited Inc.		
DIMENSIONS ARE IN INCHES ANGULAR: ±1° FRACTIONAL/NO DECIMAL: ±0.1250 TWO PLACE DECIMAL: ±0.0500 THREE PLACE DECIMAL: ±0.0100 ALL EDGES ##SHARP	WOD-50DDX WOD, 50"H, DDX		
	SIZE: D	Cage Code: 385Y5	DWG. NO.: 00693	REV: D
MATERIAL: 5052-H32-.125-.250-.500-.750-.1000	SCALE: 1:12	WEIGHT:	SHEET 3 OF 3
PAINT: DIAMOND VOGEL HIGH GLOSS TEXTURE #34050	DO NOT SCALE DRAWING		

DDB FORM 7.1-REV.K 08/02/17

UNCLASSIFIED PUBLIC
THE INFORMATION CONTAINED IN THIS DRAWING IS THE SOLE PROPERTY OF DDB Unlimited, INC. ANY
REPRODUCTION IN PART OR AS A WHOLE WITHOUT THE WRITTEN PERMISSION OF DDB Unlimited, INC. IS PROHIBITED.

File Location: (DDB)(EPDM Vault)
C:\DDB\drawing requests\customers\ddb web dwg\wod family web\dk-00693 (wod-50ddx

An ISO 9001 Certified company

WOD Series

WOD-62DXC

Made in America

Believing in American Craftsmanship

15 YEAR WARRANTY

Why Choose the WOD Series?

The WOD series of enclosures are the ultimate choice for your outdoor racking requirements. Being made of our own rugged Alumiflex®, you'll find it noticeably lighter than steel, yet strong enough to rack even the heaviest equipment. When choosing the WOD series, you have handpicked the highest value in American construction. The WOD-62DXC includes the standard features you have come to expect with DDB, incorporating the versatile strut system for adjustable racking, the security of a 3-point locking system and our patented Alumishield® solar cap to manage heat loads. For those who need more than just our standard enclosure, DDB can also make a truly customized solution with our many available options including HVAC, providing a climate-controlled environment for any electronic equipment, electrical load panels and cable entry solutions to name a few. All of this comes together to create an enclosure able to meet all of the unique needs your customers have been seeking. DDB offers a state-of-the-art design, a competitive price, benchmark lead times and a guaranteed delivery, all backed up with an industry leading 15-year warranty on every enclosure. Put DDB's substantial stock to work for you today. Contact our professional staff to assist you with your made-to-order solution.



Features

0.125" Aluminum Construction

Stainless Steel External Hardware/Hinge

3 Point Lock System

Heavy Duty Out-Door Construction

Front and Rear Access

Custom Colors Available

Cream Powder-Coat in Stock

Flexible and Scalable

15 Year Warranty

Quick Shipping

Application Types

Telecommunications
Wireless/Broadband
Fiber Optics
Back Haul
Small Cell/DAS
Public Safety
Utility
Base Station
Military
Trailer-Based Communications
Wi-Fi
LTEE/4G/5G



Industry Standards:

NEMA 3R as shown

NEMA 4 and 4X configurable (unlisted to environmental rating)

WOD Series Listed to UL 50/50E Type 4 Available

ETL listed to UL Standard 60950-1/CSA 22.2C

Weight and Dimensions

Approximate Exterior Enclosure Dimensions:

63"H x 32"W x 30"D

Shipping Dimensions:

32”W x 42”L - Palletized

Approximate Shipping Weight:

211 lbs.

2301 S. HWY 77 Pauls Valley, OK 73075
T: (800) 753-8459 – F: (877) 220-7236
sales@ddbunlimited.com www.ddbunlimited.com

An ISO 9001 Certified company

WOD Series

WOD-62DXC

Made in America

Believing in American Craftsmanship



Features

1. Solar Shield (Alumishield)
2. 19” and 23” Reversable Racking Rails
3. Rear Access Door
4. Stainless Steel Door Hinge
5. 3 Point Locking System
6. Powder-Coat Cream
7. Reusable Vent Filters

2301 S. HWY 77 Pauls Valley, OK 73075
T: (800) 753-8459 – F: (877) 220-7236
sales@ddbunlimited.com www.ddbunlimited.com

WEB DRAWING (NOT FOR FABRICATION)

REVISIONS		
REV.	DESCRIPTION	DATE
A	Initial Web Drawing per DR-00134	6/10/2013
B	revise to incorporate new components and new drawing template pdr DR-00930	5/15/2014
C	UPDATED TO 2019 FORMAT	5/1/2019
D	UPDATED DRAWING WITH DOOR RODS WITH ROLLERS PER DR-02271	6/5/2020

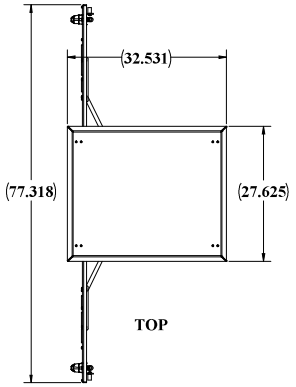

TOP

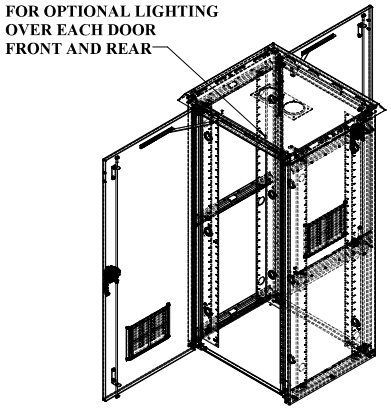

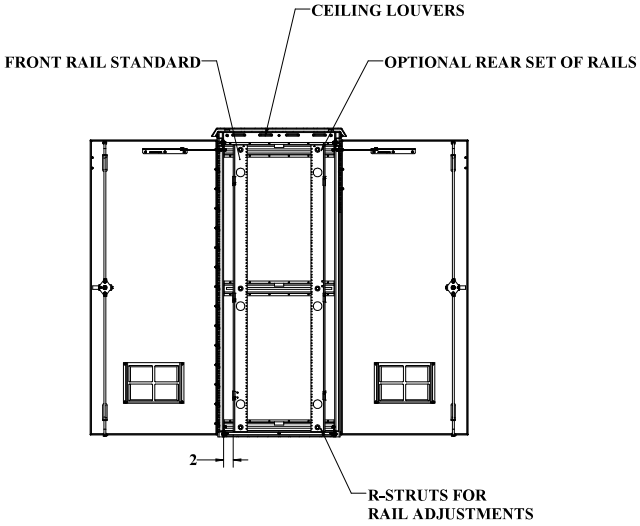

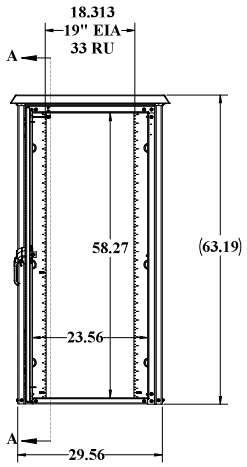

FRONT

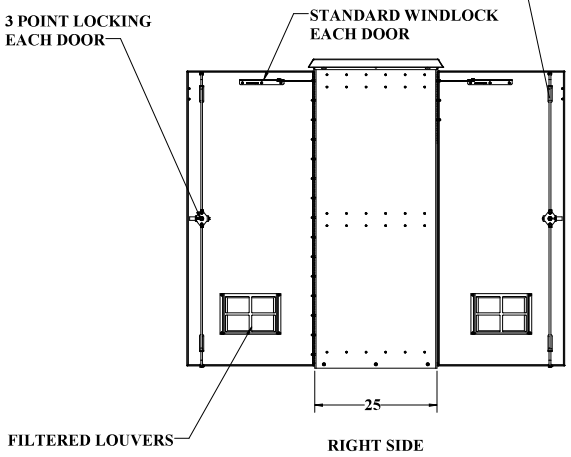

RIGHT SIDE

WEB DRAWING (NOT FOR FABRICATION)

UNLESS OTHERWISE SPECIFIED:		NAME	DATE	*DDB Unlimited Inc.*			
DIMENSIONS ARE IN INCHES	Modeled by:	DDB	5/15/2014	WOD-XXXX			
ANGULAR: MACH ± BEND ± TWO PLACE DECIMAL ± THREE PLACE DECIMAL ±	Drawn by:	aerose	06/12/20	WOD, 62"H, DX			
ALL EDGES BREAK ALL MATERIAL FINISH BREAK	Sales.Rep.	Bryan C	6/25/2013	SIZE	Cage Code:	DWG. NO.:	REV
MATERIAL: 5052-H32-ASTM-B209-04	Q.A. Appr.	troy	06/25/20	D	3S5Y5	00721	D
PAINT:	Prod.Mgr.	ClarkK	06/25/20				
DO NOT SCALE DRAWING	Control Number:			SCALE: 1:12	WEIGHT: 185 lbs.		SHEET 1 OF 3

DDB FORM 7.1-2 REV.F 05/02/19

UNCLASSIFIED PUBLIC

File Location: (DDB)[PDM Vault]
C:\DDB\drawing requests\customers\ddb web dwg\wod family web\d=00721 (wod-62d web)\

WEB DRAWING (NOT FOR FABRICATION)

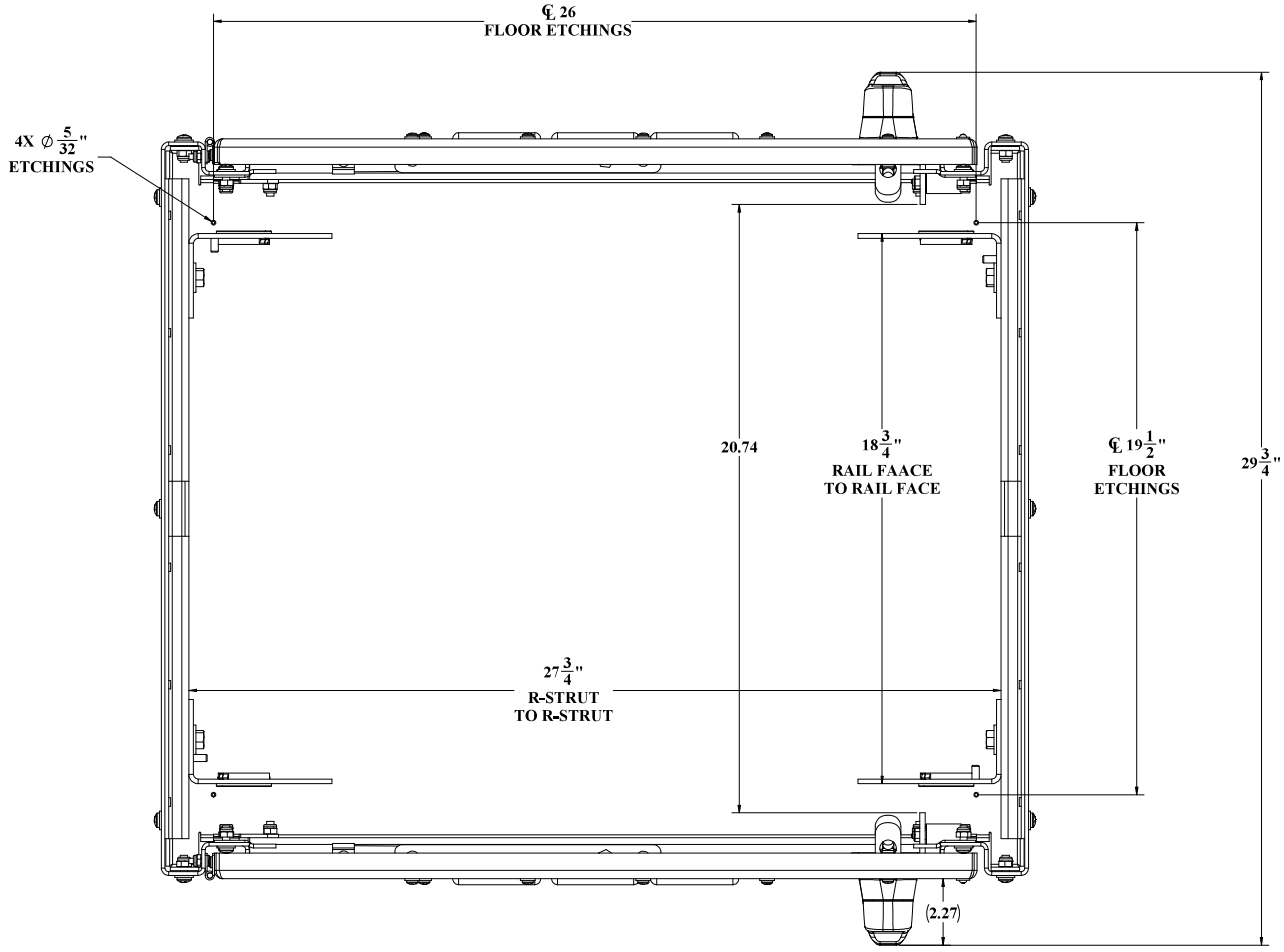

TOP VIEW
CEILING AND ALUMASHIELD NOT SHOWN

WEB DRAWING (NOT FOR FABRICATION)

UNLESS OTHERWISE SPECIFIED:	DDB Unlimited Inc.		
DIMENSIONS ARE IN INCHES ANGULAR: ±1° FRACTIONAL/NO DECIMAL: ±0.1250 TWO PLACE DECIMAL: ±0.0500 THREE PLACE DECIMAL: ±0.0100 ALL HOLES ±0.0050	DX Closed Enclosure, Family, WOD DX Closed		
	SIZE: D	Cage Code: 385Y5	DWG. NO.: 00721 REV: D
MATERIAL: 5052-H32-.125-.250-.500	SCALE: 1:12	WEIGHT:	SHEET 2 OF 3
PAINT: DO NOT SCALE DRAWING			

DDB FORM 7.1-7 REV.K 08/02/17

UNCLASSIFIED PUBLIC
THE INFORMATION CONTAINED IN THIS DRAWING IS THE SOLE PROPERTY OF DDB Unlimited, INC. ANY
REPRODUCTION IN PART OR AS A WHOLE WITHOUT THE WRITTEN PERMISSION OF DDB Unlimited, INC. IS PROHIBITED.

File Location: (DDB)(EPDM Vault)
C:\DDB\drawing requests\customers\ddb web dwg\wod family web\dl-00721 (wod-62dx

WEB DRAWING (NOT FOR FABRICATION)

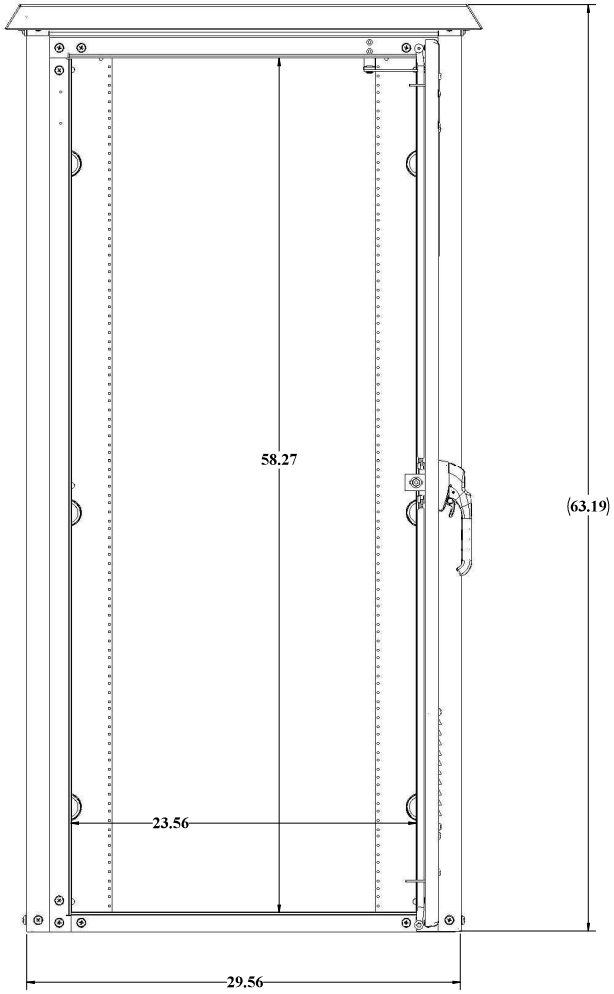

BACK VIEW
GASKET NOT SHOWN

WEB DRAWING (NOT FOR FABRICATION)

UNLESS OTHERWISE SPECIFIED:	DDB Unlimited Inc.		
DIMENSIONS ARE IN INCHES ANGULAR: ±1° FRACTIONAL: ±0.125 TWO PLACE DECIMAL: ±.010 TWO PLACE DECIMAL: ±.0050 THREE PLACE DECIMAL: ±.0030 ALL EDGES #150SQ	WOD-62DX WOD, 62"H, DX		
	SIZE: D	Cage Code: 385Y5	DWG. NO.: 00721	REV: D
MATERIAL: 5052-H32-.125-.250-.500-.750	SCALE: 1:12	WEIGHT:	SHEET 3 OF 3
PAINT: DIAMOND VOGEL HIGH GLOSS ELECTROSTATIC	DO NOT SCALE DRAWING		

DDB FORM 7.1-REV.K 08/02/17

UNCLASSIFIED PUBLIC
THE INFORMATION CONTAINED IN THIS DRAWING IS THE SOLE PROPERTY OF DDB Unlimited, INC. ANY
REPRODUCTION IN PART OR AS A WHOLE WITHOUT THE WRITTEN PERMISSION OF DDB Unlimited, INC. IS PROHIBITED.

File Location: (DDB)(EPDM Vault)
C:\DDB\drawing requests\customers\ddb web dwg\wod family web\dl-00721 (wod-62dx

An ISO 9001 Certified company

WOD Series

WOD-62DDC

Made in America

Believing in American Craftsmanship

Why Choose the WOD Series?

The WOD series of enclosures are the ultimate choice for your outdoor racking requirements. Being made of our own rugged Alumiflex®, you'll find it noticeably lighter than steel, yet strong enough to rack even the heaviest equipment. When choosing the WOD series, you have handpicked the highest value in American construction. The WOD-62DDC includes the standard features you have come to expect with DDB, incorporating the versatile strut system for adjustable racking, the security of a 3-point locking system and our patented Alumishield® solar cap to manage heat loads. For those who need more than just our standard enclosure, DDB can also make a truly customized solution with our many available options including HVAC, providing a climate-controlled environment for any electronic equipment, electrical load panels and cable entry solutions to name a few. All of this comes together to create an enclosure able to meet all of the unique needs your customers have been seeking. DDB offers a state-of-the-art design, a competitive price, benchmark lead times and a guaranteed delivery, all backed up with an industry leading 15-year warranty on every enclosure. Put DDB's substantial stock to work for you today. Contact our professional staff to assist you with your made-to-order solution.



Features

0.125" Aluminum Construction

Stainless Steel External Hardware/Hinge

3 Point Lock System

Heavy Duty Out-Door Construction

Front and Rear Access

Custom Colors Available

Cream Powder-Coat in Stock

Flexible and Scalable

15 Year Warranty

Quick Shipping

Application Types

Telecommunications
Wireless/Broadband
Fiber Optics
Back Haul
Small Cell/DAS
Public Safety
Utility
Base Station
Military
Trailer-Based Communications
Wi-Fi
LTEE/4G/5G



Industry Standards:

NEMA 3R as shown

NEMA 4 and 4X configurable (unlisted to environmental rating)

WOD Series Listed to UL 50/50E Type 4 Available

ETL listed to UL Standard 60950-1/CSA 22.2C

Weight and Dimensions

Approximate Exterior Enclosure Dimensions:

63"H x 32"W x 39"D

Shipping Dimensions:

42"W x 42"L - Palletized

Approximate Shipping Weight:

254 lbs.

2301 S. HWY 77 Pauls Valley, OK 73075
T: (800) 753-8459 – F: (877) 220-7236
sales@ddbunlimited.com www.ddbunlimited.com

An ISO 9001 Certified company

WOD Series

WOD-62DDC

Made in America

Believing in American Craftsmanship



Features

1. Solar Shield (Alumishield)
2. Front and Rear 19” and 23” Reversable Racking Rails
3. Rear Access Door
4. Stainless Steel Door Hinge
5. 3 Point Locking System
6. Powder-Coat Cream
7. Reusable Vent Filters

2301 S. HWY 77 Pauls Valley, OK 73075
T: (800) 753-8459 – F: (877) 220-7236
sales@ddbunlimited.com www.ddbunlimited.com

WEB DRAWING (NOT FOR FABRICATION)

REVISIONS		
REV.	DESCRIPTION	DATE
A	Initial Web Drawing per DR-00134	6/10/2013
B	revise to incorporate new components and new drawing template pdr DR-00931	5/15/2014
C	UPDATED TO 2019 FORMAT	5/1/2019
D	UPDATED DRAWING WITH DOOR RODS WITH ROLLERS PER DR-02275	6/12/2020

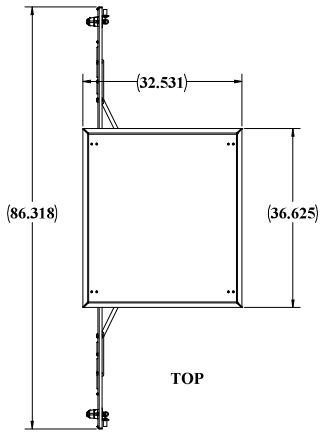

TOP

STANDOFFS ARE STANDARD FOR OPTIONAL LIGHTING OVER EACH DOOR FRONT AND REAR

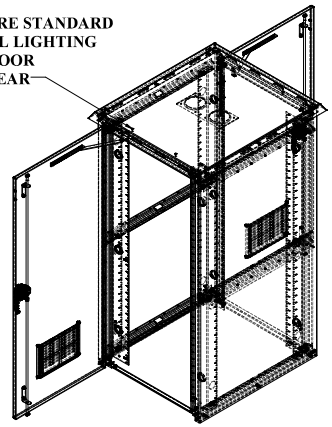

FRONT AND REAR RAILS STANDARD ON DD

CEILING LOUVERS

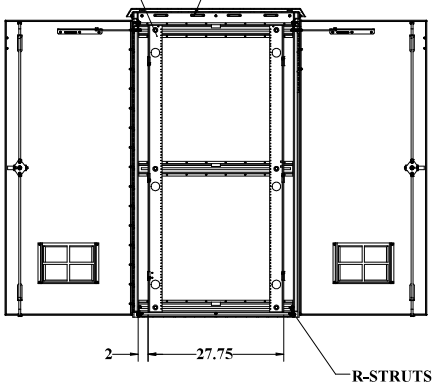

R-STRUTS FOR RAIL ADJUSTMENTS

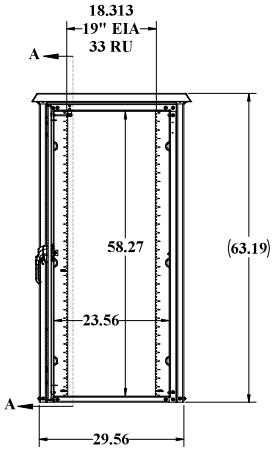

FRONT

STANDARD WINDLOCK EACH DOOR

DOOR RODS WITH ROLLERS

3 POINT LOCKING FOR EACH DOOR

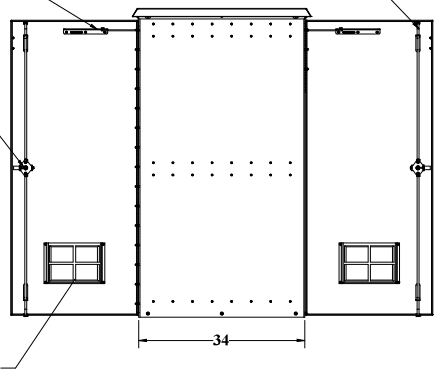

FILTERED VENTS

RIGHT SIDE

WEB DRAWING (NOT FOR FABRICATION)

UNLESS OTHERWISE SPECIFIED:		NAME	DATE	DDB Unlimited Inc.			
DIMENSIONS ARE IN INCHES	Modeled by:	DDB	5/15/2014	WOD-XXXX			
ANGULAR ±1°	Drawn by:	aerose	06/16/20	WOD, 62"H, DD			
DECIMALS ONE PLACE DECIMAL ± 0.06	Sales.Rep.	Bryan C	6/25/2013				
TWO PLACE DECIMAL ± 0.03	Q.A. Appr.	troy	06/25/20	SIZE	Cage Code:	DWG. NO.:	REV
THREE PLACE DECIMAL ± 0.010	Prod.Mgr.	ClarkK	06/25/20	D	3S5Y5	00722	D
ALL EDGES @ 125 MATERIAL: FINISH:							
MATERIAL: 5052-H32-ASTM-B209-04							
PAINT: BAKED POLYESTER POWDER COAT							
DO NOT SCALE DRAWING	Control Number:			SCALE: 1:12	WEIGHT: 210 lbs.		SHEET 1 OF 3

UNCLASSIFIED PUBLIC

WEB DRAWING (NOT FOR FABRICATION)

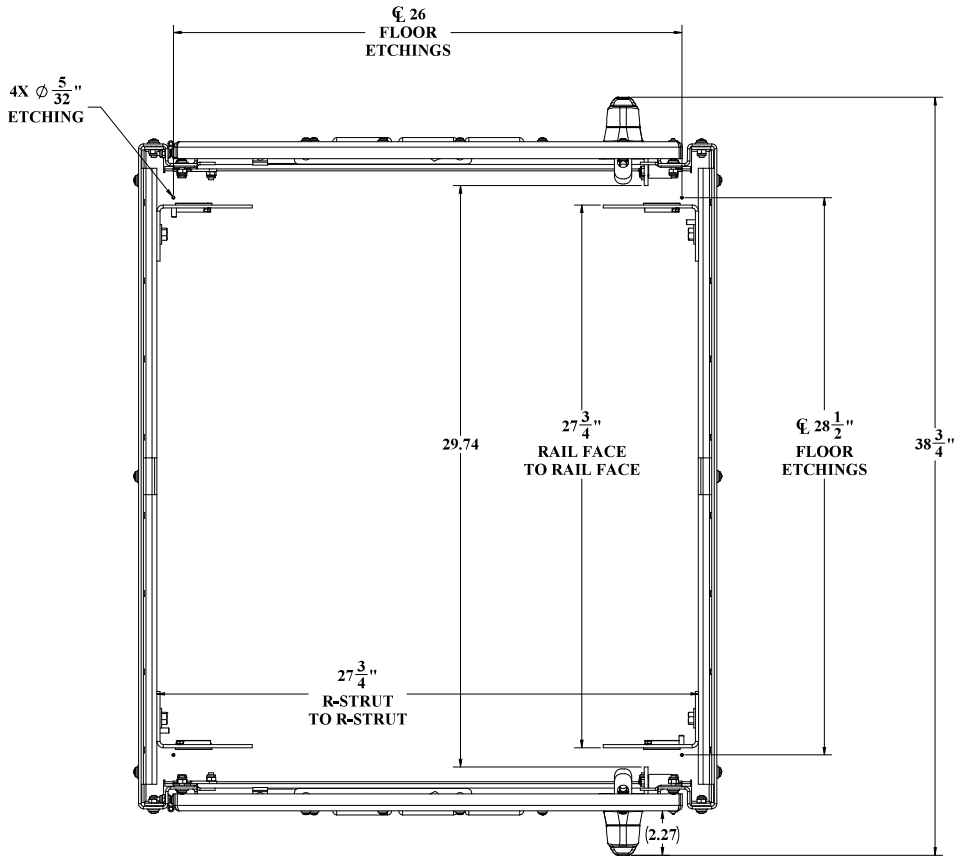

TOP VIEW
CEILING AND ALUMASHIELD NOT SHOWN

WEB DRAWING (NOT FOR FABRICATION)

UNLESS OTHERWISE SPECIFIED:	*DDB Unlimited Inc.*		
DIMENSIONS ARE IN INCHES ANGULAR: ±1° FRACTIONAL/NO DECIMAL: ±0.1250 TWO PLACE DECIMAL: ±0.0500 THREE PLACE DECIMAL: ±0.0100 ALL EDGES #150RMS	DD Closed Enclosure, Family, WOD DD Closed		
MATERIAL: 5052-H32-.125-.250-.500-.750-.1000-5454	SIZE: D	Cage Code: 385Y5	DWG. NO.: 00722 REV: D
PAINT: ALUMINUM SHIELD-BLUE GLOSS TEXTURE-54030	SCALE: 1:12	WEIGHT:	SHEET 2 OF 3
DO NOT SCALE DRAWING			

DDB FORM 7.1-7 REV.K 08/02/17

UNCLASSIFIED PUBLIC
THE INFORMATION CONTAINED IN THIS DRAWING IS THE SOLE PROPERTY OF DDB Unlimited, INC. ANY
REPRODUCTION IN PART OR AS A WHOLE WITHOUT THE WRITTEN PERMISSION OF DDB Unlimited, INC. IS PROHIBITED.

File Location: (DDB)(EPDM Vault)
C:\DDB\drawing requests\customers\ddb web dwg\wod family web\dl-00722 (wod-62dd

WEB DRAWING (NOT FOR FABRICATION)

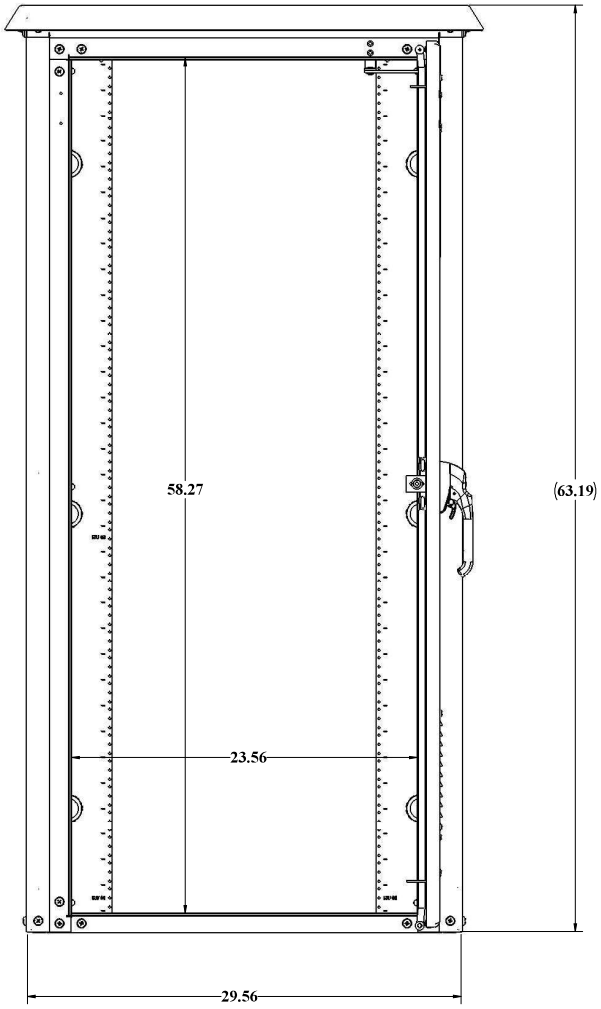

BACK VIEW
GASKET NOT SHOWN

WEB DRAWING (NOT FOR FABRICATION)

UNLESS OTHERWISE SPECIFIED:	*DDB Unlimited Inc.*		
DIMENSIONS ARE IN INCHES ANGULAR: ±1° FRACTIONAL/NO DECIMAL: ±0.1250 TWO PLACE DECIMAL: ±0.0500 THREE PLACE DECIMAL: ±0.0100 ALL EDGES ⌀0.0050	WOD-62DD WOD, 62"H, DDWOD-62DD		
	SIZE: D	Cage Code: 3S5Y5	DWG. NO.: 00722 REV: D
MATERIAL: 5052-H32-.125-.250-.500-.750	SCALE: 1:12	WEIGHT:	SHEET 3 OF 3
PAINT: DURAMAX WOOLSHIRE GLOSS TEXTURE 54920			
DO NOT SCALE DRAWING			

DDB FORM 7.1-REV.K 08/03/17

UNCLASSIFIED PUBLIC
THE INFORMATION CONTAINED IN THIS DRAWING IS THE SOLE PROPERTY OF DDB Unlimited, INC. ANY
REPRODUCTION IN PART OR AS A WHOLE WITHOUT THE WRITTEN PERMISSION OF DDB Unlimited, INC. IS PROHIBITED.

File Location: (DDB)(EPDM Vault)
C:\DDB\drawing requests\customers\ddb web dwg\wod family web\dl-00722 (wod-62dd

DDB UNLIMITED®
An ISO 9001/27001 Certified company

WOD Series
WOD-62DDXC

Made in America
Believing in American Craftsmanship

15 YEAR WARRANTY

Why Choose the WOD Series?

The WOD series of enclosures are the ultimate choice for your outdoor racking requirements. Being made of our own rugged Alumiflex®, you'll find it noticeably lighter than steel, yet strong enough to rack even the heaviest equipment. When choosing the WOD series, you have handpicked the highest value in American construction. The WOD-62DDXC includes the standard features you have come to expect with DDB, incorporating the versatile strut system for adjustable racking, the security of a 3-point locking system and our patented Alumishield® solar cap to manage heat loads. For those who need more than just our standard enclosure, DDB can also make a truly customized solution with our many available options including HVAC, providing a climate-controlled environment for any electronic equipment, electrical load panels and cable entry solutions to name a few. All of this comes together to create an enclosure able to meet all of the unique needs your customers have been seeking. DDB offers a state-of-the-art design, a competitive price, benchmark lead times and a guaranteed delivery, all backed up with an industry leading 15-year warranty on every enclosure. Put DDB's substantial stock to work for you today. Contact our professional staff to assist you with your made-to-order solution.



Application Types

Telecommunications
Wireless/Broadband
Fiber Optics
Back Haul
Base Station
Small Cell/ DAS
Utility
Military
Trailer-Based Communications
Wi-Fi
Flexible and Scalable



Environmental & Safety Ratings:

✓NEMA 3R, 4 or 4X
✓ETL Certified to UL standard 60950-1/CSA 22.2C

Features

15 Year Warranty
0.125" Aluminum Construction
3 Point Lock System
Heavy Duty Out-Door Construction
Front and Rear Access
Standard Lifting Hooks
Stainless Steel External Hardware/Hinge
Cream Powder-Coat, Standard
Quick Shipping

Weight and Dimensions

Approximate Exterior Enclosure Dimensions:
64”H x 33”W x 47”D
Shipping Dimensions:
72”H x 52”W x 42”D- Palletized Approximate
Shipping Weight:
287 lbs.

2301 S. HWY 77 Pauls Valley, OK 73075
T: (405)-665-2876
sales@ddbunlimited.com www.ddbunlimited.com

DDB UNLIMITED®

An ISO 9001/27001 Certified company

WOD Series

WOD-62DDXC

Made in America

Believing in American Craftsmanship

15 YEAR WARRANTY



Features

1. Alumishield
2. Wind Locks
3. 19” and 23" Adjustable Racking Rails
4. 3 Point Locking System
5. Stainless Steel Door Hinge
6. Reusable Filters
7. Heavy Duty 0.160" Doors
8. Powder-Coat Cream
9. Rear Door Access

2301 S. HWY 77 Pauls Valley, OK 73075

T: (405)-665-2876

sales@ddbunlimited.com www.ddbunlimited.com

Scan this code for Climate Control

Scan this code for Accessories

REVISIONS		
REV.	DESCRIPTION	DATE
A	Initial Web Drawing per DR-00134	6/10/2013
B	revise to incorporate new components and new drawing template pdr DR-00932	5/15/2014
C	UPDATED TO 2019 FORMAT	5/2/2019
D	UPDATED DRAWING WITH DOOR RODS WITH ROLLERS PER DR-02276	6/15/2020

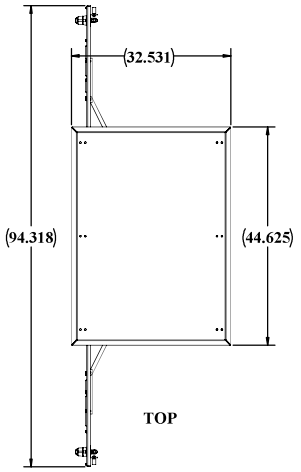

TOP

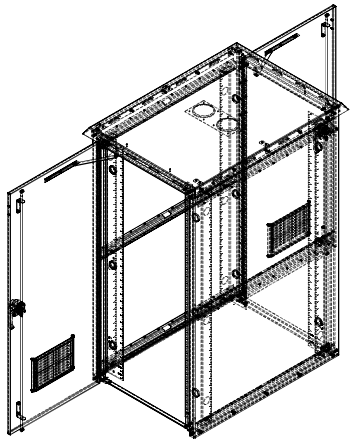

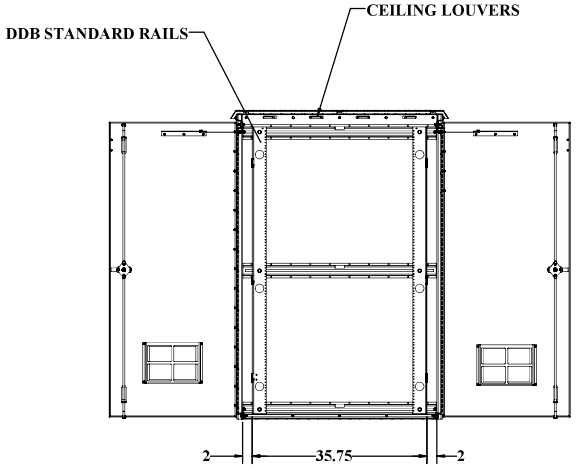

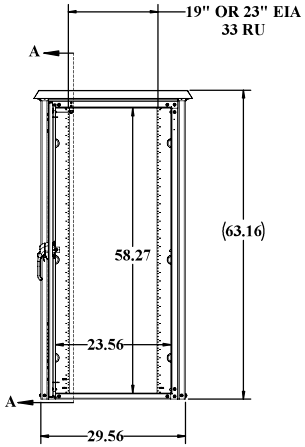

FRONT

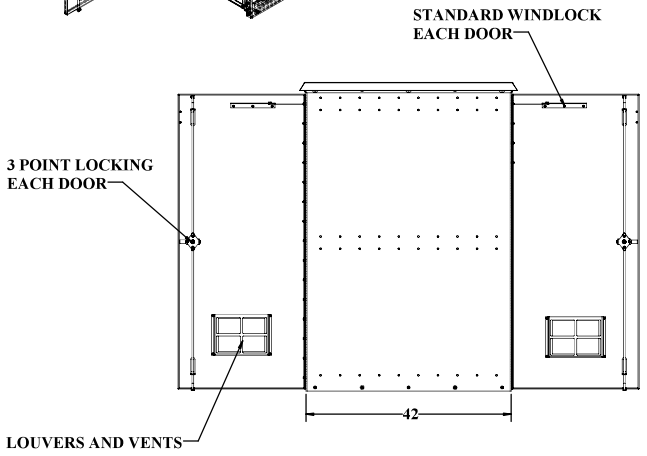

RIGHT SIDE

UNLESS OTHERWISE SPECIFIED:	DDB Unlimited Inc.			
DIMENSIONS ARE IN INCHES ANGULAR: ±1° FRACTIONAL: ±1/64 TWO PLACE DECIMAL: ±.010 THREE PLACE DECIMAL: ±.005 ALL HOLES ±.003	WOD-62DDX WOD, 62"H, DDXWOD-62DDX			
	SIZE	Cage Code:	DWG. NO.:	REV
	D	3S5Y5	00272	D
MATERIAL: 5052-H32-0.125 ASTM B209-04	SCALE: 1:12	WEIGHT: 236 lbs.	SHEET 1 OF 3	
PAINT: DIAMOND VOGEL, BRITE GLOSS TEXTURE 874920				
DO NOT SCALE DRAWING				

DDB FORM 7.1-REV. K 08/03/17

UNCLASSIFIED PUBLIC

File Location: (DDB)(EPDM Vault)
C:\DDB\DR Requests\Customers\DDB WEB DWG\WOD Family WEB\DR-00723 (WOD-62DDX

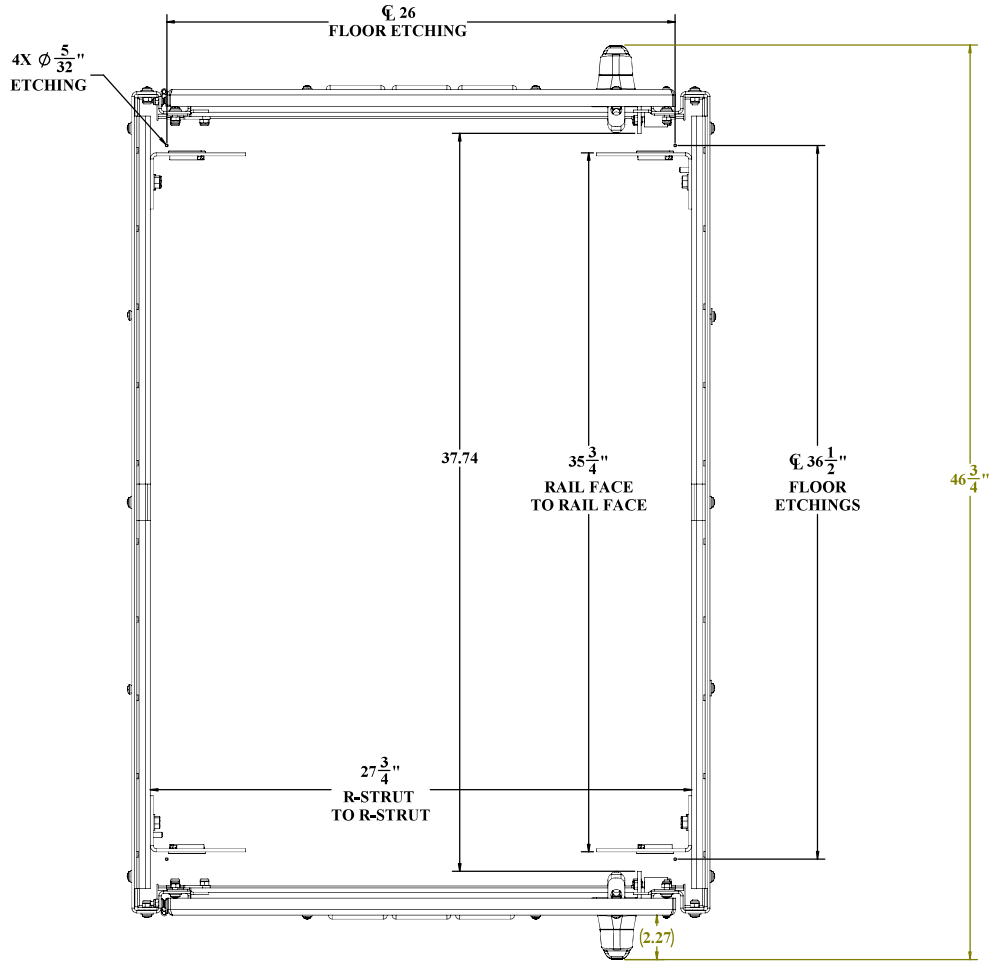

TOP VIEW
CEILNG AND ALUMASHIELD NOT SHOWN

UNLESS OTHERWISE SPECIFIED:	DDB Unlimited Inc.		
DIMENSIONS ARE IN INCHES ANGULAR: FRACTIONAL: NO DECIMAL: TWO PLACE DECIMAL: THREE PLACE DECIMAL: ALL HOLES ⌀	DDX Closed Enclosure, Family, WODDDX Closed		
	SIZE: D	Cage Code: 385Y5	DWG. NO.: 00272	REV: D
MATERIAL: 5052-H32-0.125 ASTM B209-04	SCALE: 1:12	WEIGHT: 147 lbs.	SHEET 2 OF 3
PAINT: DIAMOND VOGEL, BEIGE GLOSS TEXTURE 874920			
DO NOT SCALE DRAWING			

DDB FORM 7.1-REV.K 08/03/17

UNCLASSIFIED PUBLIC

File Location: (DDB)(EPDM Vault)
C:\DDB\DR Requests\Customers\DDB WEB DWG\WOD Family WEB\DR-00723 (WOD-62DDX

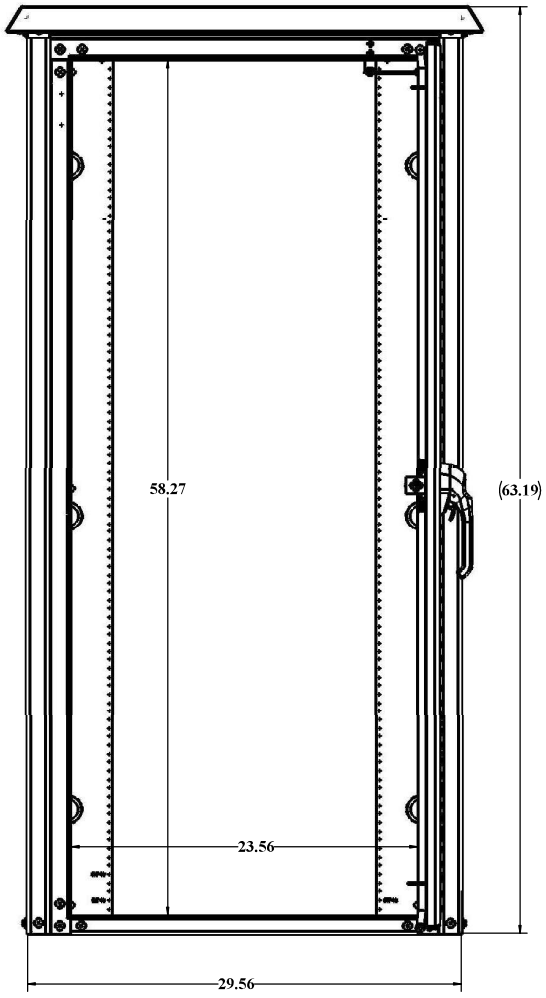

BACK VIEW
GASKET NOT SHOWN

UNLESS OTHERWISE SPECIFIED:	DDB Unlimited Inc.		
DIMENSIONS ARE IN INCHES ANGULAR: FRACTIONAL: NO DECIMAL: TWO PLACE DECIMAL: THREE PLACE DECIMAL: ALL HOLES ⌀	WOD-62DDX WOD, 62"H, DDXWOD-62DDX		
	SIZE: D	Cage Code: 385Y5	DWG. NO.: 00272	REV: D
MATERIAL: 16GA HRS, 12 GA ASTM B209-04	SCALE: 1:12	WEIGHT: 236 lbs.	SHEET 3 OF 3
PAINT: DIAMOND VOGEL, BRICE GLOSS TEXTURE 874920			
DO NOT SCALE DRAWING			

TDDB-FORM-7.1-REV.K 08/03/17

UNCLASSIFIED PUBLIC

File Location: (DDB)(EPDM Vault)
C:\DDB\DR Requests\Customers\DDB WEB DWG\WOD Family WEB\DR-00723 (WOD-62DDX

An ISO 9001/27001 Certified company

WOD Series

WOD-78DXC

Made in America

Believing in American Craftsmanship

15 YEAR WARRANTY

Why Choose the WOD Series?

The WOD series of enclosures are the ultimate choice for your outdoor racking requirements. Being made of our own rugged Alumiflex®, you'll find it noticeably lighter than steel, yet strong enough to rack even the heaviest equipment. When choosing the WOD series, you have handpicked the highest value in American construction. The WOD-78DXC includes the standard features you have come to expect with DDB, incorporating the versatile strut system for adjustable racking, the security of a 3-point locking system and our patented Alumishield® solar cap to manage heat loads. For those who need more than just our standard enclosure, DDB can also make a truly customized solution with our many available options including HVAC, providing a climate-controlled environment for any electronic equipment, electrical load panels and cable entry solutions to name a few. All of this comes together to create an enclosure able to meet all of the unique needs your customers have been seeking. DDB offers a state-of-the-art design, a competitive price, benchmark lead times and a guaranteed delivery, all backed up with an industry leading 15-year warranty on every enclosure. Put DDB's substantial stock to work for you today. Contact our professional staff to assist you with your made-to-order solution.



Features

15 Year Warranty

0.125" Aluminum Construction

3 Point Lock System

Heavy Duty Out-Door Construction

Front and Rear Access

Standard Lifting Hooks

Stainless Steel External Hardware/Hinge

Cream Powder-Coat, Standard

Quick Shipping

Application Types

Telecommunications
Wireless/Broadband
Fiber Optics
Back Haul
Base Station
Small Cell/DAS
Utility
Military
Trailer-Based Communications
Wi-Fi
Flexible and Scalable



Environmental & Safety Ratings:

✓ NEMA 3R, 4 or 4X

✓ETL Certified to UL standard 60950-1/CSA 22.2C

Weight and Dimensions

Approximate Exterior Enclosure Dimensions:

79”H x 33”W x 30”D

Shipping Dimensions:

84”H x 32”W x 42”D- Palletized

Approximate Shipping Weight:

248 lbs.

2301 S. HWY 77 Pauls Valley, OK 73075
T: (405)-665-2876
sales@ddbunlimited.com www.ddbunlimited.com

An ISO 9001/27001 Certified company

WOD Series

WOD-78DXC

Made in America

Believing in American Craftsmanship

15 YEAR WARRANTY



Features

1. Alumishield
2. Wind Locks
3. 19” and 23” Adjustable Racking Rails
4. Rear Door Access
5. 3 Point Locking System
6. Stainless Steel Door Hinge
7. Reusable Vent Filters
8. Heavy Duty 0.160" Doors
9. Powder-Coat Cream

2301 S. HWY 77 Pauls Valley, OK 73075
T: (405)-665-2876
sales@ddbunlimited.com www.ddbunlimited.com

Scan this code for Climate Control

Scan this code for Accessories

REVISIONS		
REV.	DESCRIPTION	DATE
A	Initial Web Drawing per DR-00134	6/10/2013
B	revise to incorporate new components and new drawing template pdr DR-00933	5/15/2014
C	UPDATED TO 2019 FORMAT	5/6/2019
D	UPDATED DRAWING WITH DOOR RODS WITH ROLLERS PER DR-02277	6/16/2020

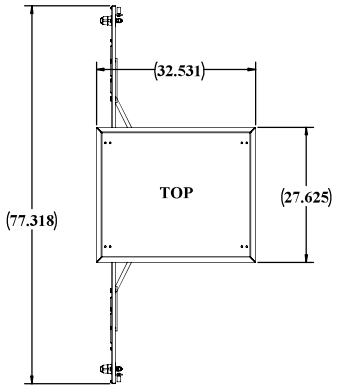

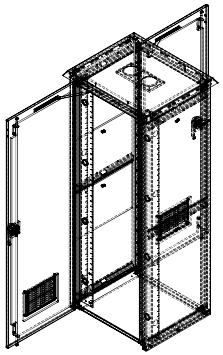

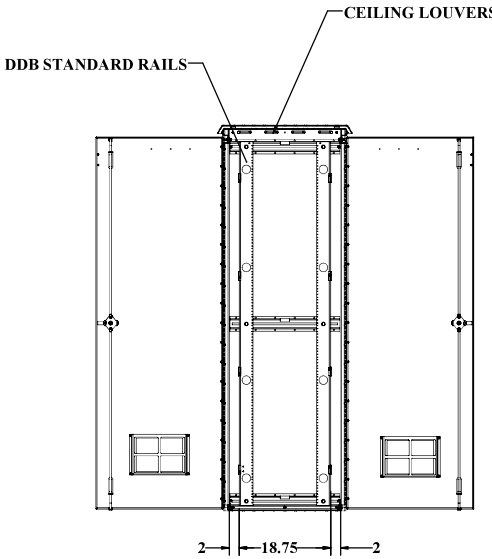

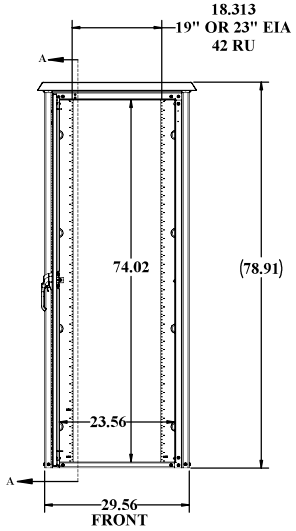

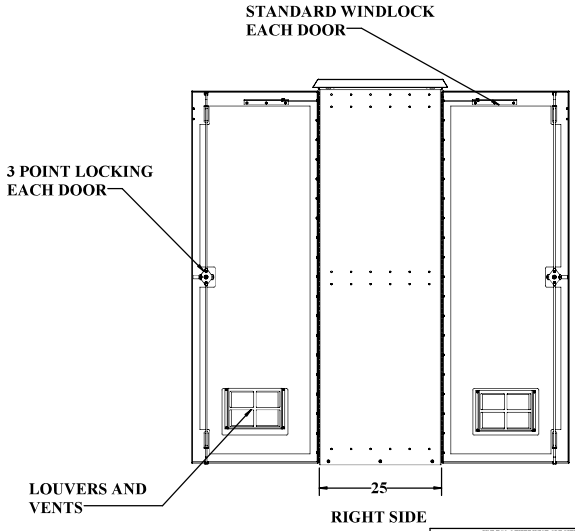

UNLESS OTHERWISE SPECIFIED:
DIMENSIONS ARE IN INCHES
ANGULAR: ±1°
FRACTIONAL: ±1/32
TWO PLACE DECIMAL: ±.010
THREE PLACE DECIMAL: ±.005
ALL EDGES ▲.005 ▲
MATERIAL: 16GA CRS ASTM A109-91
PAINT: DIAMOND VOGEL, BEIGE GLOSS TEXTURE #14920
DO NOT SCALE DRAWING

DDB Unlimited Inc.
WOD-78DX (WEB)
WOD, 78"H, DXWOD-78DX (WEB)

SIZE	Cage Code:	DWG. NO.:	REV
D	3B5Y5	00724	D
SCALE: 1:12	WEIGHT: 216 lbs.	SHEET 1 OF 3	

DDB FORM 7.1-REV.K 08/03/17

UNCLASSIFIED PUBLIC

File Location: (DDB)\EPDM Vault\
C:\DDB\DR Requests\Customers\DDB WEB DWG\WOD Family WEB\DR-00724 (WOD-78DX

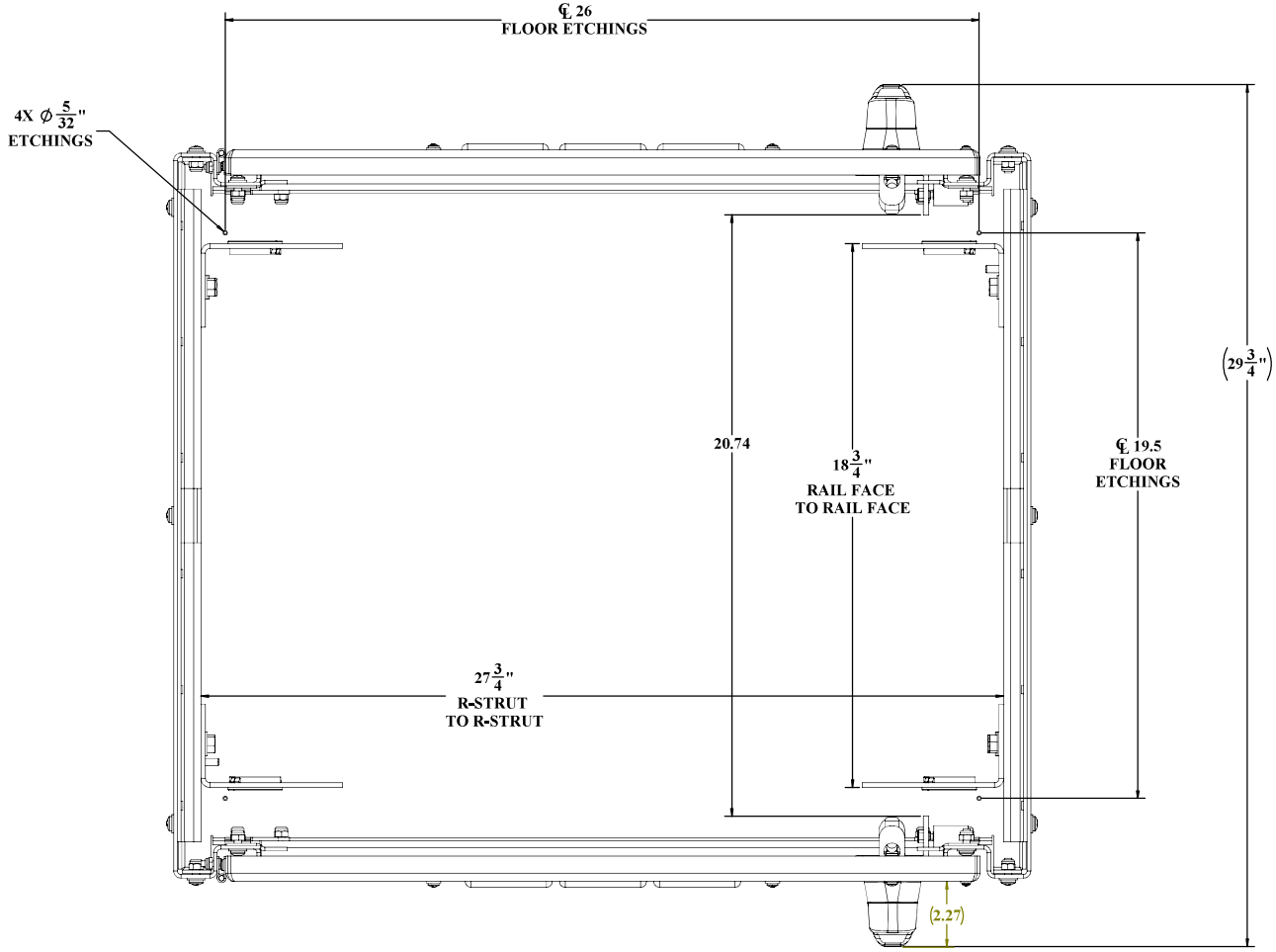

TOP VIEW
CEILING AND ALUMASHIELD NOT SHOWN

UNLESS OTHERWISE SPECIFIED:	DDB Unlimited Inc.			
DIMENSIONS ARE IN INCHES ANGULAR: FRACTIONAL: NO DECIMAL: TWO PLACE DECIMAL: THREE PLACE DECIMAL: MATERIAL - 5052-H32-0.125 ASTM B209-04 PAINT - DIAMOND VOGEL, BEIGE GLOSS TEXTURE 874920	DX Closed Enclosure, Family, WODDX Closed			
	SIZE	Cage Code:	DWG. NO.:	REV
	D	3B5Y5	00724	D
DO NOT SCALE DRAWING	SCALE: 1:12	WEIGHT: 111 lbs.		SHEET 2 OF 3

DDB FORM 7.1-REV.K 08/03/17

UNCLASSIFIED PUBLIC

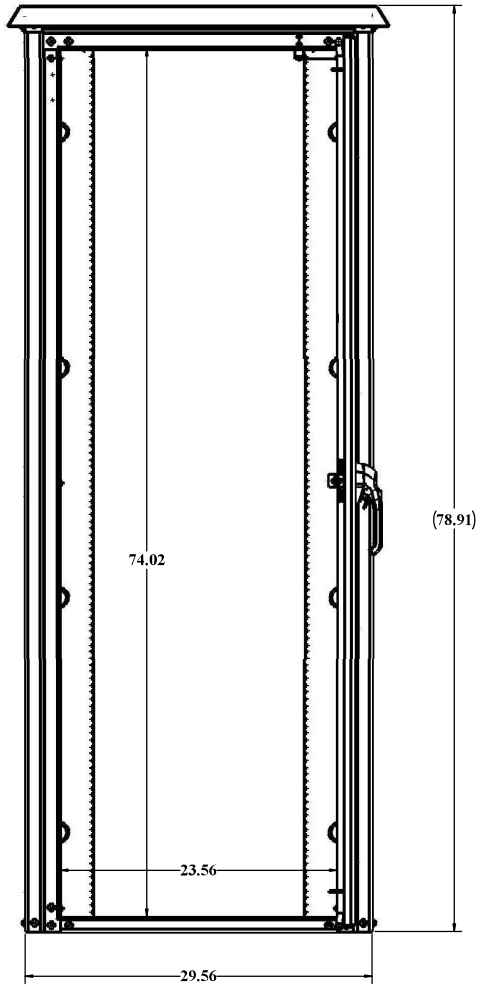

BACK VIEW
GASKET NOT SHOWN

UNLESS OTHERWISE SPECIFIED:	DDB Unlimited Inc.			
DIMENSIONS ARE IN INCHES ANGULAR: ±1° FRACTIONAL: ±1/32 TWO PLACE DECIMAL: ±.010 THREE PLACE DECIMAL: ±.005 ALL HOLES ±.003	WOD-78DX WOD, 78"H, DXWOD-78DX			
	SIZE	Cage Code:	DWG. NO.:	REV
	D	3S5Y5	00724	D
MATERIAL: 5052-H32-0.125 ASTM B209-04	SCALE: 1:12	WEIGHT: 327 lbs.		SHEET 3 OF 3
PAINT: DIAMOND VOGEL, BEIGE GLOSS TEXTURE 874920				
DO NOT SCALE DRAWING				

DDB FORM 7.1-REV K 08/03/17

UNCLASSIFIED PUBLIC

File Location: (DDB)(EPDM Vault)
C:\DDB\DR Requests\Customers\DDB WEB DWG\WOD Family WEB\DR-00724 (WOD-78DX

An ISO 9001 Certified company

WOD Series

WOD-78DDC

Made in America

Believing in American Craftsmanship

15 YEAR WARRANTY

Why Choose WOD the Series?

The WOD series of enclosures are the ultimate choice for your outdoor racking requirements. Being made of our own rugged Alumiflex®, you'll find it noticeably lighter than steel, yet strong enough to rack even the heaviest equipment. When choosing the WOD series, you have handpicked the highest value in American construction. The WOD-78DDC includes the standard features you have come to expect with DDB, incorporating the versatile strut system for adjustable racking, the security of a 3-point locking system and our patented Alumishield® solar cap to manage heat loads. For those who need more than just our standard enclosure, DDB can also make a truly customized solution with our many available options including HVAC, providing a climate-controlled environment for any electronic equipment, electrical load panels and cable entry solutions to name a few. All of this comes together to create an enclosure able to meet all the unique needs your customers have been seeking. DDB offers a state-of-the-art design, a competitive price, benchmark lead times and a guaranteed delivery, all backed up with an industry leading 15-year warranty on every enclosure. Put DDB's substantial stock to work for you today. Contact our professional staff to assist you with your made-to-order solution.



Features

0.125" Aluminum Construction

Stainless Steel External Hardware/Hinge

3 Point Lock System

Heavy Duty Out-Door Construction

Front and Rear Access

Custom Colors Available

Cream & Red Powder-Coat in Stock

Flexible and Scalable

15 Year Warranty

Quick Shipping

Application Types

Telecommunications
Wireless/Broadband
Fiber Optics
Back Haul
Small Cell/DAS
Public Safety
Utility
Base Station
Military
Trailer-Based Communications
Wi-Fi
LTEE/4G/5G



Industry Standards:

NEMA 3R as shown

NEMA 4 and 4X configurable (unlisted to environmental rating)

WOD Series Listed to UL 50/50E Type 4 Available

ETL listed to UL Standard 60950-1/CSA 22.2C

Weight and Dimensions

Approximate Exterior Enclosure Dimensions:

79"H x 32"W x 39"D

Shipping Dimensions:

42”W x 42”D - Palletized

Approximate Shipping Weight:

291 lbs.

2301 S. HWY 77 Pauls Valley, OK 73075
T: (800) 753-8459 – F: (877) 220-7236
sales@ddbunlimited.com www.ddbunlimited.com

DDB UNLIMITED®

An ISO 9001 Certified company

WOD Series

WOD-78DDC

Made in America

Believing in American Craftsmanship

15 YEAR WARRANTY



Features

1. Solar Shield (Alumishield)
2. Front and Rear 19” and 23” Reversable Racking Rails
3. Rear Access Door
4. Stainless Steel Door Hinge
5. 3 Point Locking System
6. Powder-Coat Cream
7. Reusable Vent Filters

2301 S. HWY 77 Pauls Valley, OK 73075
T: (800) 753-8459 – F: (877) 220-7236
sales@ddbunlimited.com www.ddbunlimited.com

WEB DRAWING (NOT FOR FABRICATION)

REVISIONS		
REV.	DESCRIPTION	DATE
A	Initial Web Drawing per DR-00134	6/10/2013
B	revise to incorporate new components and new drawing template pdr DR-00934	5/15/2014
C	UPDATED TO 2019 FORMAT	5/6/2019
D	UPDATED DRAWING WITH DOOR RODS WITH ROLLERS PER DR-02278	6/16/2020

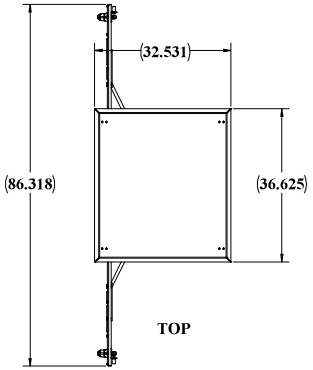

TOP

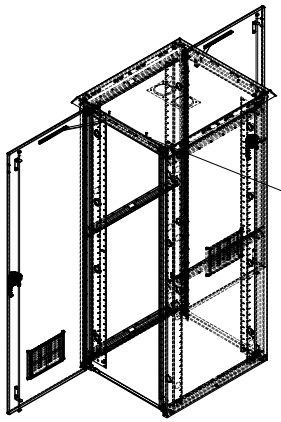

STANDOFFS ARE STANDARD
FOR OPTIONAL LIGHTING
OVER EACH DOOR
FRONT AND REAR

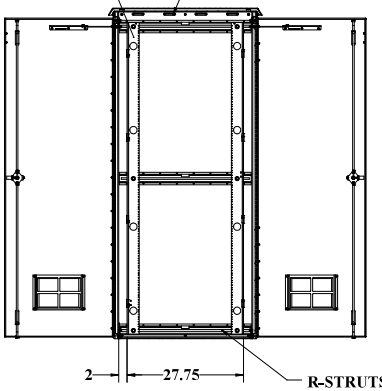

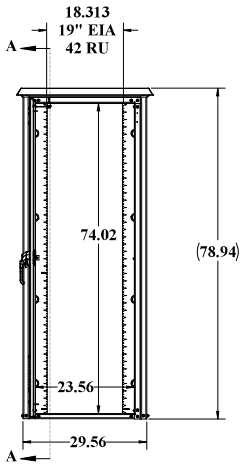

FRONT

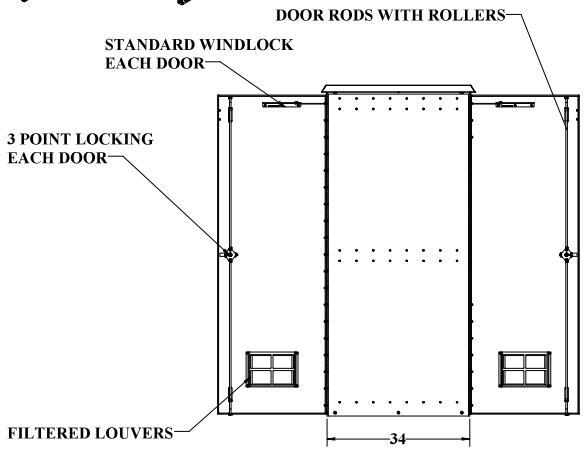

RIGHT SIDE

WEB DRAWING (NOT FOR FABRICATION)

UNLESS OTHERWISE SPECIFIED:		NAME	DATE	DDB Unlimited Inc.			
DIMENSIONS ARE IN INCHES	Modeled by:	DDB	5/15/2014	WOD-XXXX			
ANGULAR: MACH ± BEND ± TWO PLACE DECIMAL ± THREE PLACE DECIMAL ±	Drawn by:	aerose	06/17/20	WOD, 78"H, DD			
ALL HOLES PLATED ± MATERIAL FINISH ±	Sales Rel	Con Cumpio	6/25/2013	SIZE	Cage Code:	DWG. NO.:	REV
	Q.A. Appr.	troy	06/25/20	D	3S5Y5	00725	D
MATERIAL: 5052-H32-ASTM-B209-04	Prod.Mgr.	ClarkK	06/25/20				
PAINT:	Control Number:			SCALE: 1:16	WEIGHT: 249 lbs.		SHEET 1 OF 3
DO NOT SCALE DRAWING							

DDB FORM 7.1-2 REV.F 05/02/19

UNCLASSIFIED PUBLIC

File Location: [DDB]/EPDM Vault/
C:\DDB\drawing requests\customers\ddb web dwg\wod family web\dr-00725 (wod-78dd web)\

WEB DRAWING (NOT FOR FABRICATION)

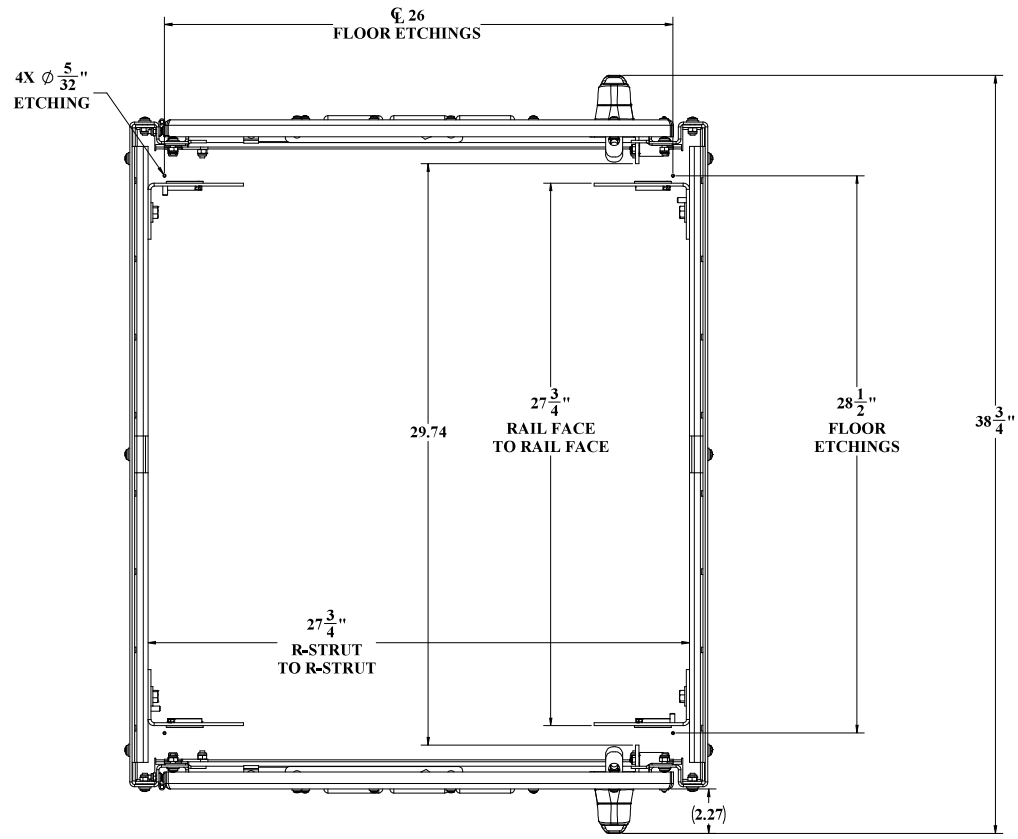

TOP VIEW
CEILING AND ALUMASHIELD NOT SHOWN

WEB DRAWING (NOT FOR FABRICATION)

UNLESS OTHERWISE SPECIFIED:	*DDB Unlimited Inc.*		
DIMENSIONS ARE IN INCHES ANGULAR: ±1° FRACTIONAL/NO DECIMAL: ±0.1250 TWO PLACE DECIMAL: ±0.0500 THREE PLACE DECIMAL: ±0.0100 ALL EDGES ⌀0.0050	DD Closed Enclosure, Family, WOD DD Closed		
	SIZE: D	Cage Code: 385Y5	DWG. NO.: 00725 REV: D
MATERIAL: 5052-H32-.1375-0.289-04			
PAINT: RAMONE VANEL SEMI-GLOSS TEXTURE 154659	SCALE: 1:16	WEIGHT:	SHEET 2 OF 3
DO NOT SCALE DRAWING			

DDB FORM 7.1-REV.K 08/02/17

UNCLASSIFIED PUBLIC
THE INFORMATION CONTAINED IN THIS DRAWING IS THE SOLE PROPERTY OF DDB Unlimited, INC. ANY
REPRODUCTION IN PART OR AS A WHOLE WITHOUT THE WRITTEN PERMISSION OF DDB Unlimited, INC. IS PROHIBITED.

File Location: (DDB)(EPDM Vault)
C:\DDB\drawing requests\customers\ddb web dwg\wod family web\dl-00725 (wod-78dd

WEB DRAWING (NOT FOR FABRICATION)

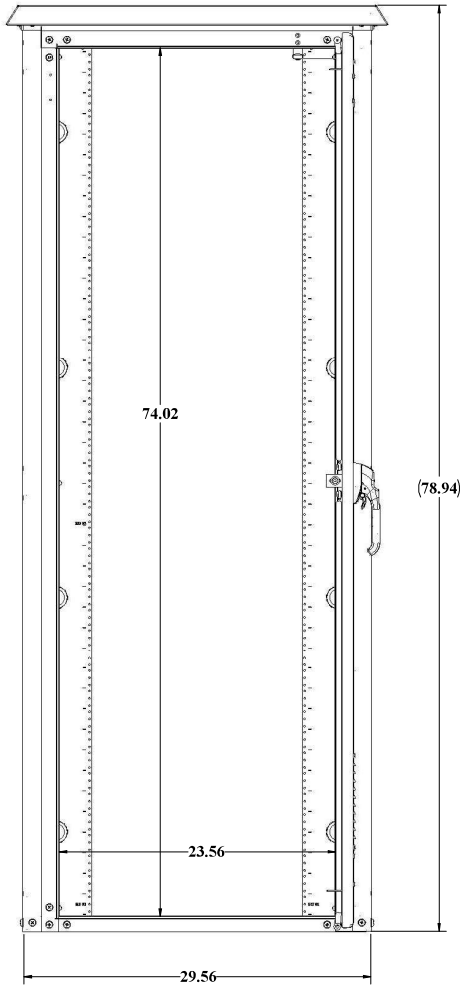

BACK VIEW
GASKET NOT SHOWN

WEB DRAWING (NOT FOR FABRICATION)

UNLESS OTHERWISE SPECIFIED:	*DDB Unlimited Inc.*		
DIMENSIONS ARE IN INCHES ANGULAR: ±1° FRACTIONAL/NO DECIMAL: ±0.125 TWO PLACE DECIMAL: ±0.010 THREE PLACE DECIMAL: ±0.005 ALL EDGES #180SB	WOD-78DD WOD, 78"H, DD WOD-78DD		
	SIZE: D	Cage Code: 385Y5	DWG. NO.: 00725 REV: D
MATERIAL: 5052-H32-.125-.250-.500-.750	SCALE: 1:16	WEIGHT:	SHEET 3 OF 3
PAINT: DIAMOND VOGEL SEMI GLOSS TEXTURE 15-0020	DO NOT SCALE DRAWING		

DDB-FORM-7.1-REV.K 08/03/17

UNCLASSIFIED PUBLIC
THE INFORMATION CONTAINED IN THIS DRAWING IS THE SOLE PROPERTY OF DDB Unlimited, INC. ANY
REPRODUCTION IN PART OR AS A WHOLE WITHOUT THE WRITTEN PERMISSION OF DDB Unlimited, INC. IS PROHIBITED.

File Location: (DDB)(EPDM Vault)
C:\DDB\drawing requests\customers\ddb web dwg\wod family web\dl-00725 (wod-78dd

An ISO 9001 Certified company

WOD Series

WOD-78DDXC

Made in America

Believing in American Craftsmanship

15 YEAR WARRANTY

Why Choose WOD the Series?

The WOD series of enclosures are the ultimate choice for your outdoor racking requirements. Being made of our own rugged Alumiflex®, you'll find it noticeably lighter than steel, yet strong enough to rack even the heaviest equipment. When choosing the WOD series, you have handpicked the highest value in American construction. The WOD-78DDXC includes the standard features you have come to expect with DDB, incorporating the versatile strut system for adjustable racking, the security of a 3-point locking system and our patented Alumishield® solar cap to manage heat loads. For those who need more than just our standard enclosure, DDB can also make a truly customized solution with our many available options including HVAC, providing a climate-controlled environment for any electronic equipment, electrical load panels and cable entry solutions to name a few. All of this comes together to create an enclosure able to meet all of the unique needs your customers have been seeking. DDB offers a state-of-the-art design, a competitive price, benchmark lead times and a guaranteed delivery, all backed up with an industry leading 15-year warranty on every enclosure. Put DDB's substantial stock to work for you today. Contact our professional staff to assist you with your made-to-order solution.



Application Types

Telecommunications
Wireless/Broadband
Fiber Optics
Back Haul
Small Cell/DAS
Public Safety
Utility
Base Station
Military
Trailer-Based Communications
Wi-Fi
LTEE/4G/5G

Industry Standards:

NEMA 3R as shown
NEMA 4 and 4X configurable (unlisted to environmental rating)
WOD Series Listed to UL 50/50E Type 4 Available
ETL listed to UL Standard 60950-1/CSA 22.2C

2301 S. HWY 77 Pauls Valley, OK 73075
T: (800) 753-8459 – F: (877) 220-7236
sales@ddbunlimited.com www.ddbunlimited.com



Features

0.125" Aluminum Construction
Stainless Steel External Hardware/Hinge
3 Point Lock System
Heavy Duty Out-Door Construction
Front and Rear Access
Custom Colors Available
Cream & Red Powder-Coat in Stock
Flexible and Scalable
15 Year Warranty
Quick Shipping

Weight and Dimensions

Approximate Exterior Enclosure Dimensions:
79"H x 32"W x 47"D
Shipping Dimensions:
52”W x 42”D - Palletized
Approximate Shipping Weight:
324 lbs.

An ISO 9001
Certified company

WOD Series

WOD-78DDXC

Made in America

Believing in American Craftsmanship



Features

1. Solar Shield (Alumishield)
2. Front and Rear 19” and 23” Reversable Racking Rails
3. Rear Access Door
4. Wind-Lock Installed on Front & Rear Doors
5. 3 Point Locking System
6. Powder-Coat Cream
7. Reusable Vent Filters

2301 S. HWY 77 Pauls Valley, OK 73075
T: (800) 753-8459 – F: (877) 220-7236
sales@ddbunlimited.com www.ddbunlimited.com

WEB DRAWING (NOT FOR FABRICATION)

REVISIONS		
REV.	DESCRIPTION	DATE
A	Initial Web Drawing per DR-00134	6/10/2013
B	revise to incorporate new components and new drawing template pdr DR-00934	5/15/2014
C	UPDATED TO 2019 FORMAT	5/6/2019
D	UPDATED DRAWING WITH DOOR RODS WITH ROLLERS PER DR-02279	6/17/2020

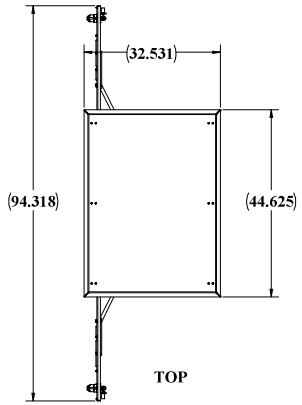

TOP

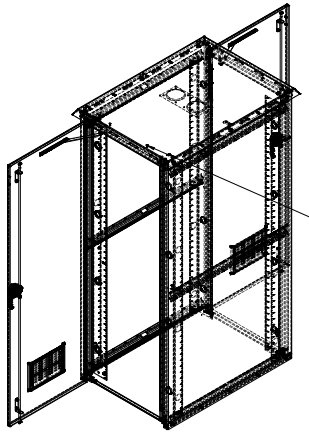

STANDOFFS ARE STANDARD FOR OPTIONAL LIGHTING OVER EACH DOOR FRONT AND REAR

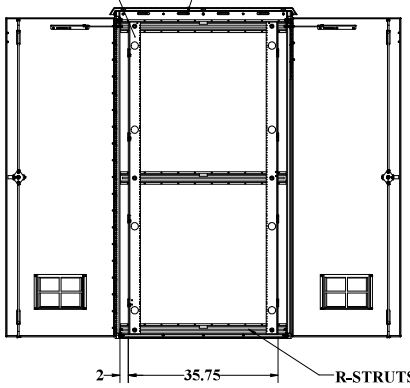

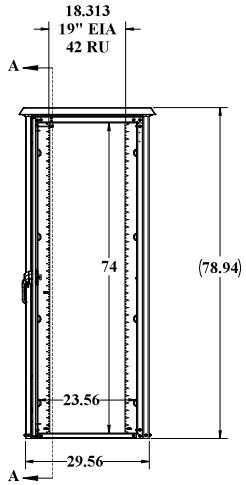

FRONT

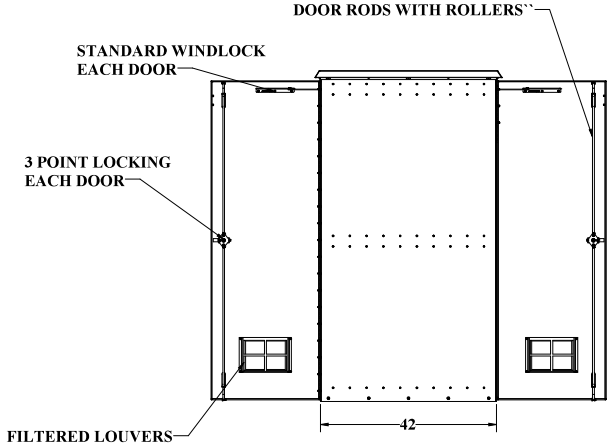

RIGHT SIDE

WEB DRAWING (NOT FOR FABRICATION)

UNLESS OTHERWISE SPECIFIED:		NAME	DATE	DDB Unlimited Inc.			
DIMENSIONS ARE IN INCHES	Modeled by:	DDB	5/15/2014	WOD-XXXX			
ANGULAR ±1°	Drawn by:	aevoe	06/17/20	WOD, 78"H, DDX			
TWO PLACE DECIMAL ±.010	Sales.Rep.	Bryan C	6/25/2013	SIZE	Cage Code:	DWG. NO.:	REV
THREE PLACE DECIMAL ±.005	Q.A. Appr.	Matty	06/19/20	D	3S5Y5	00726	D
ALL EDGES BREAK @ MATERIAL THICKNESS/10 ±.159	Prod.Mgr.	ClarkK	06/19/20				
MATERIAL: 5052-H32-ASTM-B209-04							
PAINT: DIAMOND VOGEL HESS GLOSS TEXTURE 15A070							
DO NOT SCALE DRAWING	Control Number:			SCALE: 1:16	WEIGHT: 274 lbs.		SHEET 1 OF 3

DDB FORM: 7.1-2 REV:F 05/02/19

UNCLASSIFIED PUBLIC

File Location: (DDB)\EPDM Vault\
C:\DDB\Drawing Requests\Customers\DDB WEB DWG\WOD Family WEB\DR-00726 (WOD-78DDX WEB)\

WEB DRAWING (NOT FOR FABRICATION)

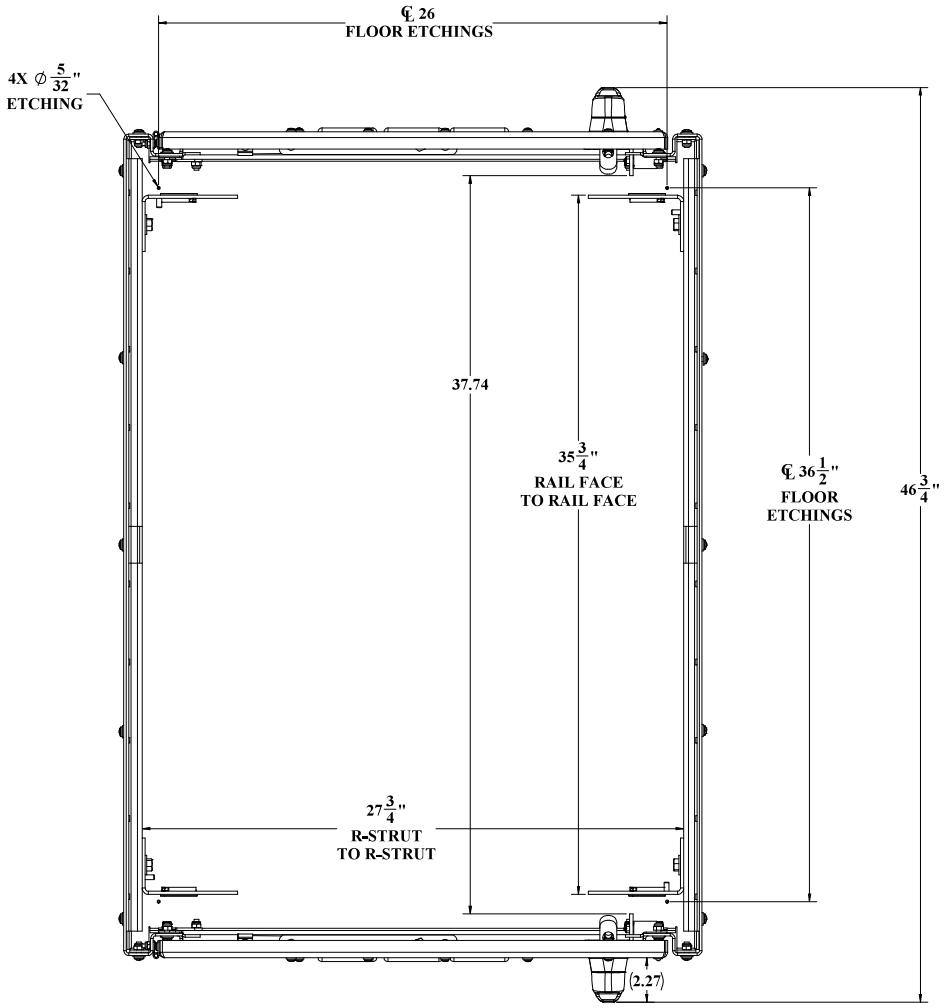

TOP VIEW
CEILING AND ALUMASHIELD NOT SHOWN

WEB DRAWING (NOT FOR FABRICATION)

UNLESS OTHERWISE SPECIFIED: DIMENSIONS ARE IN INCHES. ANGULAR: ±1° FRACTIONAL/NO DECIMAL: ±0.1250 TWO PLACE DECIMAL: ±0.0100 TWO PLACE DECIMAL: ±0.0050 THREE PLACE DECIMAL: ±0.0030 ALL EDGES #150SQ	DDB Unlimited Inc. DDX Closed Enclosure, Family, WOD DDX Closed
SIZE: D	Cage Code: 385Y5
DWG. NO.: 00726	REV: D
MATERIAL: 5052-H32-.125-.250-.500-.750	SCALE: 1:16 WEIGHT:
PAINT: DIAMOND VOGEL BLUE GLOSS TEXTURE 13-6450	SHEET 2 OF 3
DO NOT SCALE DRAWING	

DDB FORM 7.1-REV.K 08/02/17

UNCLASSIFIED PUBLIC
THE INFORMATION CONTAINED IN THIS DRAWING IS THE SOLE PROPERTY OF DDB Unlimited, INC. ANY REPRODUCTION IN PART OR AS A WHOLE WITHOUT THE WRITTEN PERMISSION OF DDB Unlimited, INC. IS PROHIBITED.

File Location: (DDB)(EPDM Vault)
C:\DDB\Drawing Requests\Customers\DDB WEB DWG\WOD Family WEB\DR-00726 (WOD-

WEB DRAWING (NOT FOR FABRICATION)

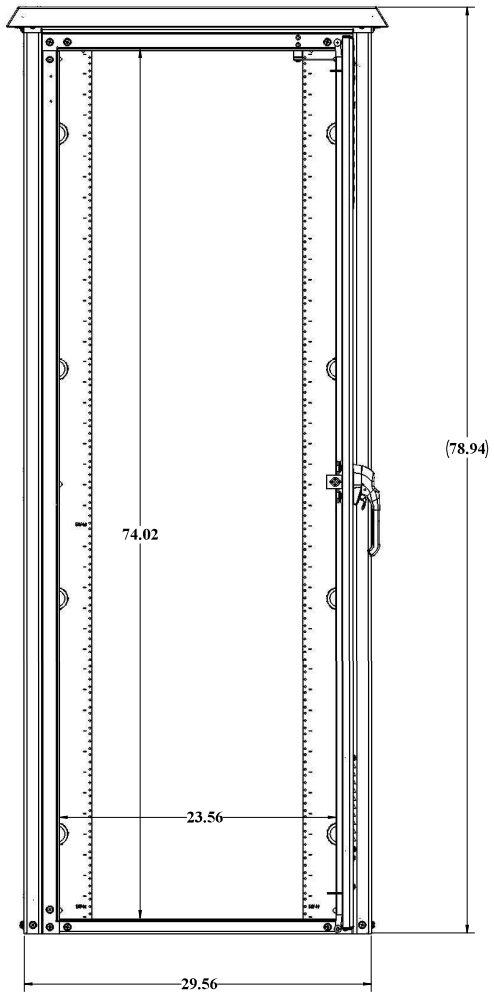

BACK VIEW
GASKET NOT SHOWN

WEB DRAWING (NOT FOR FABRICATION)

UNLESS OTHERWISE SPECIFIED:	*DDB Unlimited Inc.*		
DIMENSIONS ARE IN INCHES ANGULAR: ±1° FRACTIONAL/NO DECIMAL: ±0.1250 TWO PLACE DECIMAL: ±0.0100 THREE PLACE DECIMAL: ±0.0050 ALL EDGES #100RMS	WOD-78DDX WOD, 78"H, DDX		
	SIZE: D	Cage Code: 385Y5	DWG. NO.: 00726 REV: D
MATERIAL: 5052-H32-.125-.250-.500-.750	SCALE: 1:16	WEIGHT:	SHEET 3 OF 3
PAINT: DIAMOND VOGEL BLUE GLOSS TEXTURE 13-0450			
DO NOT SCALE DRAWING			

DDB FORM 7.1-REV.K 08/02/17

UNCLASSIFIED PUBLIC
THE INFORMATION CONTAINED IN THIS DRAWING IS THE SOLE PROPERTY OF DDB Unlimited, INC. ANY
REPRODUCTION IN PART OR AS A WHOLE WITHOUT THE WRITTEN PERMISSION OF DDB Unlimited, INC. IS PROHIBITED.

File Location: (DDB)(EPDM Vault)
C:\DDB\Drawing Requests\Customers\DDB WEB DWG\WOD Family WEB\DR-00726 (WOD-

DDB UNLIMITED®

An ISO 9001 Certified company

2OD Series

2OD-30DXC

Made in America

Believing in American Craftsmanship

15 YEAR WARRANTY

Why Choose the 2OD Series?

When a single bay solution just isn't sufficient, the 2OD series enclosures are ideal. Constructed of our own rugged Alumiflex®, it is noticeably lighter than steel yet strong enough to rack the heaviest equipment. The 2OD-30DXC includes a number of standard features, such as an adjustable racking system with a versatile rail strut system (R-Strut), a 3-point locking system for security, a reversible rack system for 19" and 23" applications, lifting hooks for easy maneuvering into place, wind locks to secure doors safely when they are open, and our patented Alumishield® solar cap for managing heat loads. Furthermore, DDB offers an array of customizable choices, which include climate control (HVAC), electrical load panels, and cable entry solutions. These possibilities combine to produce an enclosure that can be customized to meet the specific needs that your site and clients may require. The 2OD undoubtably closes the gap between single-bay enclosures and larger building "hut" solutions, giving you the flexibility to meet any need in the field without the required stamps or inspections that traditional "huts" do . With an industry-lear-leading 15-year warranty on every enclosure, DDB provides cutting-edge d, competitive pricing, benchmark lead times, and guaranteenteed delivery. Whether you require a custom enclosure or something from substantial stock, our professional staff is here to help you you today.



Features

15 Year Warranty

0.125" Aluminum Construction

3 Point Lock System

Heavy Duty Out-Door Construction

Front and Rear Access

Standard Lifting Hooks

Stainless Steel External Hardware/Hinge

Cream Powder-Coat, Standard

Flexible and Scalable

Quick Shipping

Application Types

Telecommunications
Wireless/Broadband
Fiber Optics
Back Haul
Public Safety
Utility
Base Station
Military
Trailer-Based Communications
Wi-Fi
LTEE/4G/5G

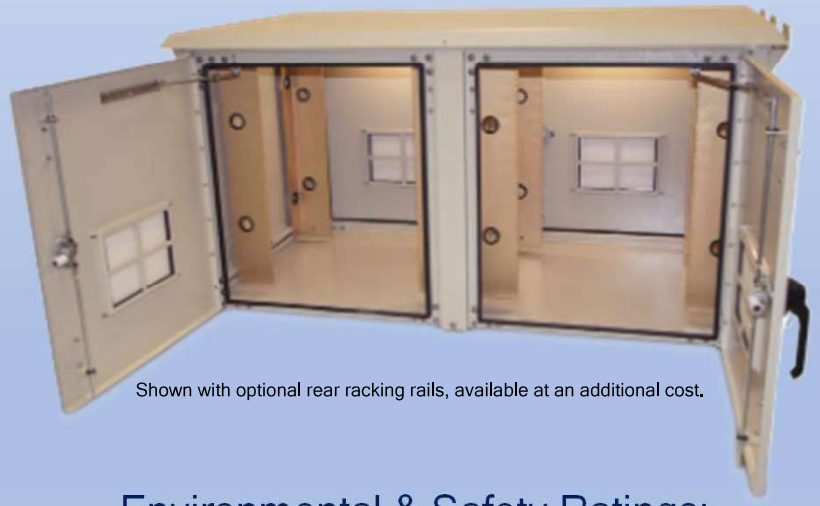

Shown with optional rear racking rails, available at an additional cost.

Environmental & Safety Ratings:

- ✓ NEMA 3R (shown above)
- ✓ NEMA 4 and 4X configurable (not shown)

Weight and Dimensions

Approximate Exterior Enclosure Dimensions:

32”H x 65”W x 30”D

Shipping Dimensions:

54”D x 84”W x 40”H- Palletized

Approximate Shipping Weight:

328 lbs.

2301 S. HWY 77 Pauls Valley, OK 73075
T: (405)-665-2876
sales@ddbunlimited.com www.ddbunlimited.com

An ISO 9001
Certified company

2OD Series

2OD-30DXC

Made in America

Believing in American
Craftsmanship

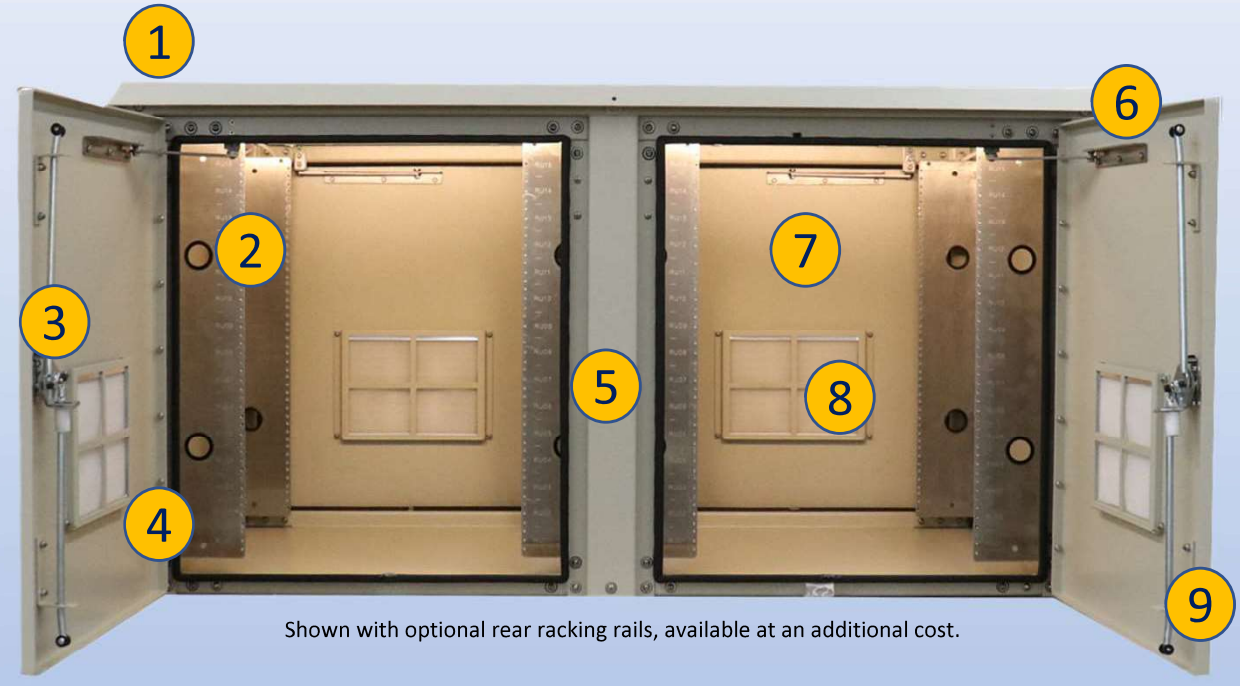

Shown with optional rear racking rails, available at an additional cost.

Features

1. Alumishield
2. 19” and 23” Adjustable Racking Rails
3. 3 Point Locking System
4. Stainless Steel Door Hinge
5. Powder-Coat Cream
6. Wind Locks
7. Reusable Filters
8. Rear Door Access
9. Heavy Duty 0.160" Doors

Scan this code for
Climate Control

Scan this code for
Accessories

2301 S. HWY 77 Pauls Valley, OK 73075
T: (405)-665-2876
sales@ddbunlimited.com www.ddbunlimited.com

WEB DRAWING (NOT FOR FABRICATION

REVISIONS		
REV.	DESCRIPTION	DATE
A	Initial Release per DR-00959	5/28/2014
B	UPDATED TO 2017 WEBSITE FORMAT	8/11/2017
C	UPDATED NEW FORMAT	11/17/2020

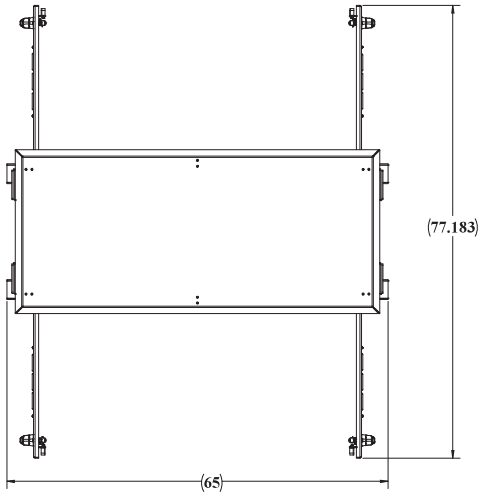

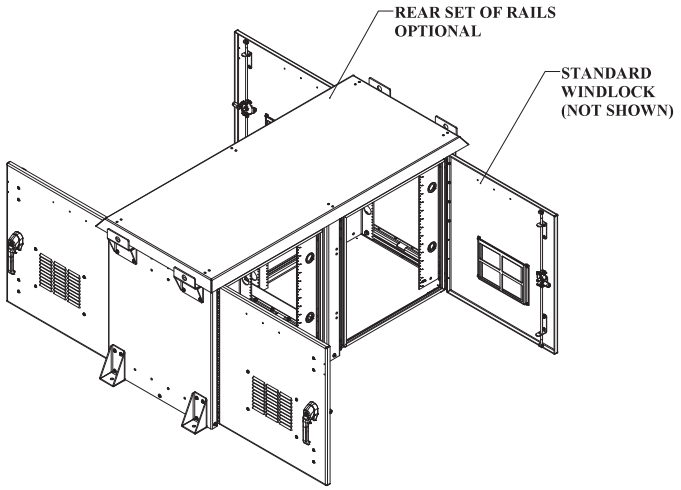

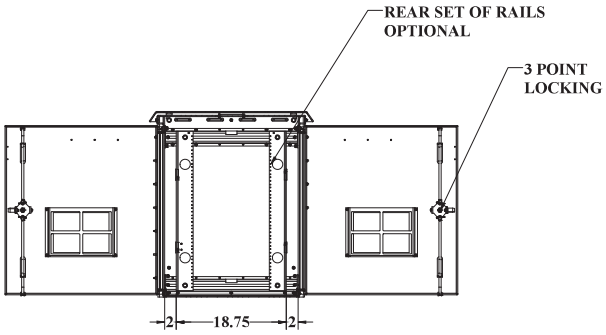

SECTION A-A
SCALE 1 : 10

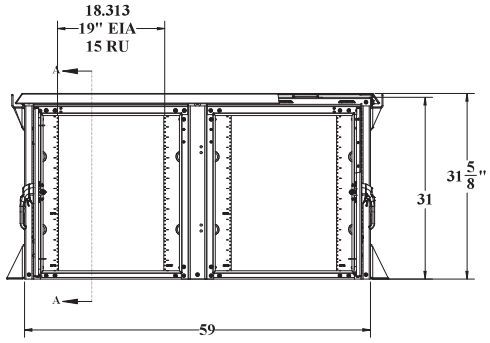

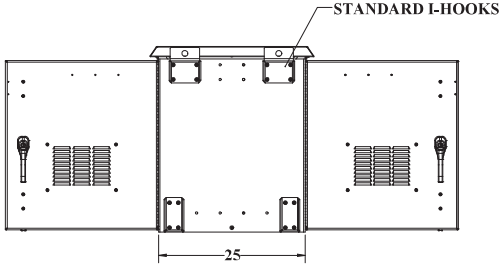

WEB DRAWING (NOT FOR FABRICATION

UNLESS OTHERWISE SPECIFIED:	*DDB Unlimited Inc.*		
DIMENSIONS ARE IN INCHES ANGULAR: ±1° FRACTIONAL/NO DECIMAL: ±0.1250 TWO PLACE DECIMAL: ± 0.0100 THREE PLACE DECIMAL: ± 0.0050 ALL HOLES ±0.0030	2OD-30DX DWG, WEB, 2OD, 30, DX		
	SIZE: D	Cage Code: 385Y5	DWG. NO.: 00959 REV: C
MATERIAL: 5052-H32-0.125 ASTM B209-84	SCALE: 1:8	WEIGHT: 223 lbs.	SHEET 1 OF 3
PAINT: DIAMOND VOGE, BEIGE GLOSS TEXTURE E5-0020			
DO NOT SCALE DRAWING			

UNCLASSIFIED PUBLIC

File Location: (DDB)(EPDM Vault)
C:\DDB\DR Requests\Customers\DDB WEB DWG\2OD Family WEB\DR-00959 (2OD-30DX WEB DWG)\

DDB-DWG-7.1-REV K 08/02/17

WEB DRAWING (NOT FOR FABRICATION)

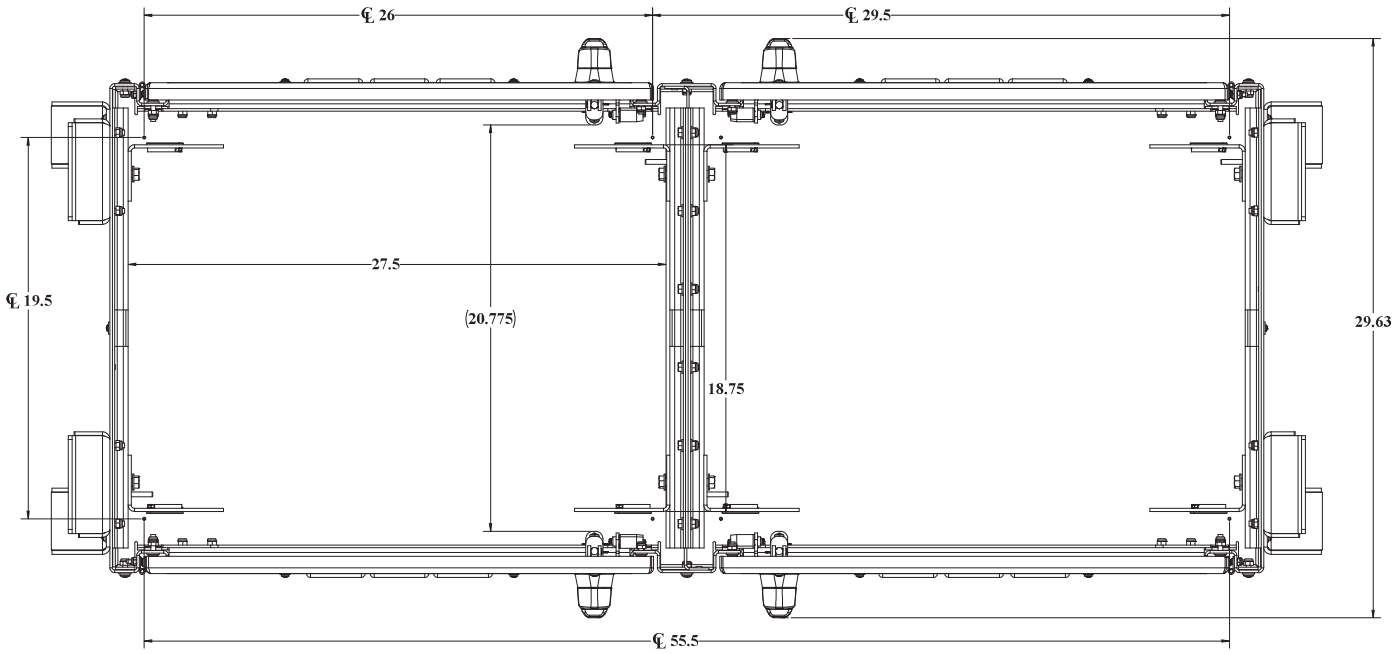

TOP VIEW SOLAR SHIELD AND CEILING NOT SHOWN

WEB DRAWING (NOT FOR FABRICATION)

UNLESS OTHERWISE SPECIFIED:	DDB Unlimited Inc.		
DIMENSIONS ARE IN INCHES ANGULAR: ±1° FRACTIONAL/NO DECIMAL: ±0.125 TWO PLACE DECIMAL: ±0.010 TWO PLACE DECIMAL: ±0.0100 THREE PLACE DECIMAL: ±0.0100 ALL HOLES ø0.0938	20D-30DX (Closed)		
	SIZE: D	Cage Code: 385Y5	DWG. NO.: 00959	REV: C
MATERIAL: 5052-H32-0.127 ASTM B209-04	SCALE: 1:8	WEIGHT: 223 lbs.	SHEET 2 OF 3
PAINT: DIAMOND VOGT, BEIGE GLOSS TEXTURE E5-0020	DO NOT SCALE DRAWING		

DDB FORM 7.1-7 REV.K 08/02/17

UNCLASSIFIED PUBLIC

File Location: (DDB) (EPDM Vault:)
C:\DDB\DR Requests\Customers\DDB WEB DWG\20D Family WEB\DR-00959 (20D-30DX WEB

WEB DRAWING (NOT FOR FABRICATION)

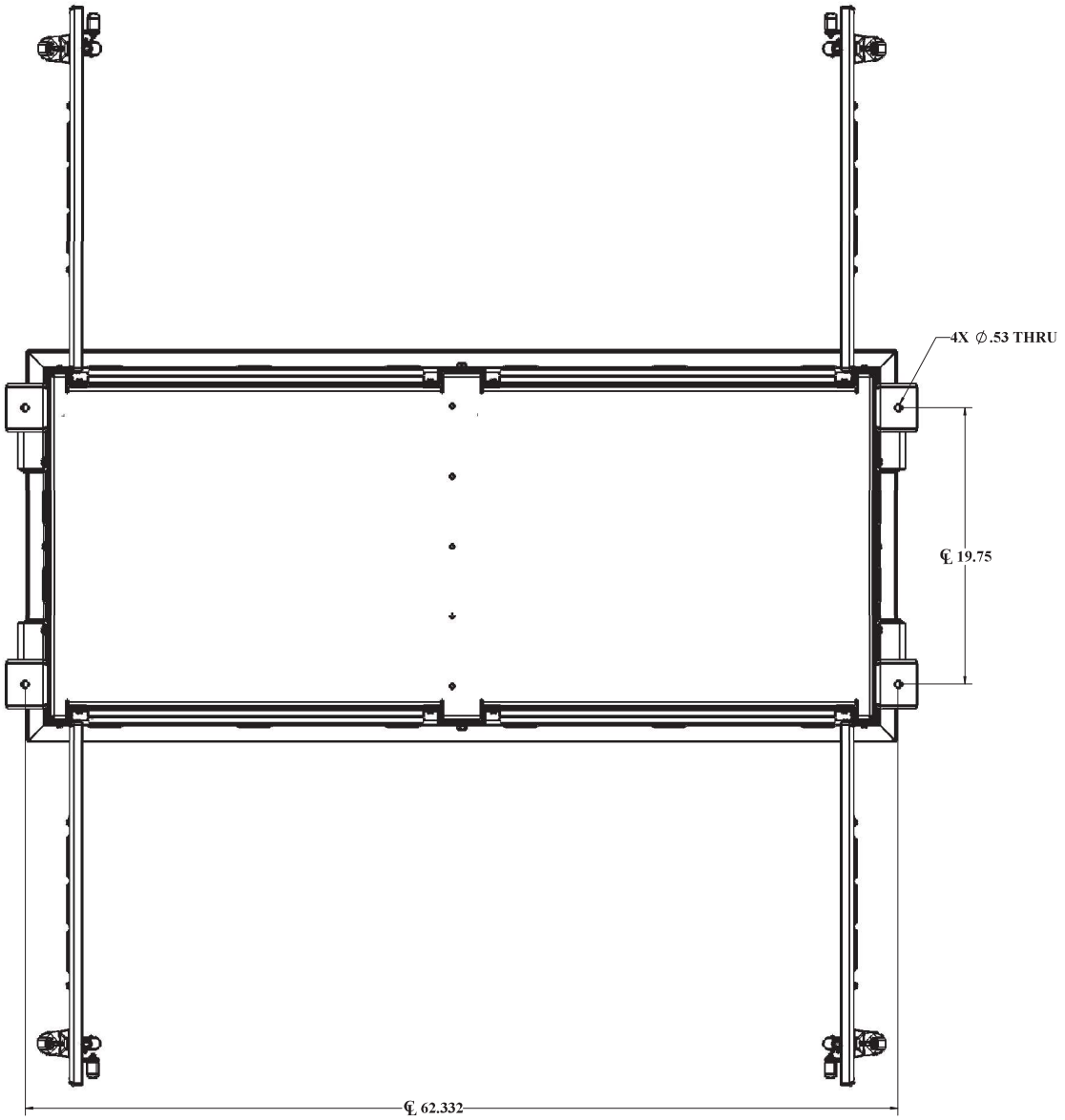

BOTTOM VIEW MOUNTING HOLES

WEB DRAWING (NOT FOR FABRICATION)

UNLESS OTHERWISE SPECIFIED:	DDB Unlimited Inc.			
DIMENSIONS ARE IN INCHES ANGULAR: ±1° FRACTIONAL/NO DECIMAL: ±0.1250 TWO PLACE DECIMAL: ±0.0500 THREE PLACE DECIMAL: ±0.0100 ALL HOLES ⌀±0.005 Ⓜ	2OD-30DX DWG, WEB, 2OD, 30, DX			
	SIZE	Cage Code:	DWG. NO.:	REV
	D	3B5Y5	00959	C
MATERIAL: 50T345T3-0.125 ASTM B209-04	SCALE: 1:8	WEIGHT: 225 lbs.		SHEET 3 OF 3
PAINT: DIAMOND VOGEL, BRIDE GLOSS TEXTURE 8748DS				
DO NOT SCALE DRAWING				

DDB FORM 7.1-REV.K 08/02/17

UNCLASSIFIED PUBLIC

File Location: (DDB) (EPDM Vault:)
C:\DDB\DR Requests\Customers\DDB WEB DWG\2OD Family WEB\DR-00959 (2OD-30DX WEB

An ISO 9001 Certified company

2OD Series

2OD-30DDC

Made in America

Believing in American Craftsmanship

15 YEAR WARRANTY

Why Choose the 2OD Series?

When a single bay solution just isn't sufficient, the 2OD series enclosures are ideal. Constructed of our own rugged Alumiflex®, it is noticeably lighter than steel yet strong enough to rack the heaviest equipment. The 2OD-30DDC includes a number of standard features, such as an adjustable racking system with a versatile rail strut system (R-Strut), a 3-point locking system for security, a reversible rack system for 19" and 23" applications, lifting hooks for easy maneuvering into place, wind locks to secure doors safely when they are open, and our patented Alumishield® solar cap for managing heat loads. Furthermore, DDB offers an array of customizable choices, which include climate control (HVAC), electrical load panels, and cable entry solutions. These possibilities combine to produce an enclosure that can be customized to meet the specific needs that your site and clients may require. The 2OD undoubtably closes the gap between single-bay enclosures and larger building "hut" solutions, giving you the flexibility to meet any need in the field without the required stamps or inspections that traditional "huts" do . With an industry-leading 15-year warranty on every enclosure, DDB provides cutting-edge design, competitive pricing, benchmark lead times, and guaranteed delivery. Whether you require a custom enclosure or something from our substantial stock, our professional staff is here to help you today.



Application Types

Telecommunications
Wireless/Broadband
Fiber Optics
Back Haul
Public Safety
Utility
Base Station
Military
Trailer-Based
Communications Wi-Fi
LTEE/4G/5G



Environmental & Safety Ratings:

- ✓ NEMA 3R (shown above)
- ✓ NEMA 4 and 4X configurable (not shown)

Features

15 Year Warranty
0.125" Aluminum Construction
3 Point Lock System
Heavy Duty Out-Door Construction
Front and Rear Access
Standard Lifting Hooks
Stainless Steel External Hardware/Hinge
Cream Powder-Coat, Standard
Quick Shipping

Weight and Dimensions

Approximate Exterior Enclosure Dimensions:
32”H x 65”W x 39”D
Shipping Dimensions:
40”H x 84”W x 54”D- Palletized
Approximate Shipping Weight:
377 lbs.

2301 S. HWY 77 Pauls Valley, OK 73075
T: (405)-665-2876
sales@ddbunlimited.com www.ddbunlimited.com

DDB UNLIMITED®

An ISO 9001 Certified company

2OD Series

2OD-30DDC

Made in America

Believing in American Craftsmanship

15 YEAR WARRANTY



Features

1. Alumishield
2. 19” and 23" Adjustable Racking Rails
3. 3 Point Locking System
4. Stainless Steel Door Hinge
5. Powder-Coat Cream
6. Wind Locks
7. Rear Door Access
8. Reusable Filters
9. Heavy Duty 0.160" Doors

Scan this code for Climate Control

Scan this code for Accessories

2301 S. HWY 77 Pauls Valley, OK 73075
T: (405)-665-2876
sales@ddbunlimited.com www.ddbunlimited.com

REVISIONS		
REV.	DESCRIPTION	DATE
A	Initial Release per DR-00960	5/28/2014
B	UPDATED FORMAT	11/17/2020

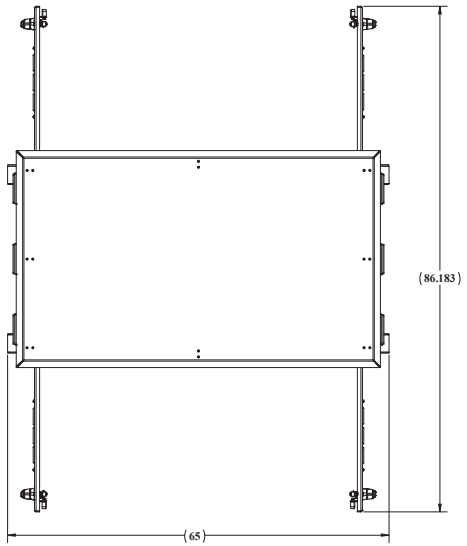

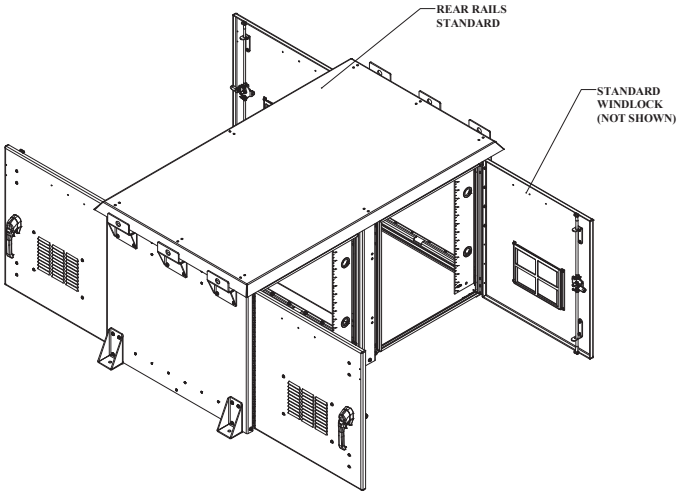

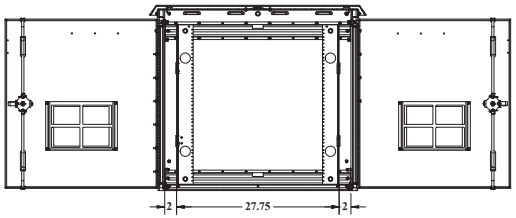

SECTION A-A
SCALE 1 : 10

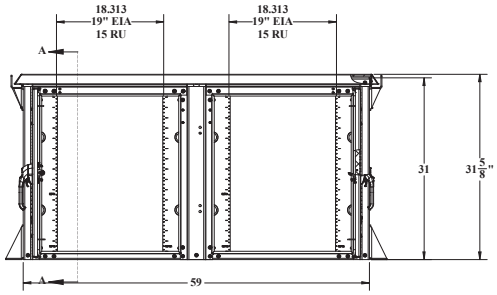

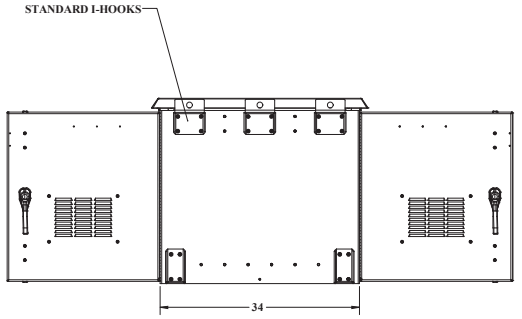

UNLESS OTHERWISE SPECIFIED:	DDB Unlimited Inc.			
DIMENSIONS ARE IN INCHES ANGULAR: FRACTIONAL NO DECIMAL: ±1/16 TWO PLACE DECIMAL: ±.010 TWO PLACE DEC FINAL: ±.0100 THREE PLACE DECIMAL: ±.0050 ALL HOLES ø±0.005	2OD-30DD DWG, WEB, 2OD, 30, DD2OD-30DD			
	SIZE	Cage Code:	DWG. NO.:	REV
	D	3B5Y5	00960	B
MATERIAL: 5052-H32-0.125 ASTM B209-04	SCALE: 1:8	WEIGHT: 270 lbs.		SHEET 1 OF 3
PAINT: DIAMOND VOGEL, BEIGE GLOSS TEXTURE ET-8338				
DO NOT SCALE DRAWING				

DDB FORM 7.1-7 REV K 08/02/17

UNCLASSIFIED PUBLIC

File Location: (DDB)(EPDM Vault:)
C:\DDB\DR Requests\Customers\DDB WEB DWG\2OD Family WEB\DR-00960 (2OD-30DD WEB

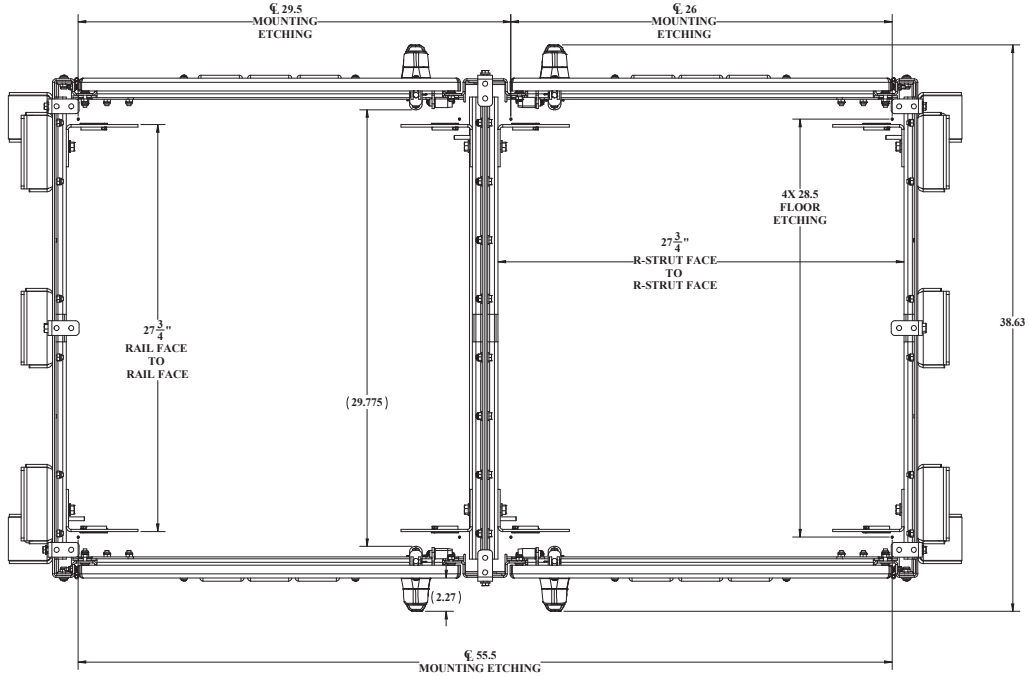

TOP VIEW SOLAR SHIELD AND CEILING NOT SHOWN

UNLESS OTHERWISE SPECIFIED:
DIMENSIONS ARE IN INCHES
ANGULAR: MACH ± BEND ±
TWO PLACE DECIMAL: ± 0.010
THREE PLACE DECIMAL: ± 0.005
ALL HOLES ø

MATERIAL: 5052-H32-0.125 ASTM B209-04
PAINT: DIAMOND VOGEL, BEIGE GLOSS TEXTURE ET-8320
DO NOT SCALE DRAWING

DDB Unlimited Inc.

2OD-30DD (CLOSED)

DWG, WEB, 2OD, 30, DD2OD-30DD (CLOSED)

SIZE	Cage Code:	DWG. NO.:	REV
D	3B5Y5	00960	B
SCALE: 1:8	WEIGHT: 270 lbs.	SHEET 2 OF 3	

DDB FORM 7.1-REV.K 08/02/17

UNCLASSIFIED PUBLIC

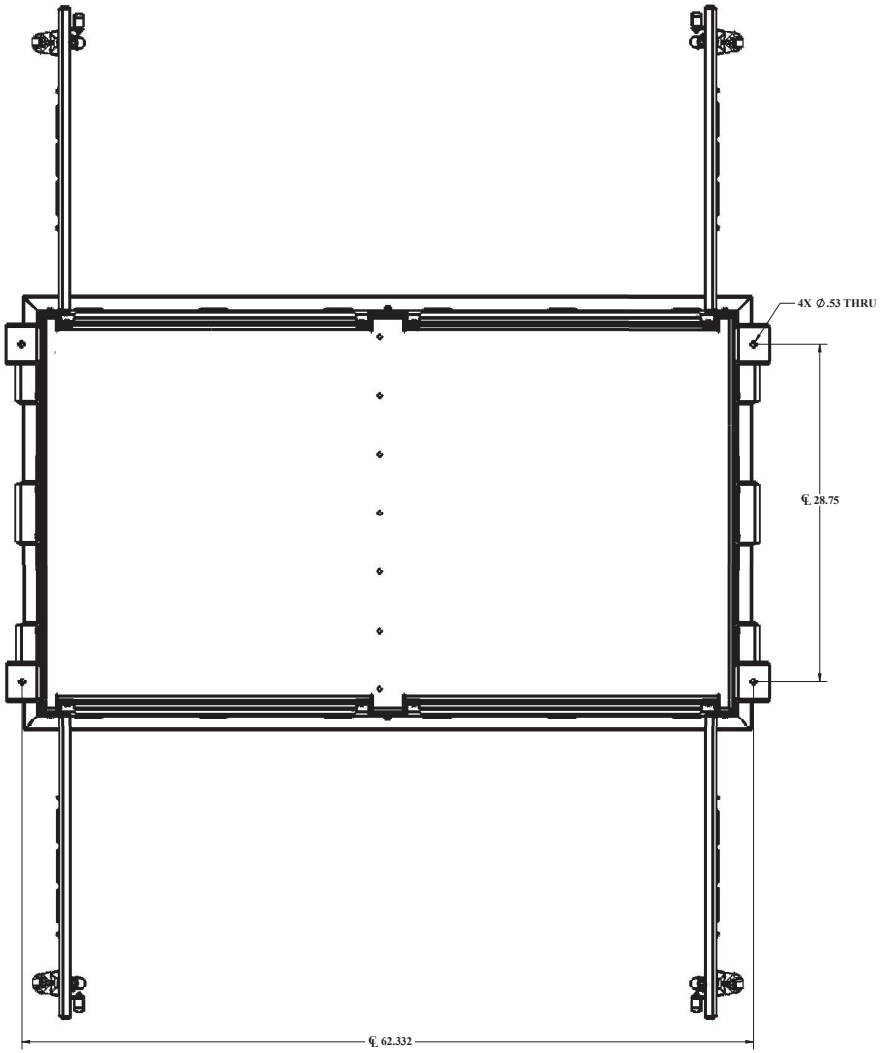

MOUNTING HOLES

UNLESS OTHERWISE SPECIFIED:	DDB Unlimited Inc.			
DIMENSIONS ARE IN INCHES ANGULAR: ±1° FRACTIONAL NO DECIMAL: ±1/16 TWO PLACE DECIMAL: ±0.010 TWO PLACE DECIMAL: ±0.005 THREE PLACE DECIMAL: ±0.010 ALL HOLES ø±0.003	2OD-30DD DWG, WEB, 2OD, 30, DD2OD-30DD			
	SIZE	Cage Code:	DWG. NO.:	REV
	D	385Y5	00960	B
MATERIAL: 5052-H32-0.125 ASTM B209-04	SCALE: 1:8	WEIGHT: 270 lbs.		SHEET 3 OF 3
PAINT: DIAMOND VOGEL, BEIGE GLOSS TEXTURE ET-8320				
DO NOT SCALE DRAWING				

DDB FORM 7.1-REV.K 08/02/17

UNCLASSIFIED PUBLIC

DDB UNLIMITED®

An ISO 9001 Certified company

2OD Series

2OD-30DDXC

Made in America

Believing in American Craftsmanship

15 YEAR WARRANTY

Why Choose the 2OD Series?

When a single bay solution just isn't sufficient, the 2OD series enclosures are ideal. Constructed of our own rugged Alumiflex®, it is noticeably lighter than steel yet strong enough to rack the heaviest equipment. The 2OD-30DDXC includes a number of standard features, such as an adjustable racking system with a versatile rail strut system (R-Strut), a 3-point locking system for security, a reversible rack system for 19" and 23" applications, lifting hooks for easy maneuvering into place, wind locks to secure doors safely when they are open, and our patented Alumishield® solar cap for managing heat loads. Furthermore, DDB offers an array of customizable choices, which include climate control (HVAC), electrical load panels, and cable entry solutions. These possibilities combine to produce an enclosure that can be customized to meet the specific needs that your site and clients may require. The 2OD undoubtably closes the gap between single-bay enclosures and larger building "hut" solutions, giving you the flexibility to meet any need in the field without the required stamps or inspections that traditional "huts" do . With an industry-leading 15-year warranty on every enclosure, DDB provides cutting-edge design, competitive pricing, benchmark lead times, and guaranteed delivery. Whether you require a custom enclosure or something from our substantial stock, our professional staff is here to help you today.



Features

15 Year Warranty

0.125" Aluminum Construction

3 Point Lock System

Heavy Duty Out-Door Construction

Front and Rear Access

Standard Lifting Hooks

Stainless Steel External Hardware/Hinge

Cream Powder-Coat, Standard

Quick Shipping

Application Types

Telecommunications
Wireless/Broadband
Fiber Optics
Back Haul
Public Safety
Utility
Base Station
Military
Trailer-Based Communications
Wi-Fi
LTEE/4G/5G



Environmental & Safety Ratings:

- ✓ NEMA 3R (shown above)
- ✓ NEMA 4 and 4X configurable (not shown)

Weight and Dimensions

Approximate Exterior Enclosure Dimensions:

32”H x 65”W x 47”D

Shipping Dimensions:

54"D x 84”W x 40”H - Palletized

Approximate Shipping Weight:

405 lbs.

2301 S. HWY 77 Pauls Valley, OK 73075
T: (405)-665-2876
sales@ddbunlimited.com www.ddbunlimited.com

DDB UNLIMITED®

An ISO 9001 Certified company

2OD Series

2OD-30DDXC

Made in America

Believing in American Craftsmanship

15 YEAR WARRANTY



Features

1. Alumishield
2. 19” and 23” Adjustable Racking Rails
3. 3 Point Locking System
4. Stainless Steel Door Hinge
5. Powder-Coat Cream
6. Wind Locks
7. Reusable Filters
8. Rear Door Access
9. Heavy Duty 0.160” Doors

2301 S. HWY 77 Pauls Valley, OK 73075
T: (405)-665-2876
sales@ddbunlimited.com www.ddbunlimited.com

Scan this code for Climate Control

Scan this code for Accessories

REVISIONS		
REV.	DESCRIPTION	DATE
A	Initial Release per DR-00962	5/28/2014
B	UPDATED SHEET FORMAT	11/18/2020

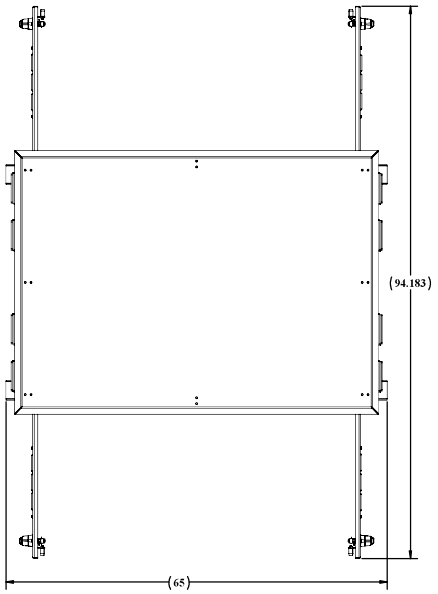

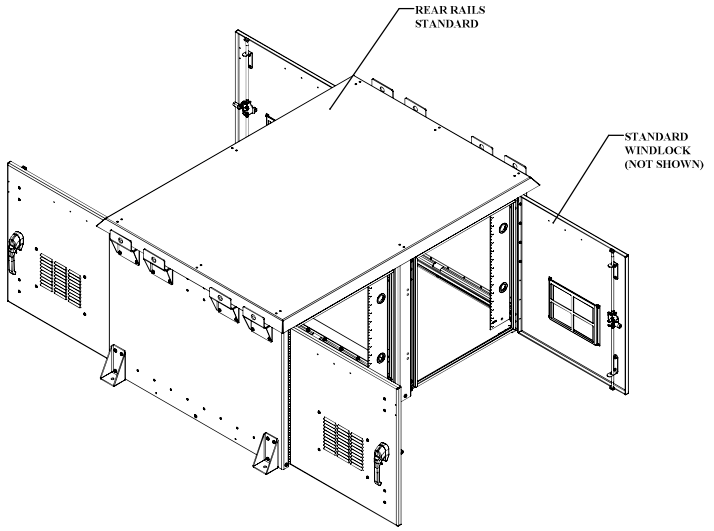

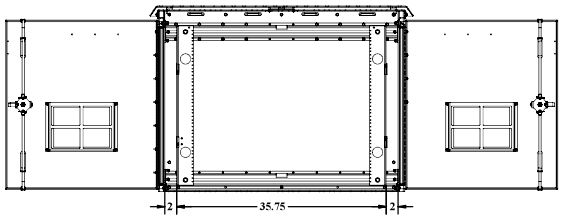

SECTION A-A
SCALE 1 : 10

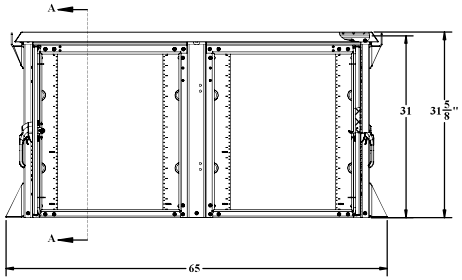

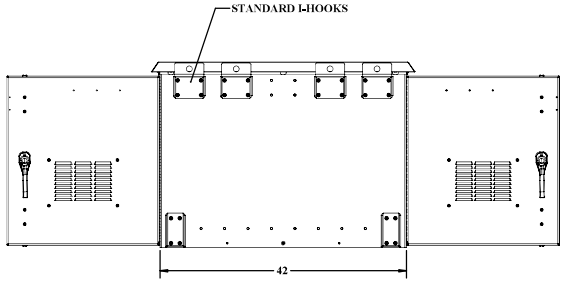

UNLESS OTHERWISE SPECIFIED:	DDB Unlimited Inc.			
DIMENSIONS ARE IN INCHES ANGULAR: FRACTIONAL/NO DECIMAL: ±1/32 TWO PLACE DECIMAL: ±.010 TWO PLACE DECIMAL: ±.0050 THREE PLACE DECIMAL: ±.0030 ALL EDGES ◉ BREAK◉	20D-30DDX DWG, WEB, 20D, 30, DDX20D-30DDX			
	SIZE	Cage Code:	DWG. NO.:	REV
	D	3B5Y5	00962	B
MATERIAL: 5052-H32-0.125 ASTM B209-04	SCALE: 1:8	WEIGHT: 303 lbs.		SHEET 1 OF 3
PAINT: DIAMOND VOGEL, BEIGE GLOSS TEXTURE 874020				
DO NOT SCALE DRAWING				

DDB FORM 7.1-REV.K 08/02/17

UNCLASSIFIED PUBLIC

File Location: (DDB) (EPDM Vault)
C:\DDB\DR Requests\Customers\DDB WEB DWG\20D Family WEB\DR-00962 (20D-30DDX WEB

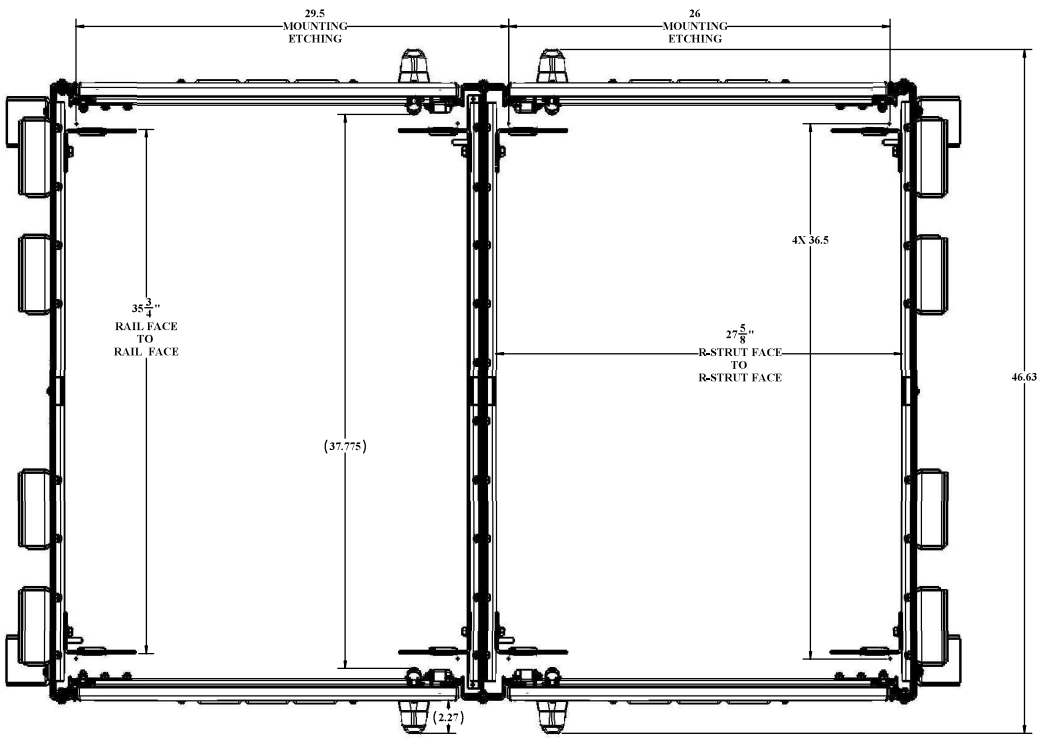

TOP VIEW SOLAR SHIELD AND CEILING NOT SHOWN

UNLESS OTHERWISE SPECIFIED:	DDB Unlimited Inc.			
DIMENSIONS ARE IN INCHES ANGULAR: ±1° FRACTIONAL: ±1/64 TWO PLACE DECIMAL: ±.010 THREE PLACE DECIMAL: ±.005 ALL HOLES ±.003	2OD-30DDX-CLOSED DWG, WEB, 2OD, 30, DDX2OD-30DDX-CLOSED			
	SIZE	Cage Code:	DWG. NO.:	REV
	D	3S5Y5	00962	B
MATERIAL: 5052-H32 0.125 ASTM B209-04	SCALE: 1:8	WEIGHT: 303 lbs.		SHEET 2 OF 3
PAINT: DIAMOND VOGEL, RIDGE GLOSS TEXTURE 874920				
DO NOT SCALE DRAWING				

DDB FORM 7.1-REV.K 08/02/17

UNCLASSIFIED PUBLIC

File Location: (DDB) (EPDM Vault)
C:\DDB\DR Requests\Customers\DDB WEB DWG\2OD Family WEB\DR-00962 (2OD-30DDX WEB

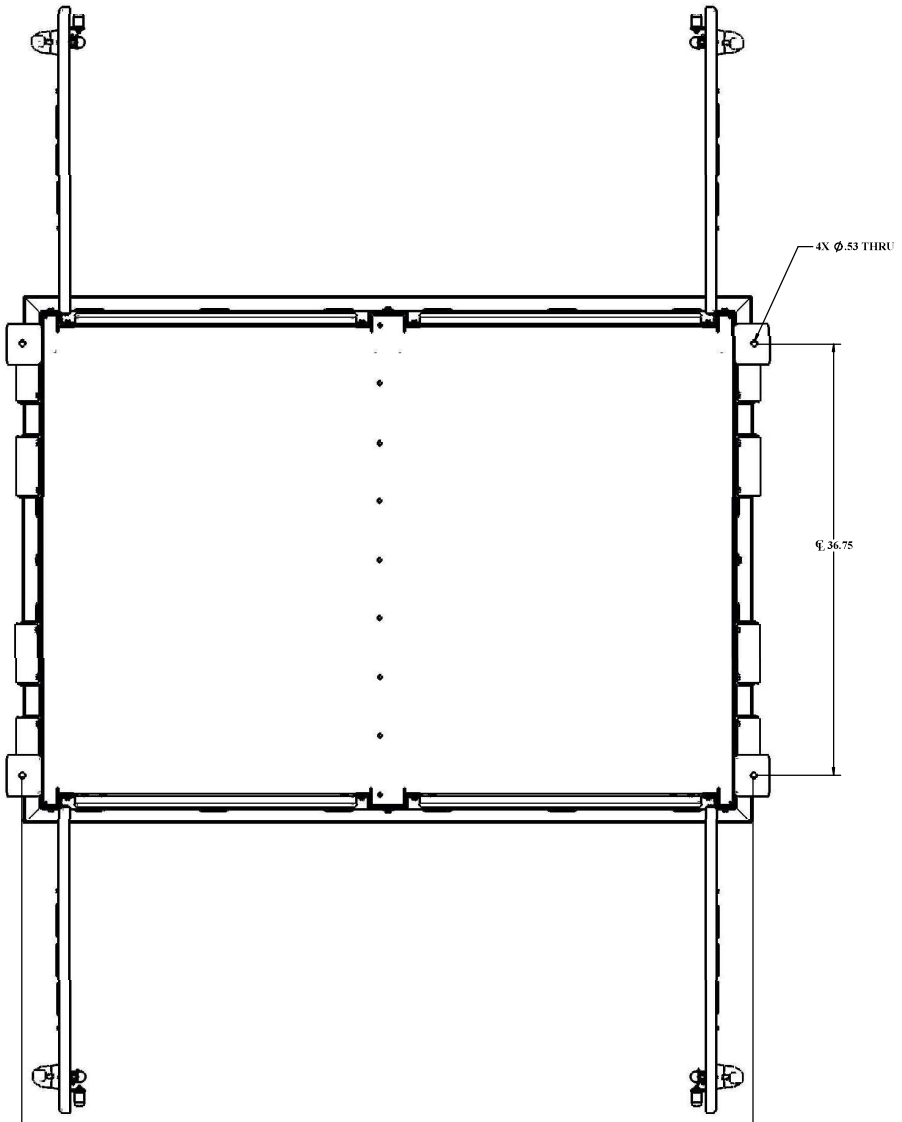

MOUNTING HOLES

UNLESS OTHERWISE SPECIFIED:	DDB Unlimited Inc.		
DIMENSIONS ARE IN INCHES ANGULAR: ±1° FRACTIONAL: ±1/64 TWO PLACE DECIMAL: ±.010 THREE PLACE DECIMAL: ±.005 ALL HOLES ±.003Ø	20D-30DDX DWG, WEB, 20D, 30, DDX20D-30DDX		
	SIZE: D	Cage Code: 385Y5	DWG. NO.: 00962	REV: B
MATERIAL: 50CS4130-T-125 ASTM B209-04	SCALE: 1:8	WEIGHT: 303 lbs.	SHEET 3 OF 3
PAINT: DIAMONDTOUCH, BEIGE GLOSS TEXTURE RT4920			
DO NOT SCALE DRAWING			

DDB FORM 7.1-REV.K 08/02/17

UNCLASSIFIED PUBLIC

An ISO 9001 Certified company

2OD Series

2OD-50DXC

Made in America

Believing in American Craftsmanship

15 YEAR WARRANTY

Why Choose the 2OD Series?

When a single bay solution just isn't sufficient, the 2OD series enclosures are ideal. Constructed of our own rugged Alumiflex®, it is noticeably lighter than steel yet strong enough to rack the heaviest equipment. The 2OD-50DXC includes a number of standard features, such as an adjustable racking system with a versatile rail strut system (R-Strut), a 3-point locking system for security, a reversible rack system for 19" and 23" applications, lifting hooks for easy maneuvering into place, wind locks to secure doors safely when they are open, and our patented Alumishield® solar cap for managing heat loads. Furthermore, DDB offers an array of customizable choices, which include climate control (HVAC), electrical load panels, and cable entry solutions. These possibilities combine to produce an enclosure that can be customized to meet the specific needs that your site and clients may require. The 2OD undoubtably closes the gap between single-bay enclosures and larger building "hut" solutions, giving you the flexibility to meet any need in the field without the required stamps or inspections that traditional "huts" do . With an industry-leading 15-year warranty on every enclosure, DDB provides cutting-edge design, competitive pricing, benchmark lead times, and guaranteed delivery. Whether you require a custom enclosure or something from our substantial stock, our professional staff is here to help you today.



Application Types

Telecommunications
Wireless/Broadband
Fiber Optics
Back Haul
Public Safety
Utility
Base Station
Military
Trailer-Based Communications
Wi-Fi
LTEE/4G/5G



Environmental & Safety Ratings:

- ✓ NEMA 3R (shown above)
- ✓ NEMA 4 and 4X configurable (not shown)

Features

15 Year Warranty
0.125" Aluminum Construction
3 Point Lock System
Heavy Duty Out-Door Construction
Front and Rear Access
Standard Lifting Hooks
Stainless Steel External Hardware/Hinge
Cream Powder-Coat, Standard
Quick Shipping

Weight and Dimensions

Approximate Exterior Enclosure Dimensions:
51”H x 65”W x 30”D
Shipping Dimensions:
54”D x 84”W x 60"H - Palletized
Approximate Shipping Weight:
409 lbs.

2301 S. HWY 77 Pauls Valley, OK 73075
T: (405)-665-2876
sales@ddbunlimited.com www.ddbunlimited.com

DDB UNLIMITED®

An ISO 9001 Certified company

2OD Series

2OD-50DXC

Made in America

Believing in American Craftsmanship

15 YEAR WARRANTY



Features

1. Alumishield
2. 19” and 23” Adjustable Racking Rails
3. 3 Point Locking System
4. Stainless Steel Door Hinge
5. Powder-Coat Cream
6. Wind Locks
7. Rear Door Access
8. Reusable Filters
9. Heavy Duty 0.160” Doors

2301 S. HWY 77 Pauls Valley, OK 73075
T: (405)-665-2876
sales@ddbunlimited.com www.ddbunlimited.com

Scan this code for Climate Control

Scan this code for Accessories

REVISIONS		
REV.	DESCRIPTION	DATE
A	Initial Release per DR-00963	5/28/2014
B	UPDATED TO 2017 WEBSITE FORMAT	8/11/2017
C	UPDATED NEW FORMAT	11/18/2020

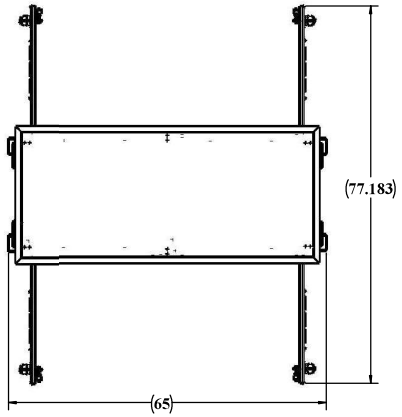

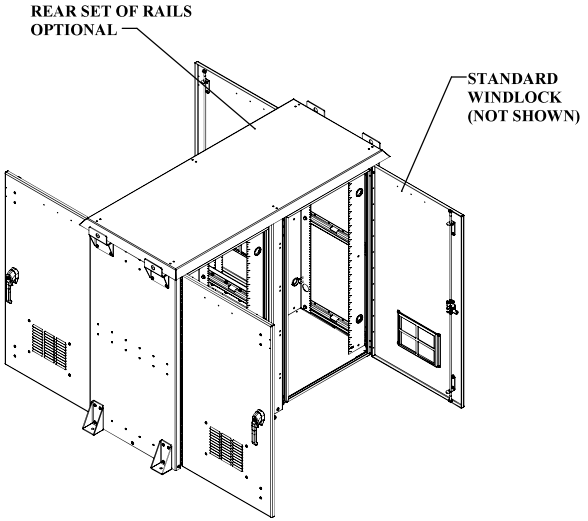

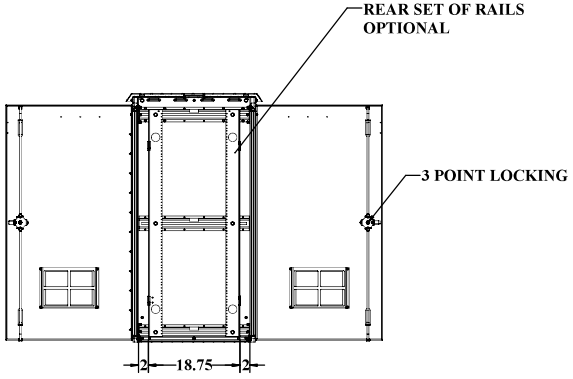

SECTION A-A
SCALE 1 : 12

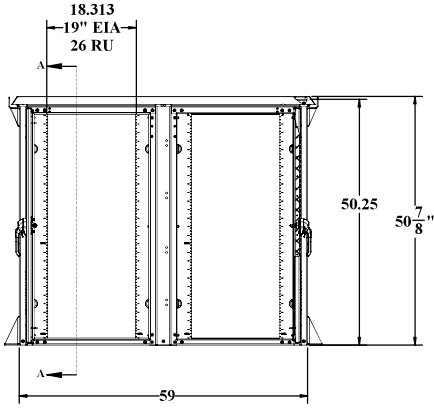

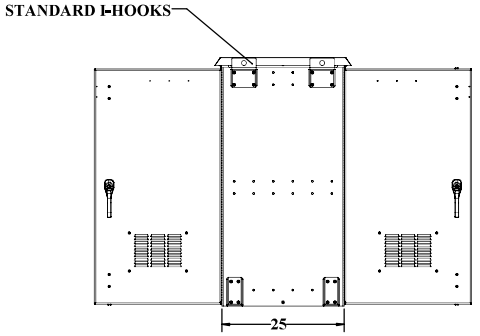

UNLESS OTHERWISE SPECIFIED: DIMENSIONS ARE IN INCHES. ANGULAR: FRACTIONAL ±1/32 DECIMAL: ±.005 TWO PLACE DECIMAL: ±.010 THREE PLACE DECIMAL: ±.005	DDB Unlimited Inc.		
	20D-50DX		
	DWG, WEB, 20D, 50, DX		
	SIZE: D	Cage Code: 3B5Y5	DWG. NO.: 00963 REV: C
MATERIAL: 5052-H32 0.125 ASTM B209-04	SCALE: 1:8	WEIGHT: 304 lbs.	SHEET 1 OF 3
PAINT: DIAMOND VOGEL, BRIDGE GLOSS TEXTURE 874920			
DO NOT SCALE DRAWING			

DDB FORM 7.1-REV.K 08/02/17

UNCLASSIFIED PUBLIC

File Location: (DDB)(EPDM Vault)
C:\DDB\DR Requests\Customers\DDB WEB DWG\20D Family WEB\DR-00963 (20D-50DX WEB

WEB DRAWING (NOT FOR FABRICATION)

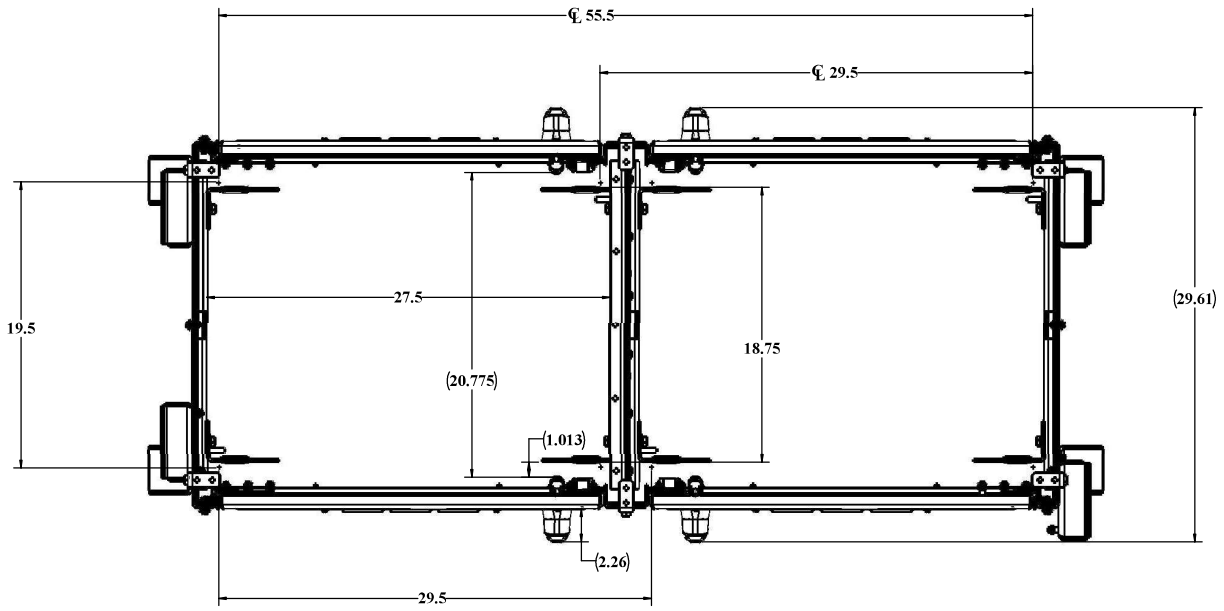

TOP VIEW SOLAR SHEILD AND CEILING NOT SHOWN

DDB FORM 7.1-REV.K 08/02/17

WEB DRAWING (NOT FOR FABRICATION)

UNLESS OTHERWISE SPECIFIED: DIMENSIONS ARE IN INCHES. ANGULAR: FRACTIONAL ±1/32 DECIMAL: TWO PLACE DECIMAL: THREE PLACE DECIMAL: ALL EDGES ⌀125/32	DDB Unlimited Inc.
	20D-50DX (CLOSED)
	DWG, WEB, 20D, 50, DX
SIZE D	Cage Code: 385Y5
DWG. NO.: 00963	REV C
MATERIAL: 5052-H32 ASTM B209-04	SCALE: 1:8
WEIGHT: 304 lbs.	SHEET 2 OF 3
PAINT: DIAMOND VOGEL, RESIL 14A930 TEXTURE 154670	
DO NOT SCALE DRAWING	

UNCLASSIFIED PUBLIC
THE INFORMATION CONTAINED IN THIS DRAWING IS THE SOLE PROPERTY OF DDB Unlimited, INC. ANY REPRODUCTION IN PART OR AS A WHOLE WITHOUT THE WRITTEN PERMISSION OF DDB Unlimited, INC. IS PROHIBITED.

File Location: (DDB)(EPDM Vault)
C:\DDB\DR Requests\Customers\DDB WEB DWG\20D Family WEB\DR-00963 (20D-50DX WEB

WEB DRAWING (NOT FOR FABRICATION)

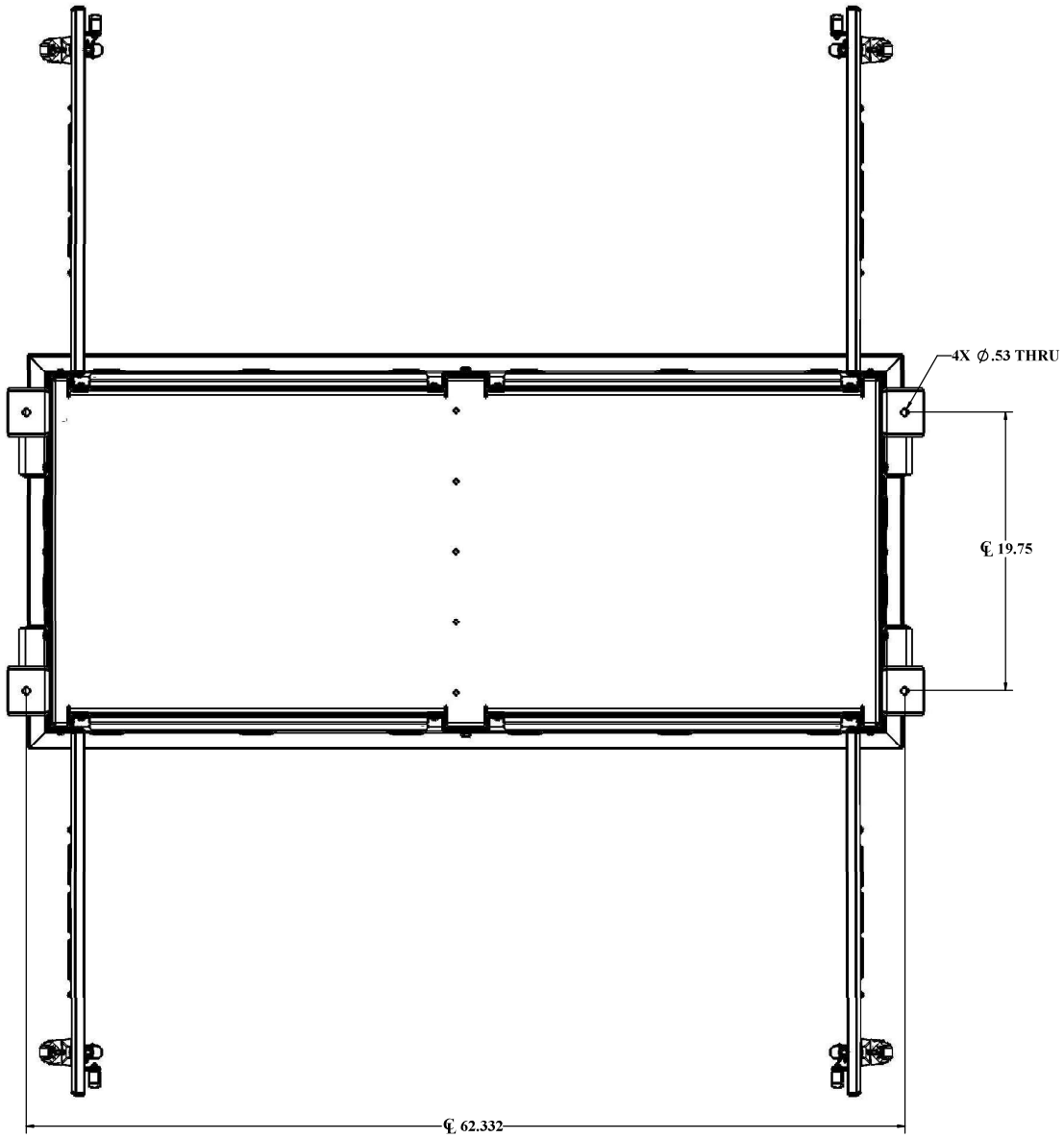

BOTTOM VIEW MOUNTING HOLES

WEB DRAWING (NOT FOR FABRICATION)

UNLESS OTHERWISE SPECIFIED: DIMENSIONS ARE IN INCHES. ANGULAR: FRACTIONAL: TWO PLACE DECIMAL: THREE PLACE DECIMAL: ALL EDGES	DDB Unlimited Inc. 20D-30DX DWG, WEB, 20D, 30, DX
MATERIAL: 5052-H32 ASTM B209-04	SIZE: D · Cage Code: 3S5Y5 · DWG. NO.: 00963 · REV: C
PAINT: DIAMOND VOGEL SERIE GLOSS ELECTRIC 154020	SCALE: 1:8 · WEIGHT: 225 lbs. · SHEET 3 OF 3
DO NOT SCALE DRAWING	

DDB FORM 7.1-REV.K 08/02/17

UNCLASSIFIED PUBLIC
THE INFORMATION CONTAINED IN THIS DRAWING IS THE SOLE PROPERTY OF DDB Unlimited, INC. ANY REPRODUCTION IN PART OR AS A WHOLE WITHOUT THE WRITTEN PERMISSION OF DDB Unlimited, INC. IS PROHIBITED.

File Location: (DDB)(EPDM Vault)
C:\DDB\DR Requests\Customers\DDB WEB DWG\20D Family WEB\DR-00963 (20D-50DX WEB

An ISO 9001 Certified company

2OD Series

2OD-50DDC

Made in America

Believing in American Craftsmanship

15 YEAR WARRANTY

Why Choose the 2OD Series?

When a single bay solution just isn't sufficient, the 2OD series enclosures are ideal. Constructed of our own rugged Alumiflex®, it is noticeably lighter than steel yet strong enough to rack the heaviest equipment. The 2OD-50DDC includes a number of standard features, such as an adjustable racking system with a versatile rail strut system (R-Strut), a 3-point locking system for security, a reversible rack system for 19" and 23" applications, lifting hooks for easy maneuvering into place, wind locks to secure doors safely when they are open, and our patented Alumishield® solar cap for managing heat loads. Furthermore, DDB offers an array of customizable choices, which include climate control (HVAC), electrical load panels, and cable entry solutions. These possibilities combine to produce an enclosure that can be customized to meet the specific needs that your site and clients may require. The 2OD undoubtably closes the gap between single-bay enclosures and larger building "hut" solutions, giving you the flexibility to meet any need in the field without the required stamps or inspections that traditional "huts" do . With an industry-leading 15-year warranty on every enclosure, DDB provides cutting-edge design, competitive pricing, benchmark lead times, and guaranteed delivery. Whether you require a custom enclosure or something from our substantial stock, our professional staff is here to help you today.



Application Types

Telecommunications
Wireless/Broadband
Fiber Optics
Back Haul
Public Safety
Utility
Base Station
Military
Trailer-Based Communications
Wi-Fi
LTEE/4G/5G



Environmental & Safety Ratings:

- ✓ NEMA 3R (shown above)
- ✓ NEMA 4 and 4X configurable (not shown)

Features

15 Year Warranty
0.125" Aluminum Construction
3 Point Lock System
Heavy Duty Out-Door Construction
Front and Rear Access
Standard Lifting Hooks
Stainless Steel External Hardware/Hinge
Cream Powder-Coat, Standard
Quick Shipping

Weight and Dimensions

Approximate Exterior Enclosure Dimensions:
51”H x 65”W x 39”D
Shipping Dimensions:
60”H x 84”W x 54”D- Palletized
Approximate Shipping Weight:
476 lbs.

2301 S. HWY 77 Pauls Valley, OK 73075
T: (405)-665-2876
sales@ddbunlimited.com www.ddbunlimited.com

DDB UNLIMITED®

An ISO 9001 Certified company

2OD Series

2OD-50DDC

Made in America

Believing in American Craftsmanship

15 YEAR WARRANTY



Features

1. Alumishield
2. 19” and 23” Adjustable Racking Rails
3. 3 Point Locking System
4. Stainless Steel Door Hinge
5. Powder-Coat Cream
6. Wind Lock
7. Rear Access Door
8. Reusable Filters
9. Heavy Duty 0.160” Doors

2301 S. HWY 77 Pauls Valley, OK 73075
T: (405)-665-2876
sales@ddbunlimited.com www.ddbunlimited.com

Scan this code for Climate Control

Scan this code for Accessories

REVISIONS		
REV.	DESCRIPTION	DATE
A	Initial Release per DR-00964	5/28/2014
B	UPDATED TO NEW REQUIREMENTS	8/11/2017
C	NEW FORMAT	11/23/2020

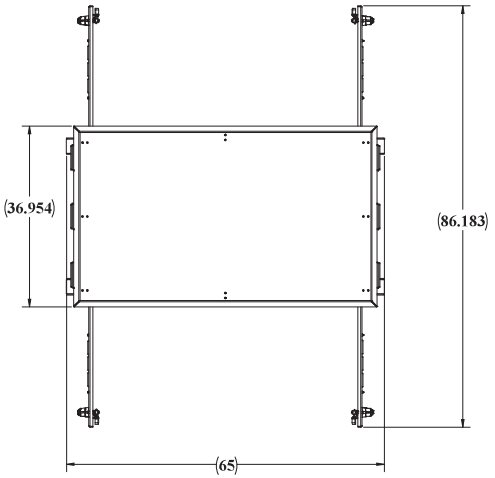

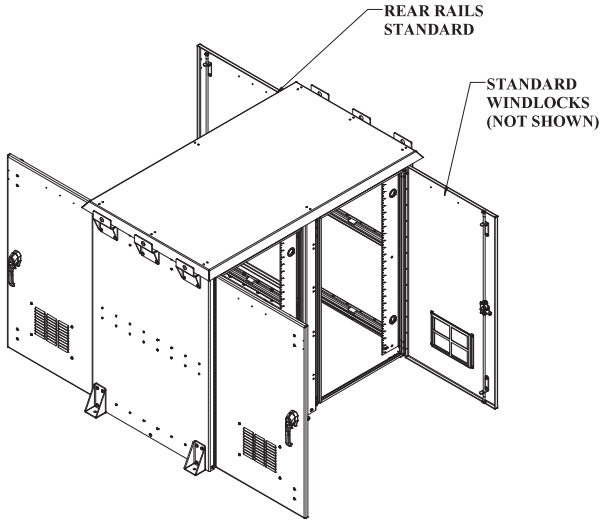

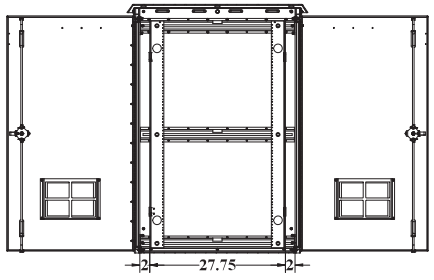

SECTION A-A
SCALE 1 : 12

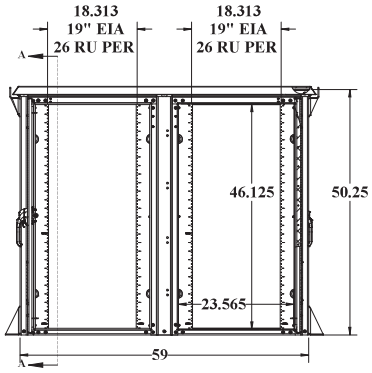

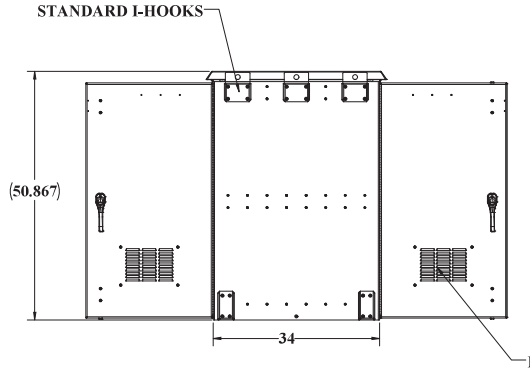

UNLESS OTHERWISE SPECIFIED:	DDB Unlimited Inc.			
DIMENSIONS ARE IN INCHES ANGULAR: ±1° FRACTIONAL/NO DECIMAL: ±0.125 TWO PLACE DECIMAL: ±0.010 TWO PLACE DECIMAL: ± 0.030 THREE PLACE DECIMAL: ± 0.005 ALL HOLES ⌀0.005Ⓜ	20D-50DD DWG, WEB, 20D, 50, DD20D-50DD			
	SIZE	Cage Code:	DWG. NO.:	REV
	D	3S5Y5	00964	C
MATERIAL: 5052-H32-0.125 ASTM B209-04	SCALE: 1:8	WEIGHT: 358 lbs.		SHEET 1 OF 3
PAINT: DIAMOND VOGEL, BRIDGE GLOSS TEXTURE ET4920				
DO NOT SCALE DRAWING				

TDDB-FO-DWG-7.1-REV.K 08/02/17

UNCLASSIFIED PUBLIC

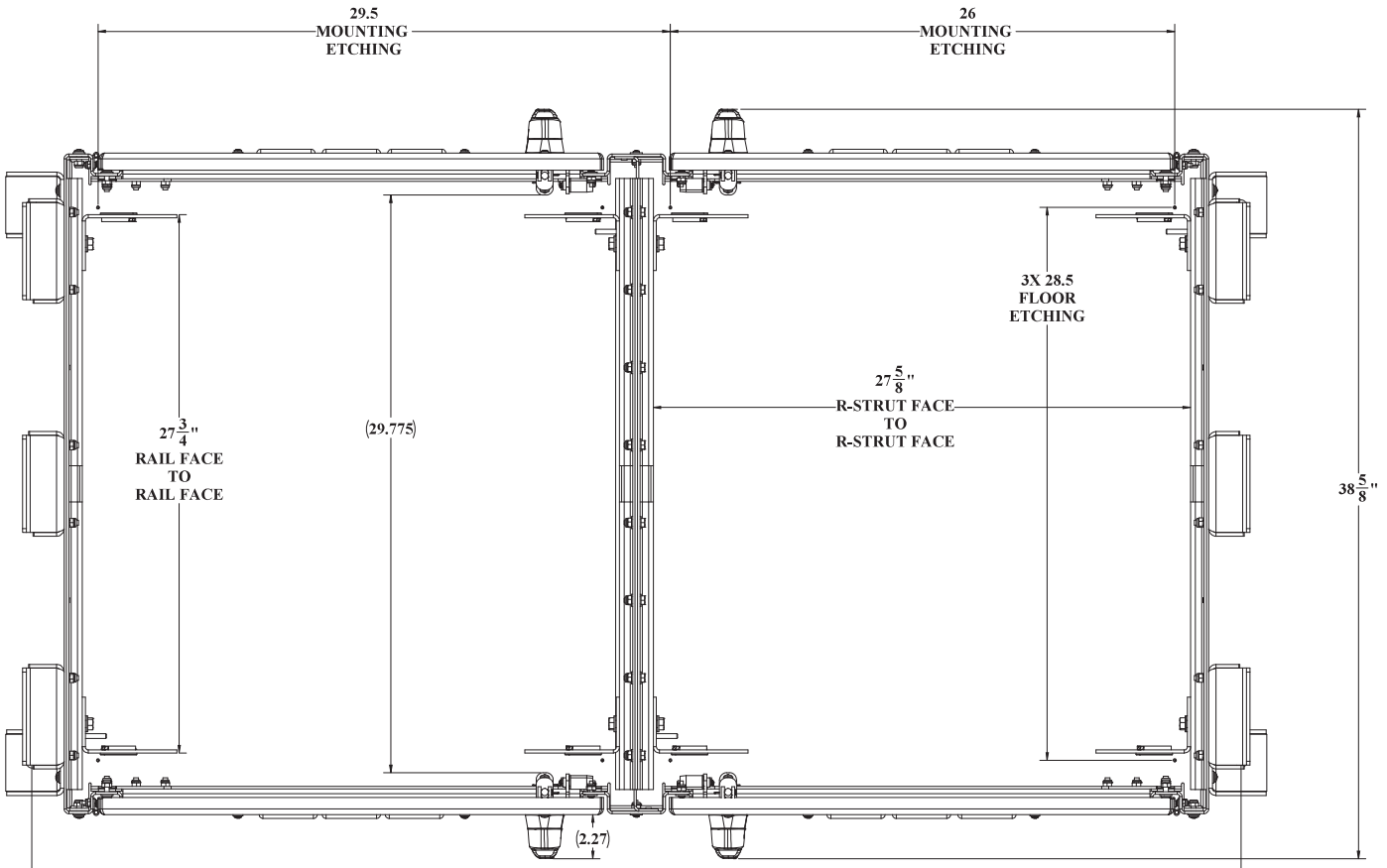

ALUMASHIELD AND CEILING NOT SHOWN

CUSTOMER CONFIDENTIAL

DDB FORM 7.1-REV.K 08/02/17

UNLESS OTHERWISE SPECIFIED:	DDB Unlimited Inc.		
DIMENSIONS ARE IN INCHES ANGULAR: ±1° FRACTIONAL/NO DECIMAL: ±0.125 TWO PLACE DECIMAL: ±.01 THREE PLACE DECIMAL: ±.005 ALL EDGES ⌀100	20D-50DD (CLOSED) DWG, WEB, 20D, 50, DD20D-50DD (CLOSED)		
	SIZE: D	Cage Code: 385Y5	DWG. NO.: 00964 REV: C
MATERIAL: 5052-H32-0.125 ASTM B209-04	SCALE: 1:8	WEIGHT: 355 lbs.	SHEET 2 OF 3
PAINT: DIAMOND VOGEL, BRIDGE GLOSS TEXTURE ET4920			
DO NOT SCALE DRAWING			

File Location: (DDB) (EPDM Vault:)
C:\DDB\DR Requests\Customers\DDB WEB DWG\20D Family WEB\DR-00964 (20D-50DD WEB

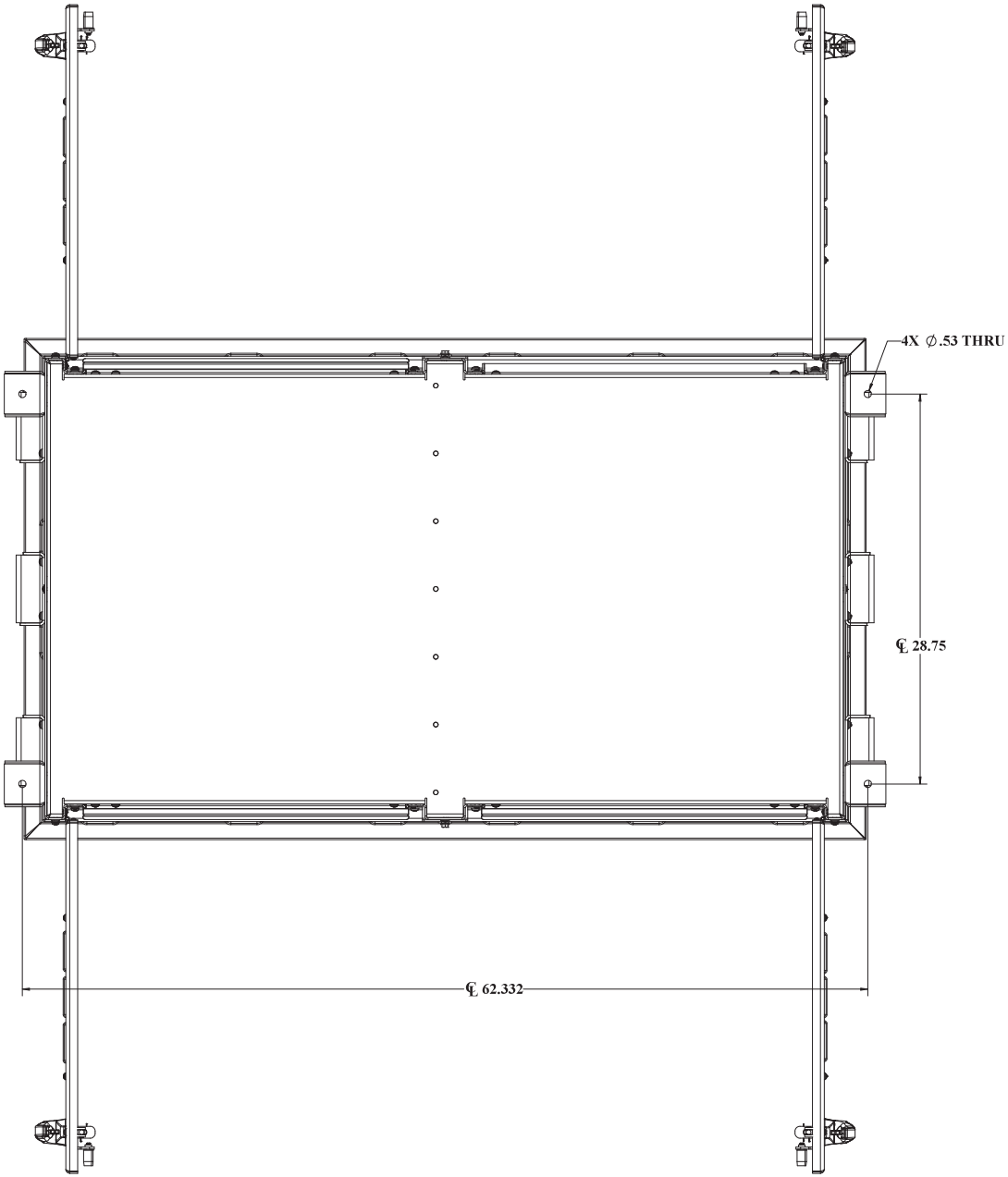

UNLESS OTHERWISE SPECIFIED:	DDB Unlimited Inc.			
DIMENSIONS ARE IN INCHES ANGULAR: ±1° FRACTIONAL/NO DECIMAL: ±0.125 TWO PLACE DECIMAL: ±0.010 TWO PLACE DECIMAL: ± 0.0150 THREE PLACE DECIMAL: ± 0.0100 ALL HOLES ⌀±0.005Ⓜ	20D-50DD DWG, WEB, 20D, 50, DD20D-50DD			
	SIZE	Cage Code:	DWG. NO.:	REV
	D	3S5Y5	00964	C
MATERIAL: 5052-H32-0.125 ASTM B209-04	SCALE: 1:8	WEIGHT: 358 lbs.		SHEET 3 OF 3
PAINT: DIAMOND VOGEL, BEIGE GLOSS TEXTURE 8748DS				
DO NOT SCALE DRAWING				

DDB FORM 7.1-REV.K 08/02/17

UNCLASSIFIED PUBLIC

File Location: (DDB) (EPDM Vault:)
C:\DDB\DR Requests\Customers\DDB WEB DWG\20D Family WEB\DR-00964 (20D-50DD WEB

DDB UNLIMITED®

An ISO 9001 Certified company

2OD Series

2OD-50DDXC

Made in America

Believing in American Craftsmanship

15 YEAR WARRANTY

Why Choose the 2OD Series?

When a single bay solution just isn't sufficient, the 2OD series enclosures are ideal. Constructed of our own rugged Alumiflex®, it is noticeably lighter than steel yet strong enough to rack the heaviest equipment. The 2OD-50DDXC includes a number of standard features, such as an adjustable racking system with a versatile rail strut system (R-Strut), a 3-point locking system for security, a reversible rack system for 19" and 23" applications, lifting hooks for easy maneuvering into place, wind locks to secure doors safely when they are open, and our patented Alumishield® solar cap for managing heat loads. Furthermore, DDB offers an array of customizable choices, which include climate control (HVAC), electrical load panels, and cable entry solutions. These possibilities combine to produce an enclosure that can be customized to meet the specific needs that your site and clients may require. The 2OD undoubtably closes the gap between single-bay enclosures and larger building "hut" solutions, giving you the flexibility to meet any need in the field without the required stamps or inspections that traditional "huts" do . With an industry-leading 15-year warranty on every enclosure, DDB provides cutting-edge design, competitive pricing, benchmark lead times, and guaranteed delivery. Whether you require a custom enclosure or something from our substantial stock, our professional staff is here to help you today.



Application Types

Telecommunications
Wireless/Broadband
Fiber Optics
Back Haul
Public Safety
Utility
Base Station
Military
Trailer-Based Communications
Wi-Fi
LTEE/4G/5G



Environmental & Safety Ratings:

- ✓ NEMA 3R (shown above)
- ✓ NEMA 4 and 4X configurable (not shown)

Features

15 Year Warranty
0.125" Aluminum Construction
3 Point Lock System
Heavy Duty Out-Door Construction
Front and Rear Access
Standard Lifting Hooks
Stainless Steel External Hardware/Hinge
Cream Powder-Coat, Standard
Quick Shipping

Weight and Dimensions

Approximate Exterior Enclosure Dimensions:
51”H x 65”W x 47”D
Shipping Dimensions:
60"H x 84”W x 54”D - Palletized
Approximate Shipping Weight:
500 lbs.

2301 S. HWY 77 Pauls Valley, OK 73075
T: (405)-665-2876
sales@ddbunlimited.com www.ddbunlimited.com

DDB UNLIMITED®

An ISO 9001 Certified company

2OD Series

2OD-50DDXC

Made in America

Believing in American Craftsmanship

15 YEAR WARRANTY

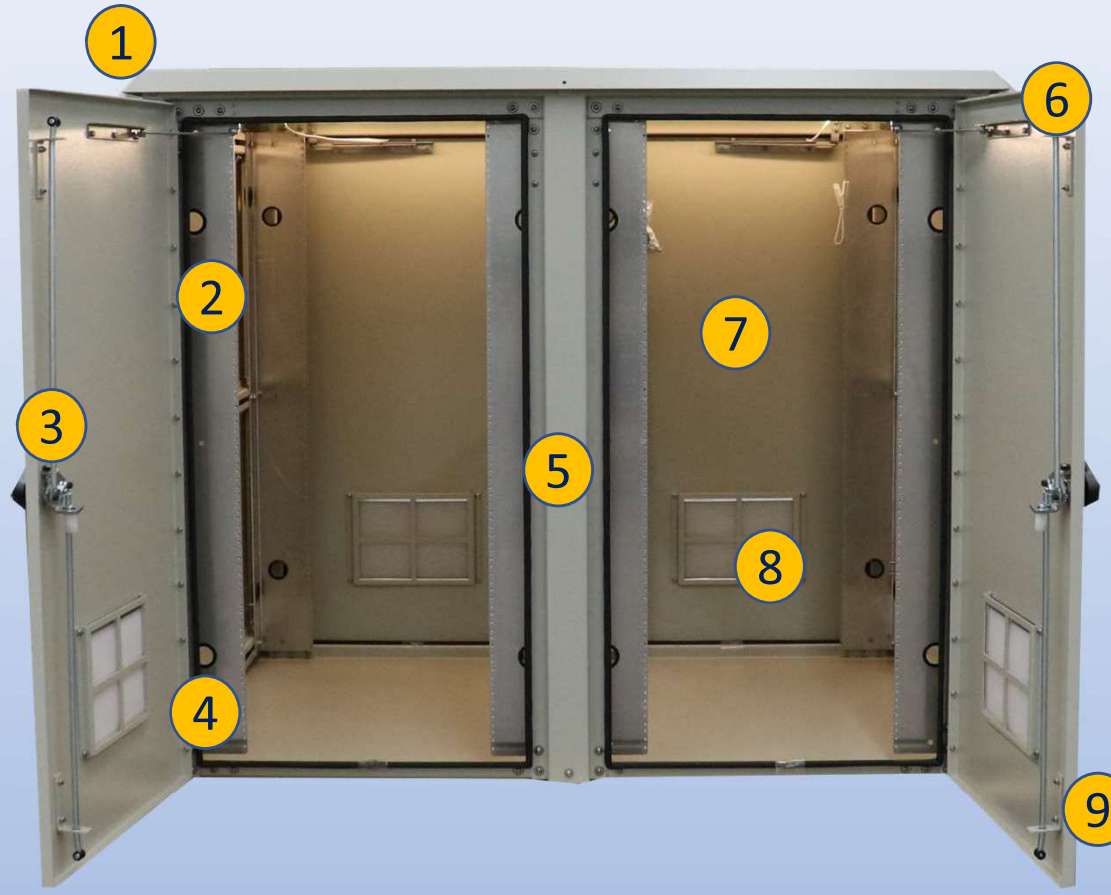

Features

1. Alumishield
2. 19” and 23” Adjustable Racking Rails
3. 3 Point Locking System
4. Stainless Steel Door Hinge
5. Powder-Coat Cream
6. Wind Locks
7. Rear Access Door
8. Reusable Filters
9. Heavy Duty 0.160” Doors

2301 S. HWY 77 Pauls Valley, OK 73075
T: (405)-665-2876
sales@ddbunlimited.com www.ddbunlimited.com

Scan this code for Climate Control

Scan this code for Accessories

REVISIONS		
REV.	DESCRIPTION	DATE
A	Initial Release per DR-00965	5/28/2014
B	UPDATED FORMAT	11/24/2020

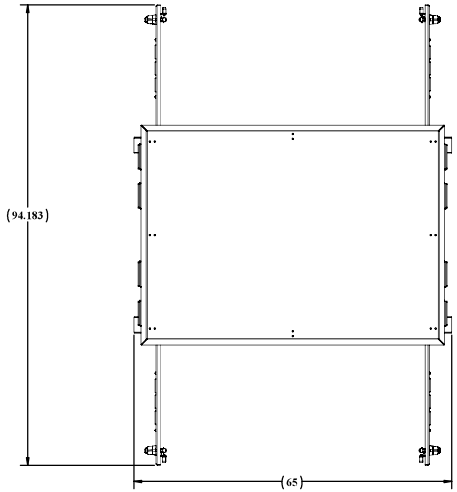

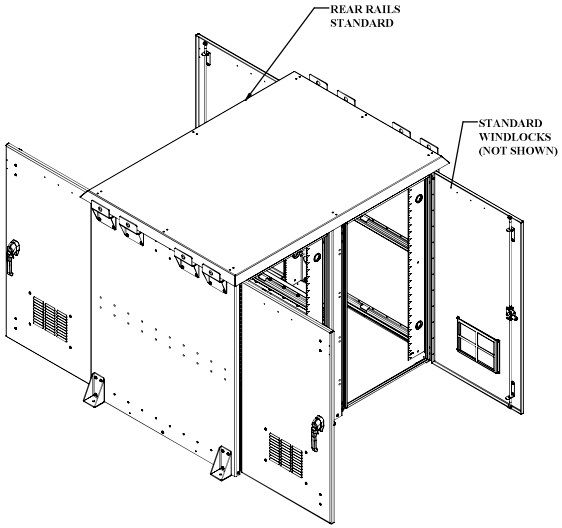

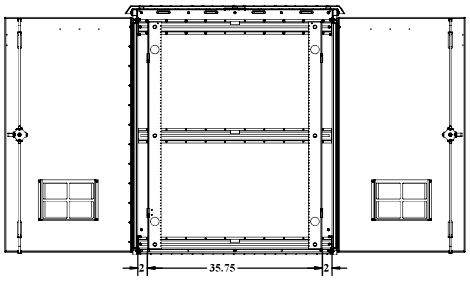

SECTION A-A
SCALE 1 : 12

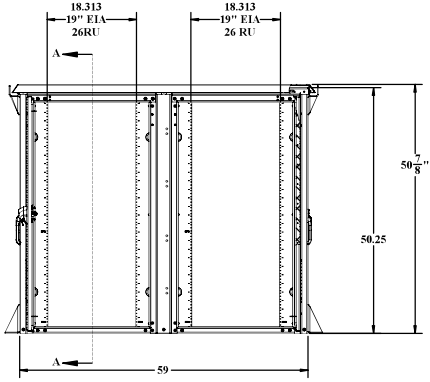

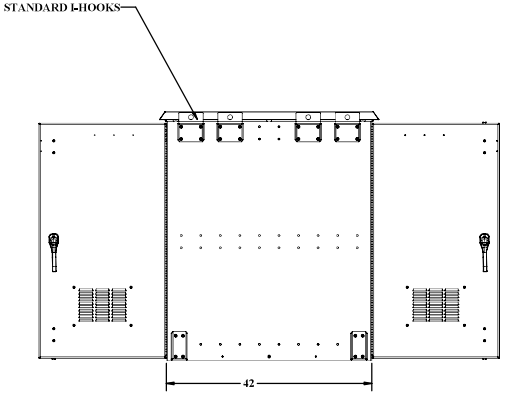

UNLESS OTHERWISE SPECIFIED:	DDB Unlimited Inc.			
DIMENSIONS ARE IN INCHES ANGULAR: ±1° FRACTIONAL: NO DECIMAL: ±1/16 TWO PLACE DECIMAL: ±.010 TWO PLACE DECIMAL: ±.005 THREE PLACE DECIMAL: ±.0050 ALL HOLES ±.003	2OD-50DDX DWG, WEB, 2OD, 50, DDX2OD-50DDX			
	SIZE	Cage Code:	DWG. NO.:	REV
	D	3B5Y5	00965	B
MATERIAL: 5052-H32-0.125 ASTM B209-04	SCALE: 1:8	WEIGHT: 397 lbs.		SHEET 1 OF 3
PAINT: DIAMOND VOGEL, BEIGE GLOSS TEXTURE 874920				
DO NOT SCALE DRAWING				

DDB FORM 7.1-7 REV K 08/02/17

UNCLASSIFIED PUBLIC

File Location: (DDB) (EPDM Vault)
C:\DDB\DR Requests\Customers\DDB WEB DWG\2OD Family WEB\DR-00965 (2OD-50DDX WEB

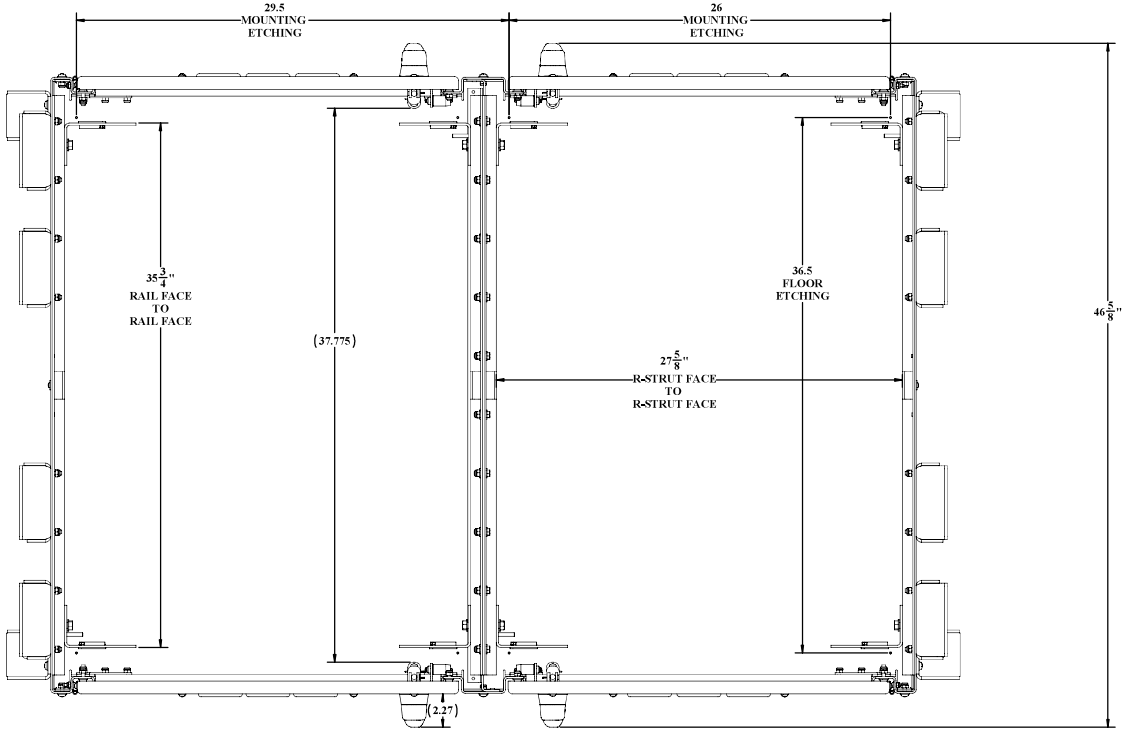

TOP VIEW SHOWN NO CEILING OR SOLAR SHIED

UNLESS OTHERWISE SPECIFIED:	DDB Unlimited Inc.			
DIMENSIONS ARE IN INCHES ANGULAR: ±1° FRACTIONAL: ±1/32 TWO PLACE DECIMAL: ±.010 THREE PLACE DECIMAL: ±.005 ALL EDGES ⌀.015 R	2OD-30DDX-CLOSED DWG, WEB, 2OD, 30, DDX2OD-30DDX-CLOSED			
	SIZE	Cage Code:	DWG. NO.:	REV
	D	3B5Y5	00965	B
MATERIAL: 5052-H32 0.125 ASTM B209-04	SCALE: 1:12	WEIGHT: 303 lbs.		SHEET 2 OF 3
PAINT: DIAMOND VOGEL, BEIGE GLOSS TEXTURE 87-9020				
DO NOT SCALE DRAWING				

DDB FORM 7.1-REV.K 08/02/17

UNCLASSIFIED PUBLIC

File Location: (DDB) (EPDM Vault)
C:\DDB\DR Requests\Customers\DDB WEB DWG\2OD Family WEB\DR-00965 (2OD-50DDX WEB

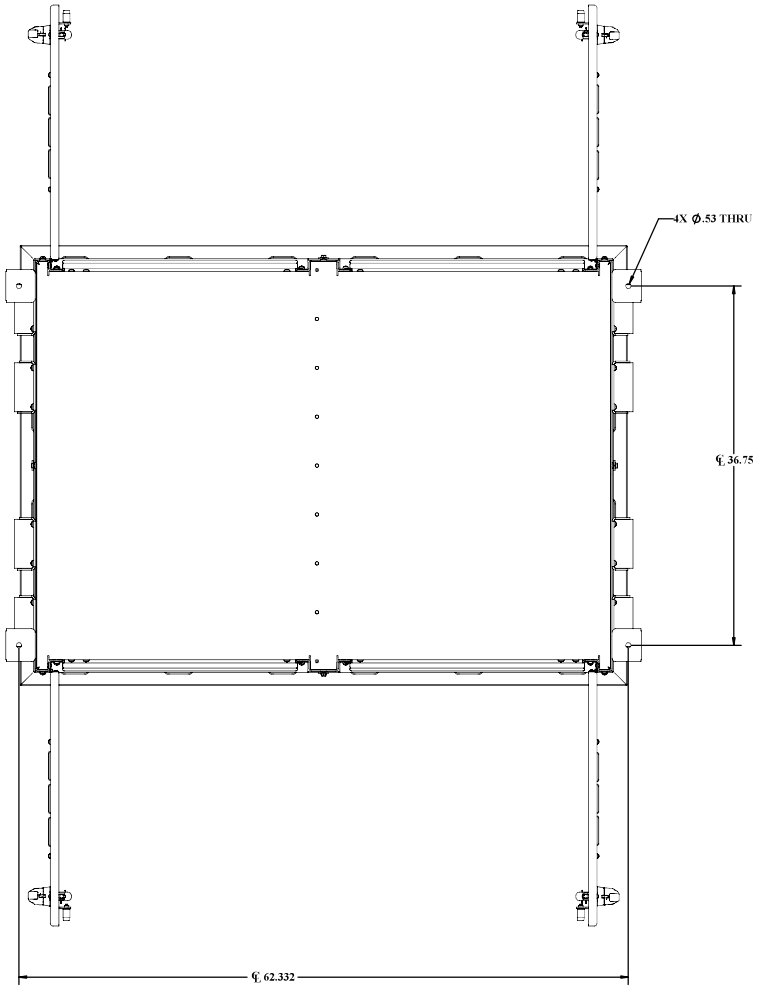

UNLESS OTHERWISE SPECIFIED:	DDB Unlimited Inc.			
DIMENSIONS ARE IN INCHES ANGULAR: ±1° FRACTIONAL: NO DECIMAL: ±1/16 TWO PLACE DECIMAL: ±.010 THREE PLACE DECIMAL: ±.005 ALL HOLES ±.003Ø	2OD-50DDX DWG, WEB, 2OD, 50, DDX2OD-50DDX			
	SIZE	Cage Code:	DWG. NO.:	REV
	D	3S5Y5	00965	B
MATERIAL: 5052-H32-0.125 ASTM B209-04	SCALE: 1:12	WEIGHT: 397 lbs.		SHEET 3 OF 3
PAINT: DIAMOND VOGEL, BEIGE GLOSS TEXTURE 874920				
DO NOT SCALE DRAWING				

DDB FORM 7.1-REV.K 08/02/17

UNCLASSIFIED PUBLIC

An ISO 9001 Certified company

2OD Series

2OD-62DXC

Made in America

Believing in American Craftsmanship

15 YEAR WARRANTY

Why Choose the 2OD Series?

When a single bay solution just isn't sufficient, the 2OD series enclosures are ideal. Constructed of our own rugged Alumiflex®, it is noticeably lighter than steel yet strong enough to rack the heaviest equipment. The 2OD-62DXC includes a number of standard features, such as an adjustable racking system with a versatile rail strut system (R-Strut), a 3-point locking system for security, a reversible rack system for 19" and 23" applications, lifting hooks for easy maneuvering into place, wind locks to secure doors safely when they are open, and our patented Alumishield® solar cap for managing heat loads. Furthermore, DDB offers an array of customizable choices, which include climate control (HVAC), electrical load panels, and cable entry solutions.

These possibilities combine to produce an enclosure that can be customized to meet the specific needs that your site and clients may require. The 2OD undoubtably closes the gap between single-bay enclosures and larger building "hut" solutions, giving you the flexibility to meet any need in the field without the required stamps or inspections that traditional "huts" do . With an industry-leading 15-year warranty on every enclosure, DDB provides cutting-edge design, competitive pricing, benchmark lead times, and guaranteed delivery. Whether you require a custom enclosure or something from our substantial stock, our professional staff is here to help you today.



Application Types

Telecommunications
Wireless/Broadband
Fiber Optics
Back Haul
Public Safety
Utility
Base Station
Military
Trailer-Based Communications
Wi-Fi
LTEE/4G/5G



Environmental & Safety Ratings:

- ✓ NEMA 3R (shown above)
- ✓ NEMA 4 and 4X configurable (not shown)

Features

15 Year Warranty
0.125" Aluminum Construction
3 Point Lock System
Heavy Duty Out-Door Construction
Front and Rear Access
Standard Lifting Hooks
Stainless Steel External Hardware/Hinge
Cream Powder-Coat, Standard
Quick Shipping

Weight and Dimensions

Approximate Exterior Enclosure Dimensions:
64”H x 65”W x 30”D
Shipping Dimensions:
84”W x 54"D x 72”H - Palletized
Approximate Shipping Weight:
451 lbs.

2301 S. HWY 77 Pauls Valley, OK 73075
T: (405)-665-2876
sales@ddbunlimited.com www.ddbunlimited.com

DDB UNLIMITED®

An ISO 9001 Certified company

2OD Series

2OD-62DXC

Made in America

Believing in American Craftsmanship

15 YEAR WARRANTY



Features

1. Alumishield
2. 19” and 23" Adjustable Racking Rails
3. 3 Point Locking System
4. Stainless Steel Door Hinge
5. Powder-Coat Cream
6. Wind Locks
7. Rear Door Access
8. Reusable Filters
9. Heavy Duty 0.160" Doors

Scan this code for Climate Control

Scan this code for Accessories

2301 S. HWY 77 Pauls Valley, OK 73075
T: (405)-665-2876
sales@ddbunlimited.com www.ddbunlimited.com

REVISIONS		
REV.	DESCRIPTION	DATE
A	Initial Release per DR-00966	5/28/2014
B	UPDATED TO 2017 WEBSITE FORMAT	8/9/2017
C	UPDAED FORMAT	11/24/2020

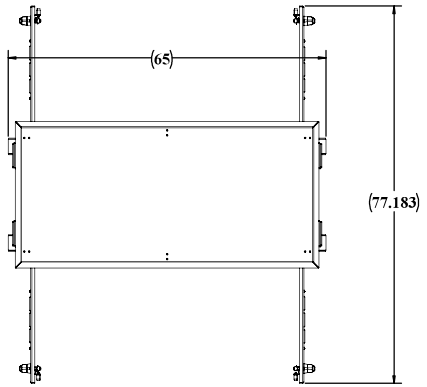

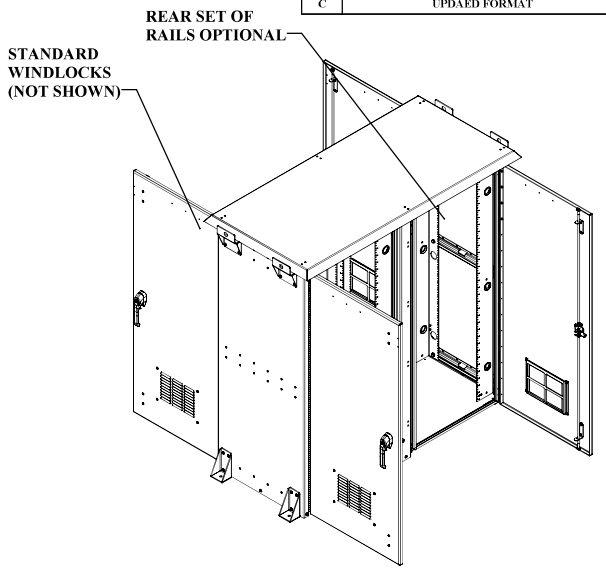

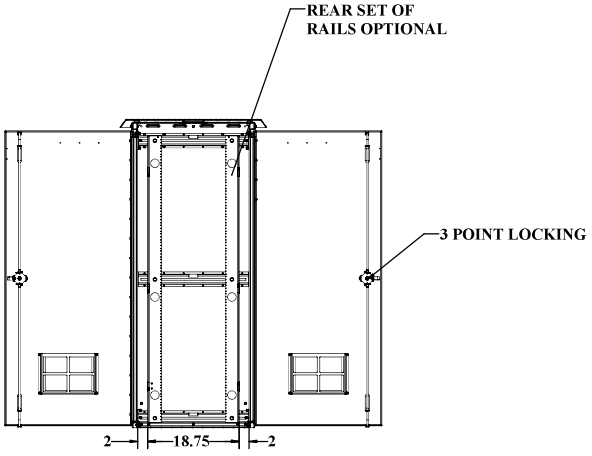

SECTION A-A
SCALE 1 : 12

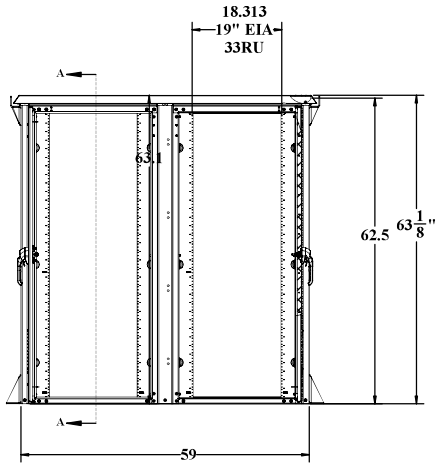

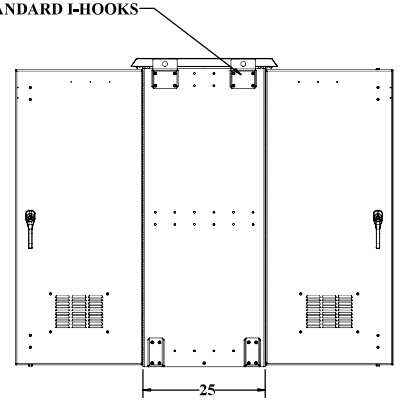

UNLESS OTHERWISE SPECIFIED:	DDB Unlimited Inc.		
DIMENSIONS ARE IN INCHES ANGULAR: FRACTIONAL:NO DECIMAL: ±1/32 TWO PLACE DECIMAL: ±.010 THREE PLACE DECIMAL: ±.005	2OD-62DX DWG, WEB, 2OD, 62, DX2OD-62DX		
	SIZE: D	Cage Code: 385Y5	DWG. NO.: 00966 REV: C
MATERIAL: 5052-H32-0.125 ASTM B209-04	SCALE: 1:8	WEIGHT: 353 lbs.	SHEET 1 OF 3
PAINT: DIAMOND VOGEL, BEIGE GLOSS TEXTURE 874920			
DO NOT SCALE DRAWING			

DDB FORM 7.1-REVXK 08/02/17

UNCLASSIFIED PUBLIC

File Location: (DDB)(EPDM Vault)
C:\DDB\DR Requests\Customers\DDB WEB DWG\2OD Family WEB\DR-00966 (2OD-62DX WEB

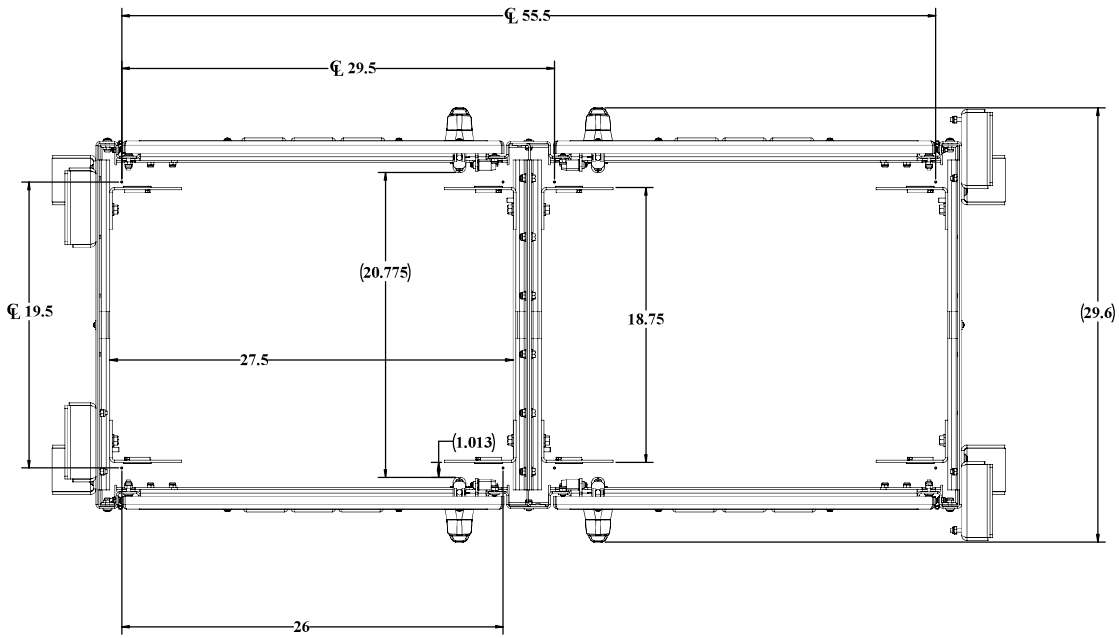

ALUMASHILD AND CEILING NOT SHOWN

UNLESS OTHERWISE SPECIFIED:	DDB Unlimited Inc.		
DIMENSIONS ARE IN INCHES ANGULAR: FRACTIONAL/NO DECIMAL: ±1/32 TWO PLACE DECIMAL: ±.010 THREE PLACE DECIMAL: ±.005	20D-62DX (CLOSED) DWG, WEB, 2OD, 62, DX		
	SIZE	Cage Code:	DWG. NO.:	REV
	D	3S5Y5	00966	C
MATERIAL: 5052-H32 0.125 ASTM B209-04	SCALE: 1:8	WEIGHT: 353 lbs.	SHEET 2 OF 3	
PAINT: DIAMOND VOGEL SEMI GLOSS ELECTRIC 154020				
DO NOT SCALE DRAWING				

DDB FORM 7.1-7 REV.K 08/02/17

UNCLASSIFIED PUBLIC

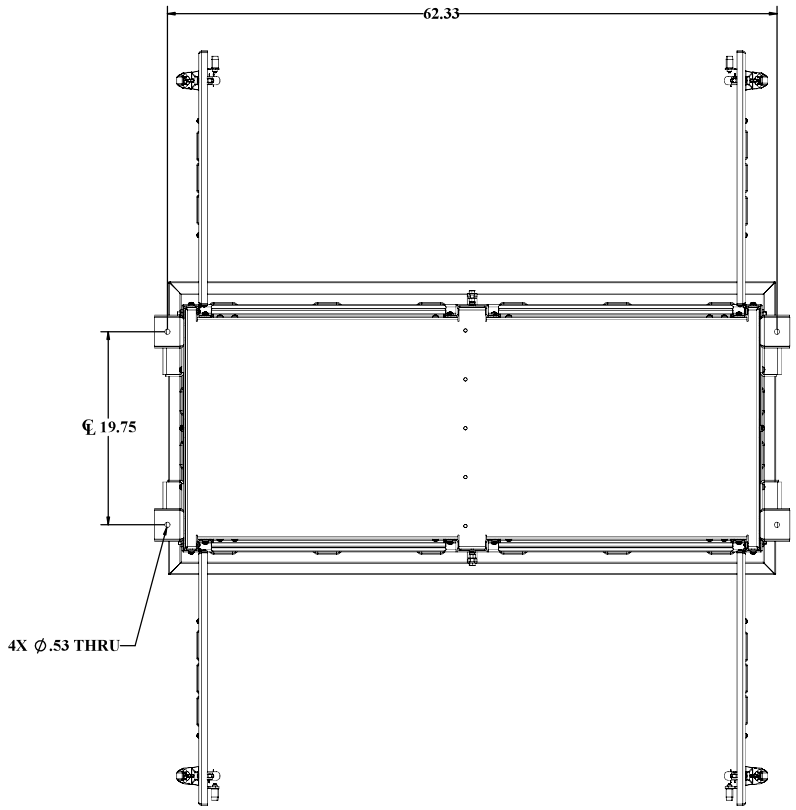

BOTTOM VIEW MOUNTING HOLES

UNLESS OTHERWISE SPECIFIED:	DDB Unlimited Inc.		
DIMENSIONS ARE IN INCHES ANGULAR: ±1° FRACTIONAL: NO DECIMAL: ±1/32 TWO PLACE DECIMAL: ±.010 THREE PLACE DECIMAL: ±.005 THREE PLACE DECIMAL: ±.0005 ALL HOLES ±.003Ø	2OD-62DX DWG, WEB, 2OD, 62, DX		
	SIZE: D	Cage Code: 385Y5	DWG. NO.: 00966 REV: C
MATERIAL: 5052-H32-0.125 ASTM B209-04	SCALE: 1:8	WEIGHT: 353 lbs.	SHEET 3 OF 3
PAINT: DIAMOND VOGEL SERIE GLOSS ELECTRIC ES4020			
DO NOT SCALE DRAWING			

DDB FORM 7.1-REV.K 08/02/17

UNCLASSIFIED PUBLIC

File Location: (DDB)(EPDM Vault)
C:\DDB\DR Requests\Customers\DDB WEB DWG\2OD Family WEB\DR-00966 (2OD-62DX WEB

DDB UNLIMITED®

An ISO 9001 Certified company

2OD Series

2OD-62DDC

Made in America

Believing in American Craftsmanship

15 YEAR WARRANTY

Why Choose the 2OD Series?

When a single bay solution just isn't sufficient, the 2OD series enclosures are ideal. Constructed of our own rugged Alumiflex®, it is noticeably lighter than steel yet strong enough to rack the heaviest equipment. The 2OD-62DDC includes a number of standard features, such as an adjustable racking system with a versatile rail strut system (R-Strut), a 3-point locking system for security, a reversible rack system for 19" and 23" applications, lifting hooks for easy maneuvering into place, wind locks to secure doors safely when they are open, and our patented Alumishield® solar cap for managing heat loads. Furthermore, DDB offers an array of customizable choices, which include climate control (HVAC), electrical load panels, and cable entry solutions. These possibilities combine to produce an enclosure that can be customized to meet the specific needs that your site and clients may require. The 2OD undoubtably closes the gap between single-bay enclosures and larger building "hut" solutions, giving you the flexibility to meet any need in the field without the required stamps or inspections that traditional "huts" do . With an industry-leading 15-year warranty on every enclosure, DDB provides cutting-edge design, competitive pricing, benchmark lead times, and guaranteed delivery. Whether you require a custom enclosure or something from our substantial stock, our professional staff is here to help you today.



Application Types

Telecommunications
Wireless/Broadband
Fiber Optics
Back Haul
Public Safety
Utility
Base Station
Military
Trailer-Based Communications
Wi-Fi
LTEE/4G/5G



Environmental & Safety Ratings:

- ✓ NEMA 3R (shown above)
- ✓ NEMA 4 and 4X configurable (not shown)

Features

15 Year Warranty
0.125" Aluminum Construction
3 Point Lock System
Heavy Duty Out-Door Construction
Front and Rear Access
Standard Lifting Hooks
Stainless Steel External Hardware/Hinge
Cream Powder-Coat, Standard
Quick Shipping

Weight and Dimensions

Approximate Exterior Enclosure Dimensions:
64”H x 65”W x 39”D
Shipping Dimensions:
72"L x 84”W x 54"D - Palletized
Approximate Shipping Weight:
513 lbs

2301 S. HWY 77 Pauls Valley, OK 73075
T: (405)-665-2876
sales@ddbunlimited.com www.ddbunlimited.com

DDB UNLIMITED®

An ISO 9001 Certified company

2OD Series

2OD-62DDC

Made in America

Believing in American Craftsmanship

15 YEAR WARRANTY



Features

1. Alumishield
2. 19” and 23” Adjustable Racking Rails
3. 3 Point Locking System
4. Stainless Steel Door Hinge
5. Powder-Coat Cream
6. Wind Lock
7. Rear Access Door
8. Reusable Filter
9. Heavy Duty 0.160” Doors

2301 S. HWY 77 Pauls Valley, OK 73075
T: (405)-665-2876
sales@ddbunlimited.com www.ddbunlimited.com

Scan this code for Climate Control

Scan this code for Accessories

REVISIONS		
REV.	DESCRIPTION	DATE
A	Initial Release per DR-00967	5/28/2014
B	UPDATED TO 2017 WEBSITE FORMAT	8/9/2017
C	NEW FORMAT	11/24/2020

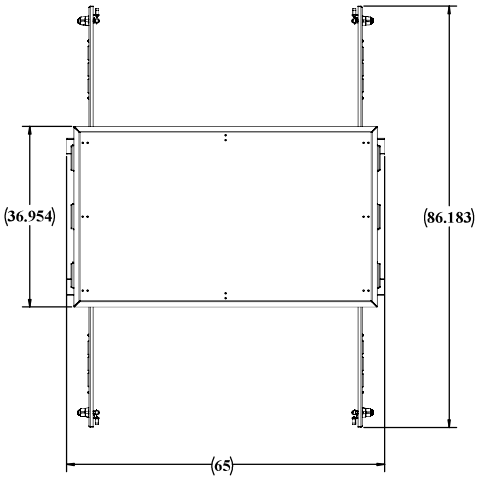

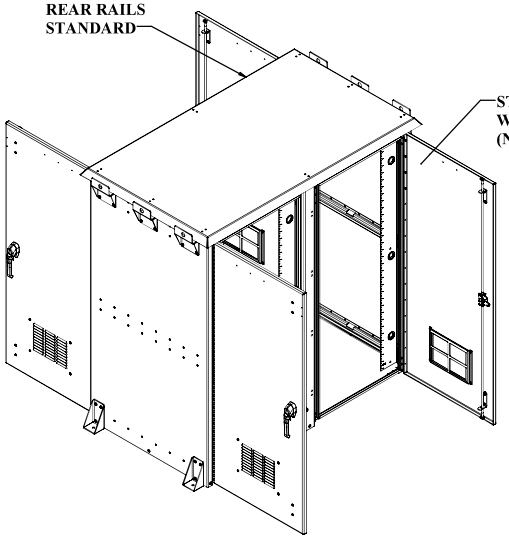

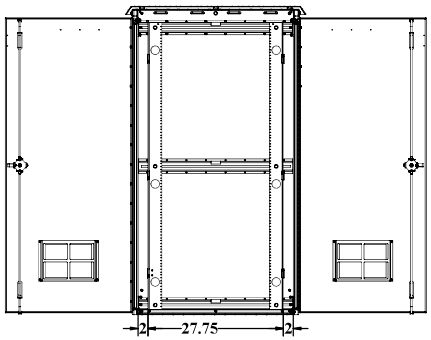

SECTION A-A
SCALE 1 : 12

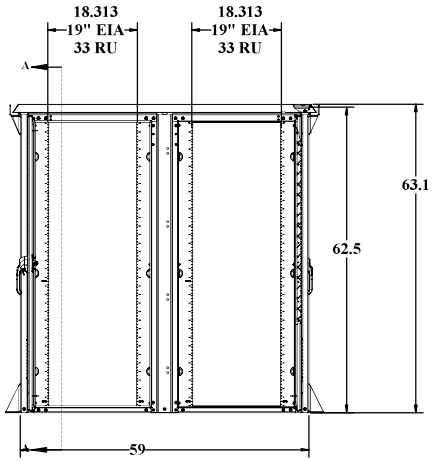

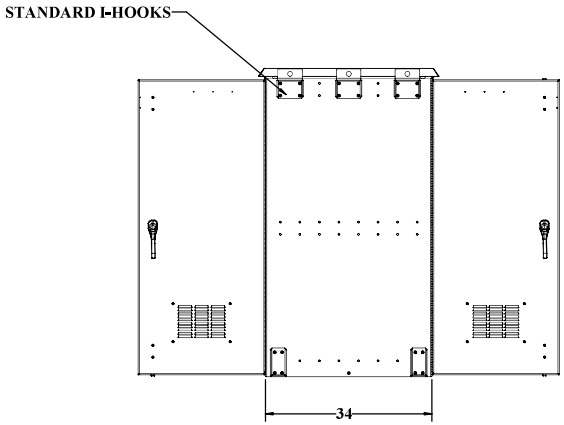

UNLESS OTHERWISE SPECIFIED:	DDB Unlimited Inc.		
DIMENSIONS ARE IN INCHES ANGULAR: ±1° FRACTIONAL: NO DECIMAL: ±1/16 TWO PLACE DECIMAL: ±.010 TWO PLACE DECIMAL: ±.0100 THREE PLACE DECIMAL: ±.0100 ALL HOLES ±.003Ø	2OD-62DD DWG, WEB, 2OD.62, DD2OD-62DD		
	SIZE: D	Cage Code: 385Y5	DWG. NO.: 00967 REV: C
MATERIAL: 5052-H32-0.125 ASTM B209-04	SCALE: 1:8	WEIGHT: 408 lbs.	SHEET 1 OF 3
PAINT: DIAMOND VOGEL, BEIGE GLOSS TEXTURE 874920			
DO NOT SCALE DRAWING			

DDB FORM 7.1-REV.K 08/02/17

UNCLASSIFIED PUBLIC

File Location: (DDB) (EPDM Vault)
C:\DDB\DR Requests\Customers\DDB WEB DWG\2OD Family WEB\DR-00967 (2OD-62DD WEB

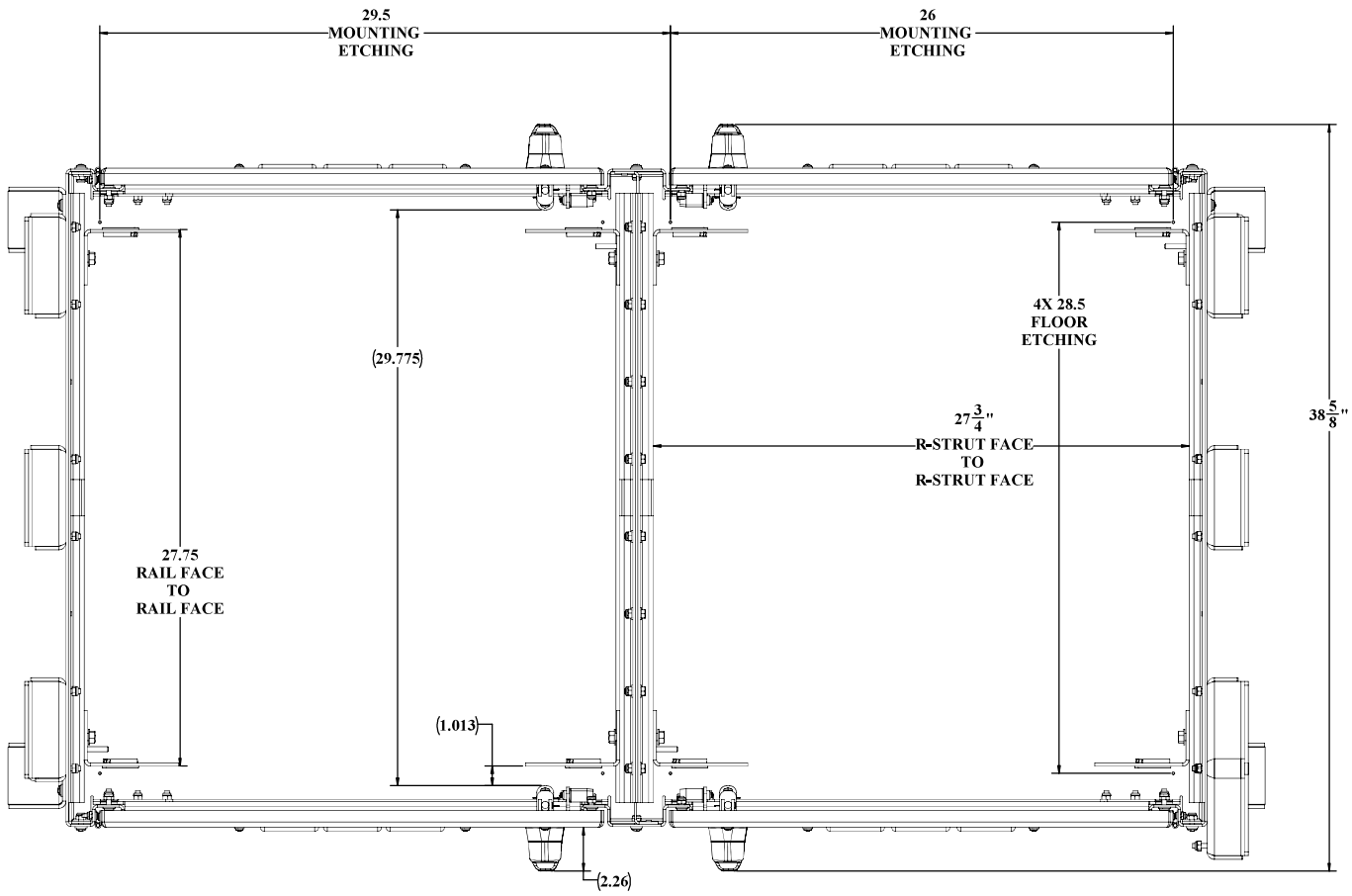

ALUMASHIELD AND CEILING NOT SHOWN

UNLESS OTHERWISE SPECIFIED:	**DDB Unlimited Inc.**
DIMENSIONS ARE IN INCHES	20D-30DD (CLOSED)
ANGULAR: ±1°	DWG, WEB, 20D, 30, DD20D-30DD (CLOSED)
FRACTIONAL NO DECIMAL: ±1/16	
TWO PLACE DECIMAL: ±.010	
THREE PLACE DECIMAL: ±.005	
ALL HOLES ⌀ unless ⌀	SIZE: D | Cage Code: 38SY5 | DWG. NO.: 00967 | REV: C
MATERIAL: 5052-H32 0.125 ASTM B209-04	SCALE: 1:8 | WEIGHT: 272 lbs. | SHEET 2 OF 3
PAINT: DIAMOND VOGEL, RIDGE GLOSS TEXTURE 874920	
DO NOT SCALE DRAWING	

DDB FORM 7.1-REV.K 08/02/17

UNCLASSIFIED PUBLIC

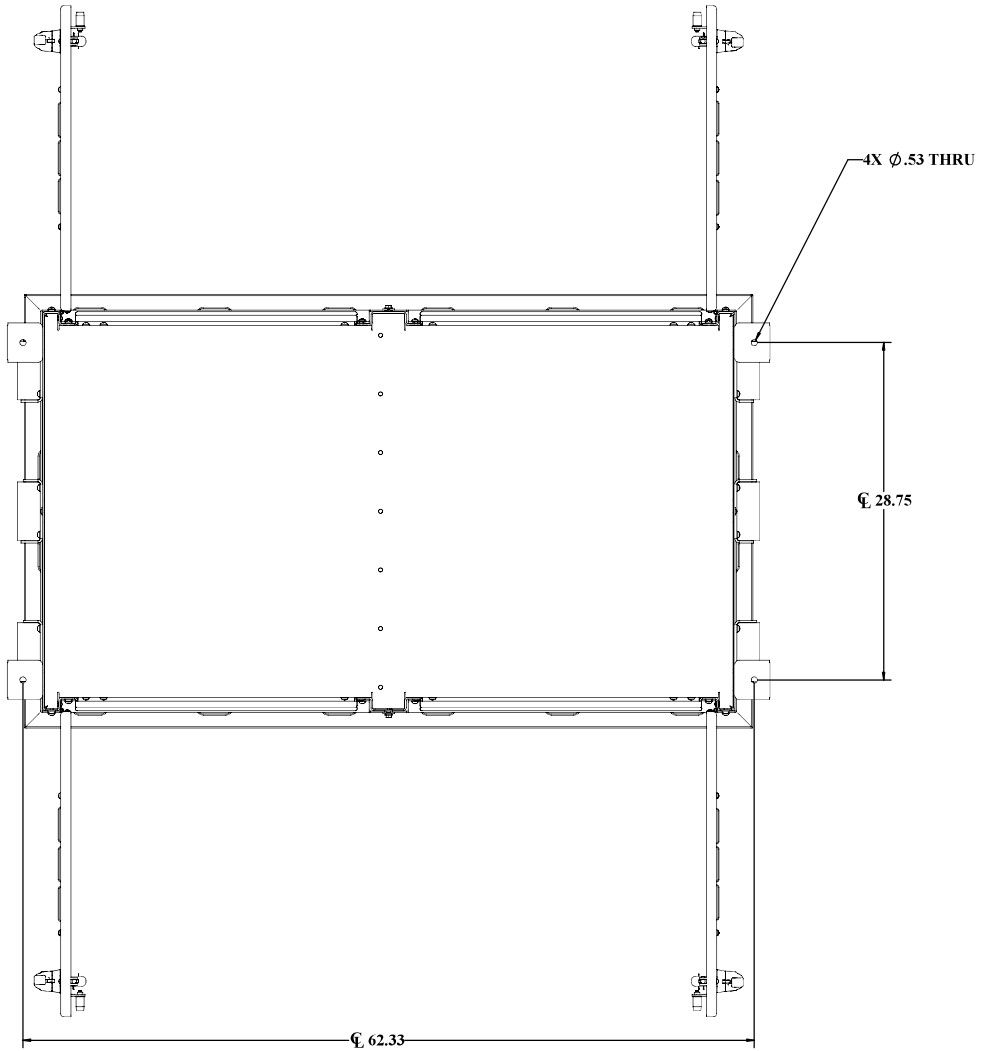

MOUNTING LOCATIONS

UNLESS OTHERWISE SPECIFIED:	DDB Unlimited Inc.			
DIMENSIONS ARE IN INCHES ANGULAR: FRACTIONAL: NO DECIMAL: TWO PLACE DECIMAL: THREE PLACE DECIMAL: ALL HOLES ⌀ unless ⌀		2OD-62DD		
		DWG, WEB, 2OD.62, DD2OD-62DD		
	SIZE	Cage Code:	DWG. NO.:	REV
	D	385Y5	00967	C
MATERIAL: 5052-H32-0.125 ASTM B209-04	SCALE: 1:8	WEIGHT: 408 lbs.		SHEET 3 OF 3
PAINT: DIAMOND VOGEL, RIDGE GLOSS TEXTURE 874920				
DO NOT SCALE DRAWING				

UNCLASSIFIED PUBLIC

File Location: (DDB) (EPDM Vault)
C:\DDB\DR Requests\Customers\DDB WEB DWG\2OD Family WEB\DR-00967 (2OD-62DD WEB

DDB FORM 7.1-REV.K 08/02/17

DDB UNLIMITED®

An ISO 9001 Certified company

2OD Series

2OD-62DDXC

Made in America

Believing in American Craftsmanship

15 YEAR WARRANTY

Why Choose the 2OD Series?

When a single bay solution just isn't sufficient, the 2OD series enclosures are ideal. Constructed of our own rugged Alumiflex®, it is noticeably lighter than steel yet strong enough to rack the heaviest equipment. The 2OD-62DDXC includes a number of standard features, such as an adjustable racking system with a versatile rail strut system (R-Strut), a 3-point locking system for security, a reversible rack system for 19" and 23" applications, lifting hooks for easy maneuvering into place, wind locks to secure doors safely when they are open, and our patented Alumishield® solar cap for managing heat loads. Furthermore, DDB offers an array of customizable choices, which include climate control (HVAC), electrical load panels, and cable entry solutions. These possibilities combine to produce an enclosure that can be customized to meet the specific needs that your site and clients may require. The 2OD undoubtably closes the gap between single-bay enclosures and larger building "hut" solutions, giving you the flexibility to meet any need in the field without the required stamps or inspections that traditional "huts" do . With an industry-leading 15-year warranty on every enclosure, DDB provides cutting-edge design, competitive pricing, benchmark lead times, and guaranteed delivery. Whether you require a custom enclosure or something from our substantial stock, our professional staff is here to help you today.



Application Types

Telecommunications
Wireless/Broadband
Fiber Optics
Back Haul
Public Safety
Utility
Base Station
Military
Trailer-Based Communications
Wi-Fi
LTEE/4G/5G



Environmental & Safety Ratings:

- ✓ NEMA 3R (shown above)
- ✓ NEMA 4 and 4X configurable (not shown)

Features

15 Year Warranty
0.125" Aluminum Construction
3 Point Lock System
Heavy Duty Out-Door Construction
Front and Rear Access
Standard Lifting Hooks
Stainless Steel External Hardware/Hinge
Cream Powder-Coat, Standard
Quick Shipping

Weight and Dimensions

Approximate Exterior Enclosure Dimensions:
64”H x 65”W x 47”D
Shipping Dimensions:
72"L x 84”W x 54”D – Palletized
Approximate Shipping Weight:
568 lbs.

2301 S. HWY 77 Pauls Valley, OK 73075
T: (405)-665-2876
sales@ddbunlimited.com www.ddbunlimited.com

DDB UNLIMITED®

An ISO 9001 Certified company

2OD Series

2OD-62DDXC

Made in America

Believing in American Craftsmanship

15 YEAR WARRANTY



Features

1. Alumishield
2. 19” and 23” Adjustable Racking Rails
3. 3 Point Locking System
4. Stainless Steel Door Hinge
5. Powder-Coat Cream
6. Wind Locks
7. Rear Access Door
8. Reusable Filters
9. Heavy Duty 0.160” Doors

2301 S. HWY 77 Pauls Valley, OK 73075

T: (405)-665-2876

sales@ddbunlimited.com www.ddbunlimited.com

Scan this code for Climate Control

Scan this code for Accessories

REVISIONS		
REV.	DESCRIPTION	DATE
A	Initial Release per DR-00968	5/28/2014
B	UPDATE TO NEW FORMAT	11/24/2020

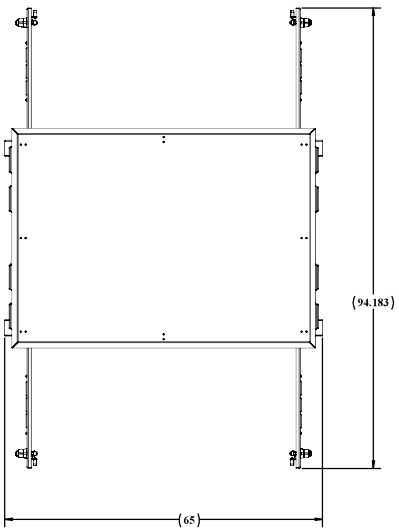

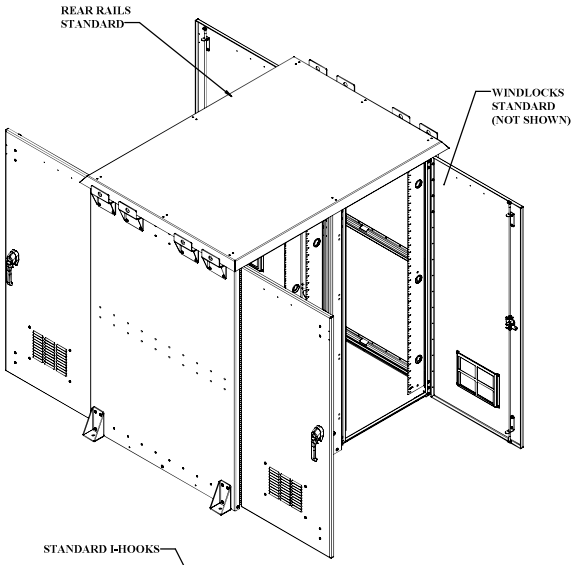

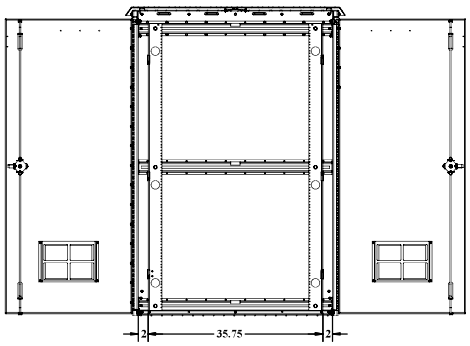

SECTION A-A
SCALE 1 : 12

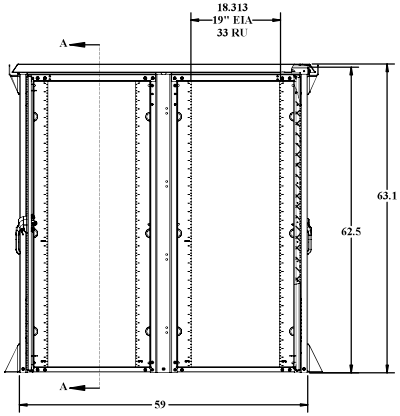

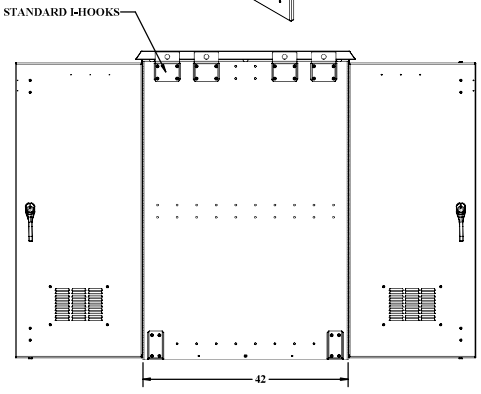

UNLESS OTHERWISE SPECIFIED:	DDB Unlimited Inc.		
DIMENSIONS ARE IN INCHES ANGULAR: ±1° FRACTIONAL: ±1/64 TWO PLACE DECIMAL: ±.010 THREE PLACE DECIMAL: ±.005 ALL HOLES ⌀.005Ⓜ	20D+62DDX DWG, WEB, 20D, 62, DDX20D+62DDX		
	SIZE: D	Cage Code: 385Y5	DWG. NO.: 00968 REV: B
MATERIAL: 5052-H32-0.125 ASTM B209-04	SCALE: 1:8	WEIGHT: 446 lbs.	SHEET 1 OF 3
PAINT: DIAMOND VOGEL, BEIGE GLOSS TEXTURE 874920			
DO NOT SCALE DRAWING			

DDB FORM 7.1-REV.K 08/03/17

UNCLASSIFIED PUBLIC

File Location: (DDB) (EPDM Vault)
C:\DDB\DR Requests\Customers\DDB WEB DWG\20D Family WEB\DR-00968 (20D-62DDX WEB

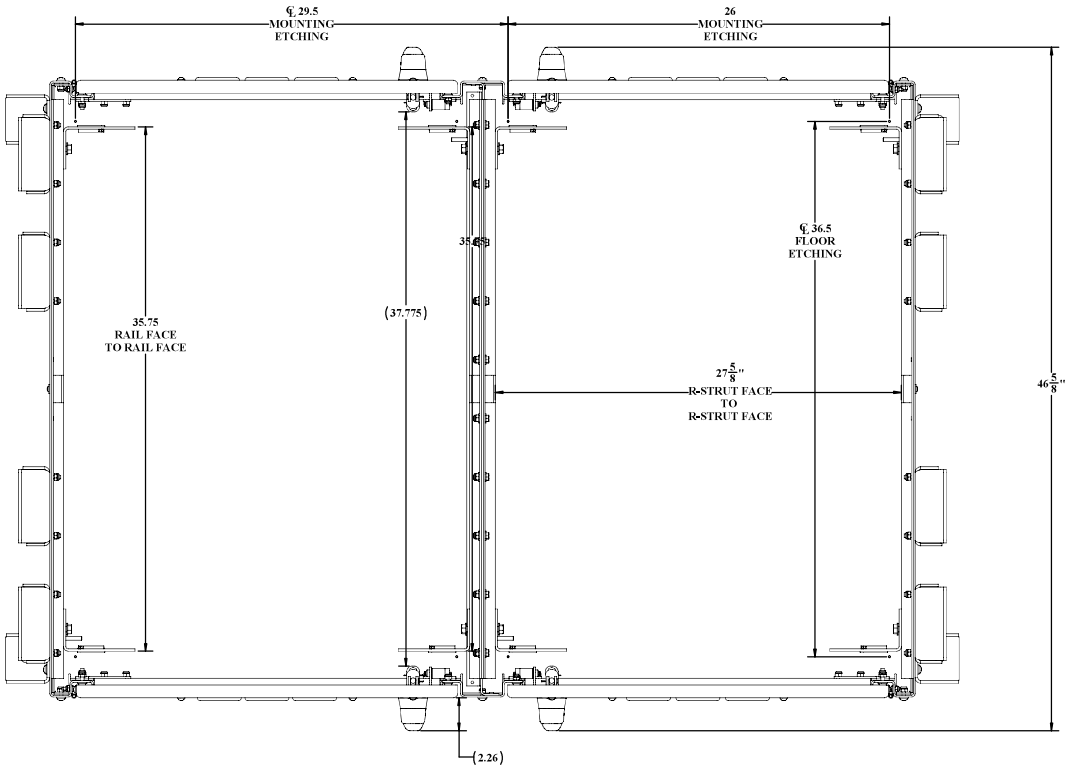

TOP VIEW CEILING AND SOLAR SHIELD NOT SHOWN

UNLESS OTHERWISE SPECIFIED:	***DDB Unlimited Inc.***
DIMENSIONS ARE IN INCHES ANGULAR: ±1° FRACTIONAL: NO DECIMAL: ±1/16 TWO PLACE DECIMAL: ±.010 THREE PLACE DECIMAL: ±.005 ALL HOLES ⌀.005Ⓜ	20D-30DDX-CLOSED DWG, WEB, 20D, 30, DDX20D-30DDX-CLOSED
MATERIAL: 5052-H32-0.125 ASTM B209-04	SIZE: D | Cage Code: 3S5Y5 | DWG. NO.: 00968 | REV: B
PAINT: DIAMOND VOGEL, RIDGE GLOSS TEXTURE ET4920	SCALE: 1:8 | WEIGHT: 303 lbs. | SHEET 2 OF 3
DO NOT SCALE DRAWING	

DDB FORM 7.1-REV.K 08/02/17

UNCLASSIFIED PUBLIC

File Location: (DDB) EPDM Vault
C:\DDB\DR Requests\Customers\DDB WEB DWG\20D Family WEB\DR-00968 (20D-62DDX WEB

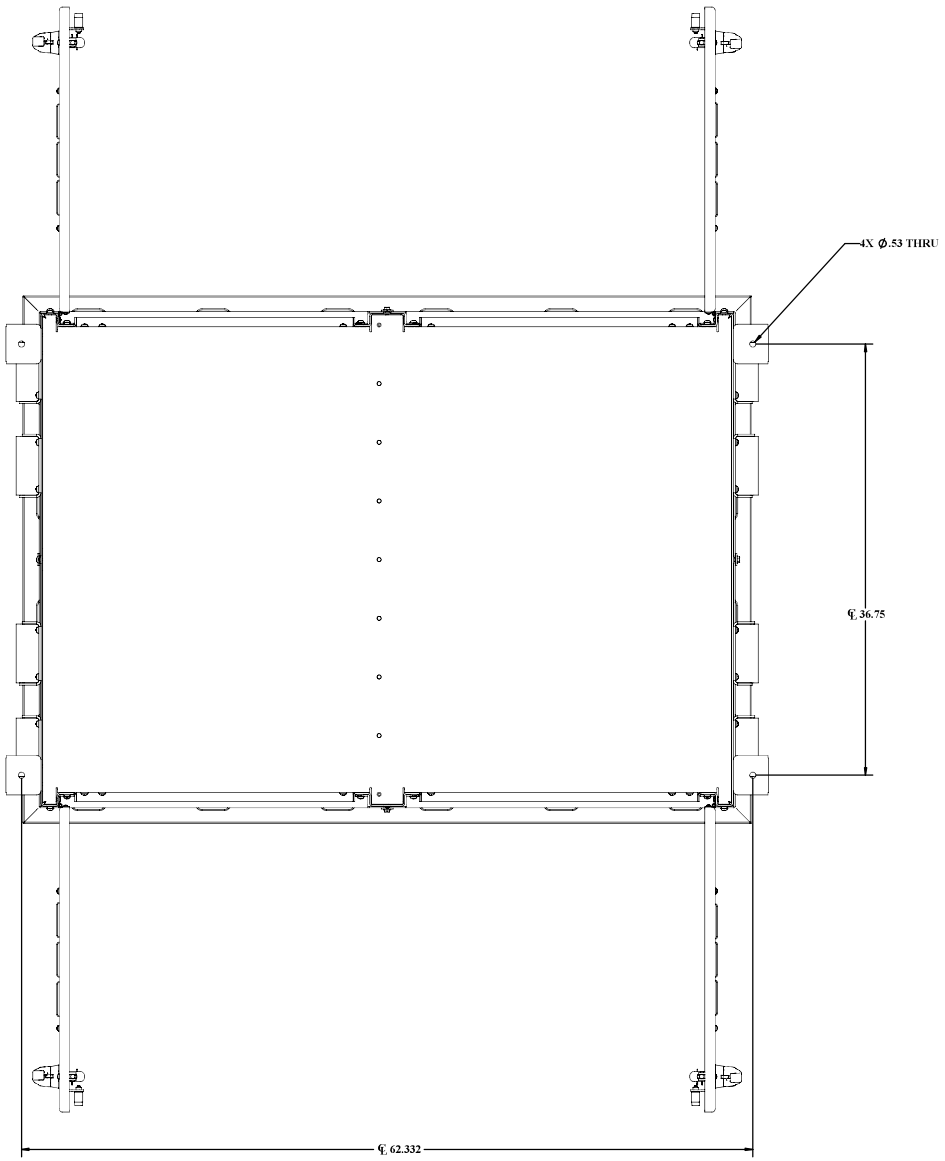

BOTTOM VIEW SHOWN MOUNTING LOCATIONS

UNLESS OTHERWISE SPECIFIED:	**DDB Unlimited Inc.**
DIMENSIONS ARE IN INCHES ANGULAR: ±1° FRACTIONAL: ±1/32 TWO PLACE DECIMAL: ±.010 THREE PLACE DECIMAL: ±.005 ALL HOLES ⌀±.003Ⓜ	20D+62DDX DWG, WEB, 20D, 62, DDX20D+62DDX
SIZE: D	Cage Code: 385Y5
DWG. NO.: 00968	REV: B
SCALE: 1:8	WEIGHT: 446 lbs.
SHEET 3 OF 3	
MATERIAL: 50T-24ETI-0 I2P ASTM B209-04	
PAINT: DIAMOND VOGEL, RIDGE GLOSS TEXTURE 874920	
DO NOT SCALE DRAWING	

DDB FORM 7.1-7 REV.K 08/02/17

UNCLASSIFIED PUBLIC

An ISO 9001 Certified company

2OD Series

2OD-78DXC

Made in America

Believing in American Craftsmanship

15 YEAR WARRANTY

Why Choose the 2OD Series?

When a single bay solution just isn't sufficient, the 2OD series enclosures are ideal. Constructed of our own rugged Alumiflex®, it is noticeably lighter than steel yet strong enough to rack the heaviest equipment. The 2OD-78DXC includes a number of standard features, such as an adjustable racking system with a versatile rail strut system (R-Strut), a 3-point locking system for security, a reversible rack system for 19" and 23" applications, lifting hooks for easy maneuvering into place, wind locks to secure doors safely when they are open, and our patented Alumishield® solar cap for managing heat loads. Furthermore, DDB offers an array of customizable choices, which include climate control (HVAC), electrical load panels, and cable entry solutions. These possibilities combine to produce an enclosure that can be customized to meet the specific needs that your site and clients may require. The 2OD undoubtably closes the gap between single-bay enclosures and larger building "hut" solutions, giving you the flexibility to meet any need in the field without the required stamps or inspections that traditional "huts" do . With an industry-leading 15-year warranty on every enclosure, DDB provides cutting-edge design, competitive pricing, benchmark lead times, and guaranteed delivery. Whether you require a custom enclosure or something from our substantial stock, our professional staff is here to help you today.



Features

15 Year Warranty

0.125" Aluminum Construction

3 Point Lock System

Heavy Duty Out-Door Construction

Front and Rear Access

Standard Lifting Hooks

Stainless Steel External Hardware/Hinge

Cream Powder-Coat, Standard

Quick Shipping

Application Types

Telecommunications
Wireless/Broadband
Fiber Optics
Back Haul
Public Safety
Utility
Base Station
Military
Trailer-Based Communications
Wi-Fi
LTEE/4G/5G



Environmental & Safety Ratings:

- ✓ NEMA 3R (shown above)
- ✓ NEMA 4 and 4X configurable (not shown)

Weight and Dimensions

Approximate Exterior Enclosure Dimensions:

79”H x 65”W x 30”D

Shipping Dimensions:

54"D x 84”W x 84”H - Palletized

Approximate Shipping Weight:

500 lbs.

2301 S. HWY 77 Pauls Valley, OK 73075
T: (405)-665-2876
sales@ddbunlimited.com www.ddbunlimited.com

DDB UNLIMITED®

An ISO 9001 Certified company

2OD Series

2OD-78DXC

Made in America

Believing in American Craftsmanship

15 YEAR WARRANTY



Features

1. Alumishield
2. 19” and 23" Adjustable Racking Rails
3. 3 Point Locking System
4. Stainless Steel Door Hinge
5. Powder-Coat Cream
6. Wind Locks
7. Rear Door Access
8. Reusable Filters
9. Heavy Duty 0.160" Doors

Scan this code for Climate Control

Scan this code for Accessories

2301 S. HWY 77 Pauls Valley, OK 73075
T: (405)-665-2876
sales@ddbunlimited.com www.ddbunlimited.com

REVISIONS		
REV.	DESCRIPTION	DATE
A	Initial Release per DR-00969	5/28/2014
B	UPDATED TO 2017 WEBSITE FORMAT	8/9/2017
C	UPDATED NEW FORMAT	11/25/2020

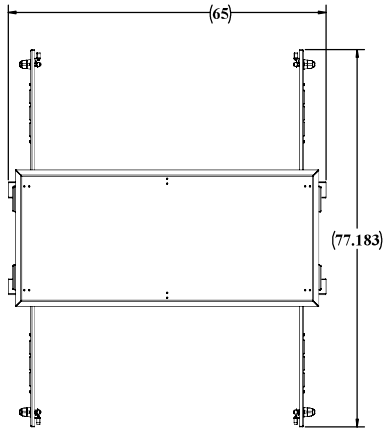

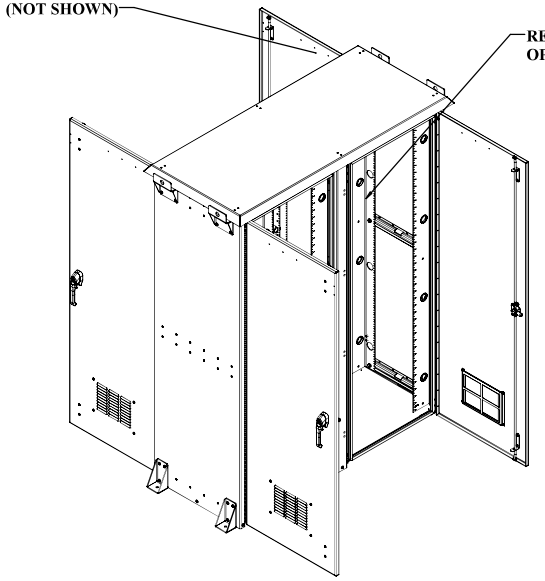

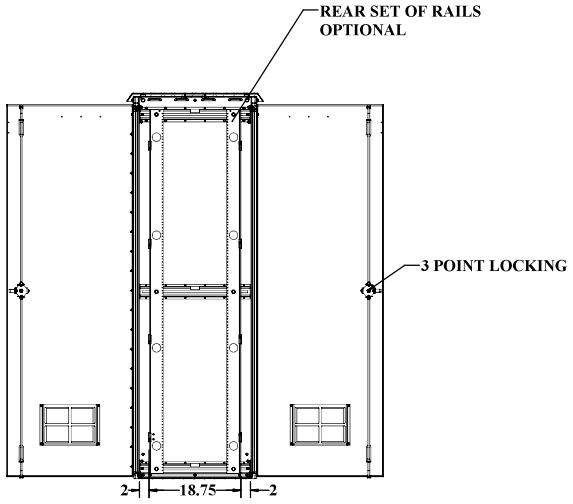

SECTION A-A
SCALE 1 : 12

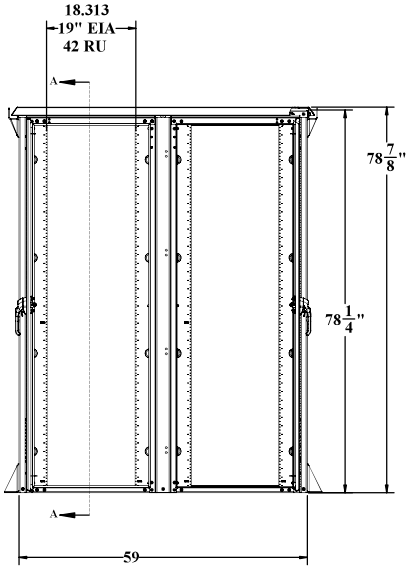

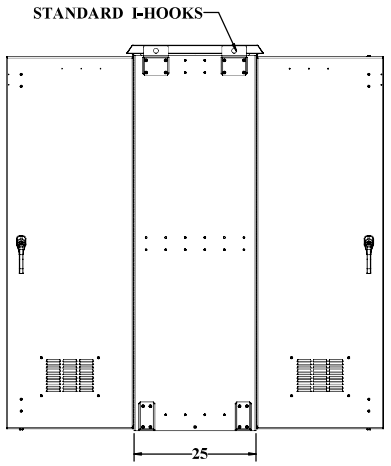

UNLESS OTHERWISE SPECIFIED:	DDB Unlimited Inc.		
DIMENSIONS ARE IN INCHES ANGULAR: ±1° FRACTIONAL: ±1/64 DECIMAL: ±.010 TWO PLACE DECIMAL: ±.010 THREE PLACE DECIMAL: ±.005 ALL HOLES ⌀	2OD-78DX DWG, WEB, 2OD, 78, DX		
	SIZE: D	Cage Code: 385Y5	DWG. NO.: 00969 REV: C
MATERIAL: 5052-H32 0.125 ASTM B209-04	SCALE: 1:8	WEIGHT: 412 lbs.	SHEET 1 OF 3
PAINT: DIAMOND VOGEL, BEIGE GLOSS TEXTURE 874920			
DO NOT SCALE DRAWING			

DDB FORM 7.1-7 REV.K 08/02/17

UNCLASSIFIED PUBLIC

File Location: (DDB)(EPDM Vault)
C:\DDB\DR Requests\Customers\DDB WEB DWG\2OD Family WEB\DR-00969 (2OD-78DX WEB

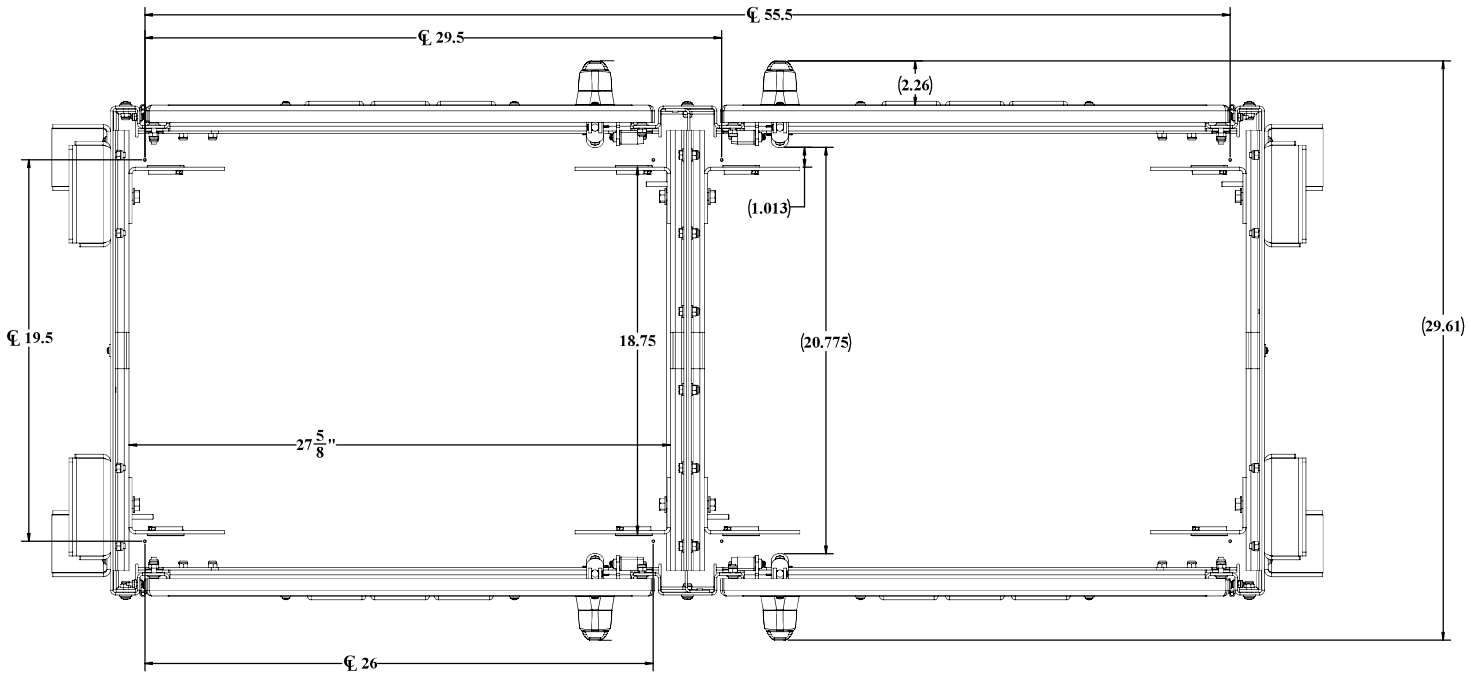

ALUMASHIELD AND CEILING NOT SHOWN

UNLESS OTHERWISE SPECIFIED:	DDB Unlimited Inc.		
DIMENSIONS ARE IN INCHES ANGULAR: ±1° FRACTIONAL: NO DECIMAL: ±1/16 TWO PLACE DECIMAL: ±.010 THREE PLACE DECIMAL: ±.005 ALL HOLES ±.003	DOORS CLOSED		
	SIZE: D	Cage Code: 385Y5	DWG. NO.: 00969 REV: C
MATERIAL: 5052-H32 0.125 ASTM B209-04	SCALE: 1:8	WEIGHT: 225 lbs.	SHEET 2 OF 3
PAINT: DIAMOND VOGEL SEMI GLOSS ELECTRIC E54650			
DO NOT SCALE DRAWING			

DDB FORM 7.1-7 REV.K 08/02/17

UNCLASSIFIED PUBLIC

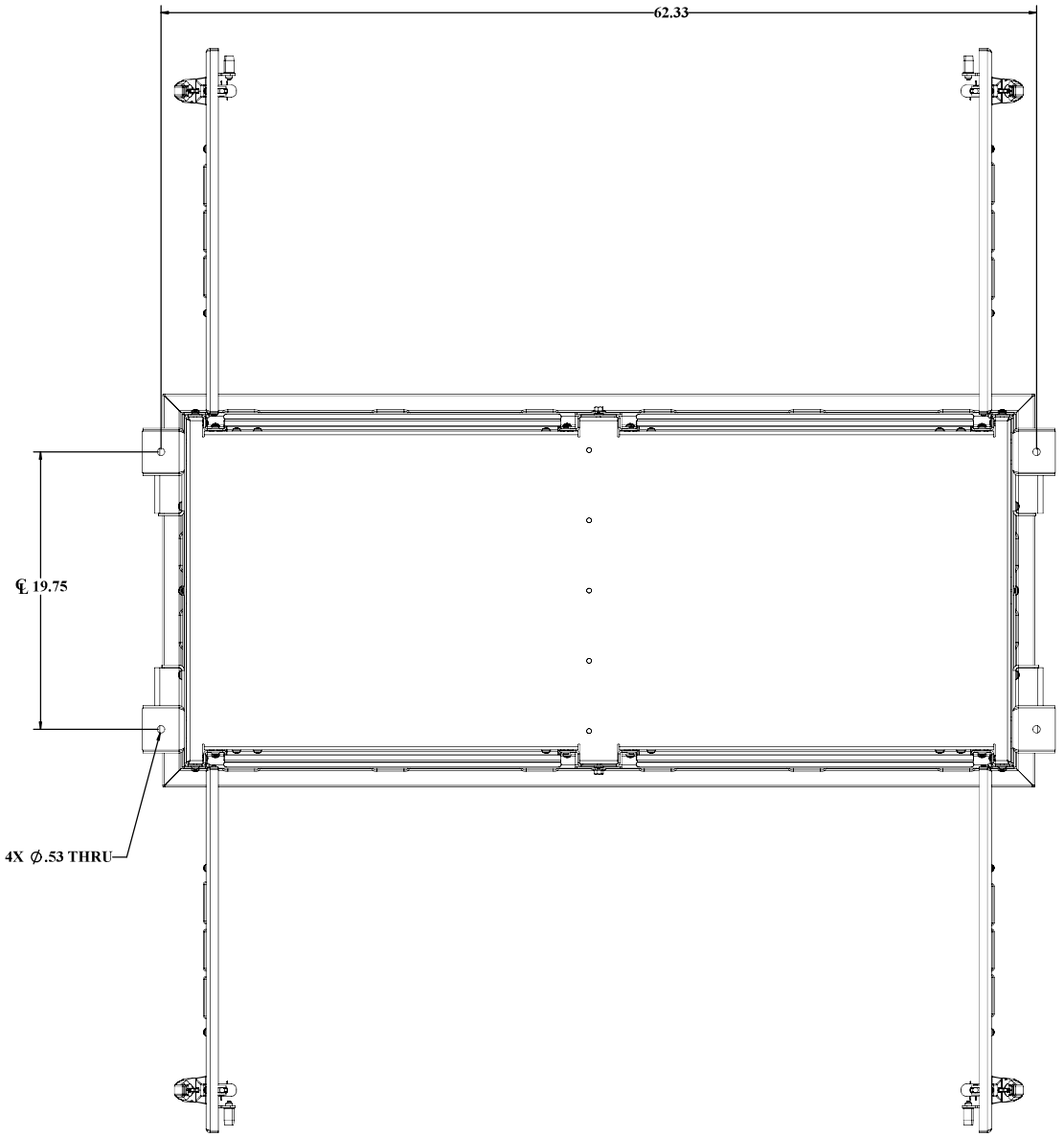

BOTTOM VIEW MOUNTING HOLES

UNLESS OTHERWISE SPECIFIED:	DDB Unlimited Inc.		
DIMENSIONS ARE IN INCHES ANGULAR: ±1° FRACTIONAL: ±1/32 TWO PLACE DECIMAL: ±.010 THREE PLACE DECIMAL: ±.005 ALL EDGES ⌀.010	2OD-78DX DWG, WEB, 2OD, 78, DX2OD-78DX		
	SIZE: D	Cage Code: 385Y5	DWG. NO.: 00969 REV: C
MATERIAL: 5052-H32-0.125 ASTM B209-04			
PAINT: DIAMOND VOGEL SERIE GLOSS ELECTRIC 154020	SCALE: 1:8	WEIGHT: 412 lbs.	SHEET 3 OF 3
DO NOT SCALE DRAWING			

DDB FORM 7.1-7 REV.K 08/02/17

UNCLASSIFIED PUBLIC

An ISO 9001 Certified company

2OD Series

2OD-78DDC

Made in America

Believing in American Craftsmanship

15 YEAR WARRANTY

Why Choose the 2OD Series?

When a single bay solution just isn't sufficient, the 2OD series enclosures are ideal. Constructed of our own rugged Alumiflex®, it is noticeably lighter than steel yet strong enough to rack the heaviest equipment. The 2OD-78DDC includes a number of standard features, such as an adjustable racking system with a versatile rail strut system (R-Strut), a 3-point locking system for security, a reversible rack system for 19" and 23" applications, lifting hooks for easy maneuvering into place, wind locks to secure doors safely when they are open, and our patented Alumishield® solar cap for managing heat loads. Furthermore, DDB offers an array of customizable choices, which include climate control (HVAC), electrical load panels, and cable entry solutions. These possibilities combine to produce an enclosure that can be customized to meet the specific needs that your site and clients may require. The 2OD undoubtably closes the gap between single-bay enclosures and larger building "hut" solutions, giving you the flexibility to meet any need in the field without the required stamps or inspections that traditional "huts" do . With an industry-leading 15-year warranty on every enclosure, DDB provides cutting-edge design, competitive pricing, benchmark lead times, and guaranteed delivery. Whether you require a custom enclosure or something from our substantial stock, our professional staff is here to help you today.



Application Types

Telecommunications
Wireless/Broadband
Fiber Optics
Back Haul
Public Safety
Utility
Base Station
Military
Trailer-Based Communications
Wi-Fi
LTEE/4G/5G



Environmental & Safety Ratings:

- ✓ NEMA 3R (shown above)
- ✓ NEMA 4 and 4X configurable (not shown)

Features

15 Year Warranty
0.125" Aluminum Construction
3 Point Lock System
Heavy Duty Out-Door Construction
Front and Rear Access
Standard Lifting Hooks
Stainless Steel External Hardware/Hinge
Cream Powder-Coat, Standard
Quick Shipping

Weight and Dimensions

Approximate Exterior Enclosure Dimensions:
79”H x 65”W x 39”D
Shipping Dimensions:
54“D x 84”W x 84”H - Palletized
Approximate Shipping Weight:
577 lbs.

2301 S. HWY 77 Pauls Valley, OK 73075
T: (405)-665-2876
sales@ddbunlimited.com www.ddbunlimited.com

DDB UNLIMITED®

An ISO 9001 Certified company

2OD Series

2OD-78DDC

Made in America

Believing in American Craftsmanship

15 YEAR WARRANTY



Features

1. Alumishield
2. 19” and 23”Adjustable Racking Rails
3. 3 Point Locking System
4. Stainless Steel Door Hinge
5. Powder-Coat Cream
6. Wind Locks
7. Rear Door Access
8. Reusable Filters
9. Heavy Duty 0.160” Doors

2301 S. HWY 77 Pauls Valley, OK 73075
T: (405)-665-2876
sales@ddbunlimited.com www.ddbunlimited.com

Scan this code for Climate Control

Scan this code for Accessories

REVISIONS		
REV.	DESCRIPTION	DATE
A	Initial Release per DR-00969	5/28/2014
B	UPDATED TO 2017 WEBSITE FORMAT	8/9/2017
C	UPDATED NEW FORMAT	11/25/2020

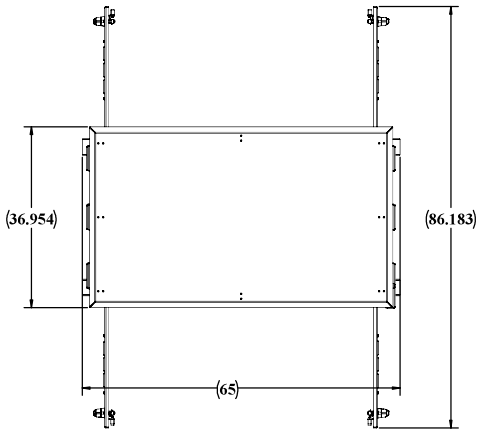

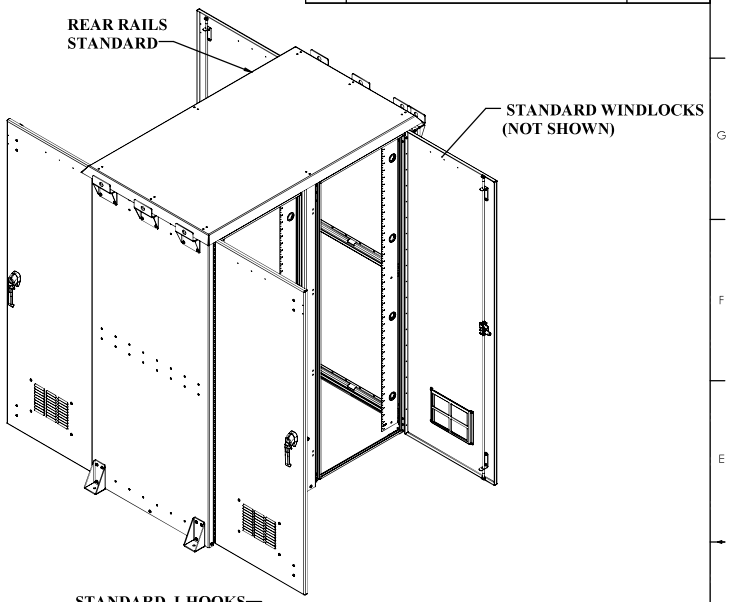

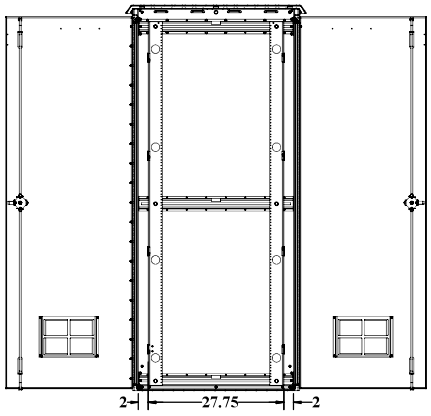

SECTION A-A
SCALE 1 : 12

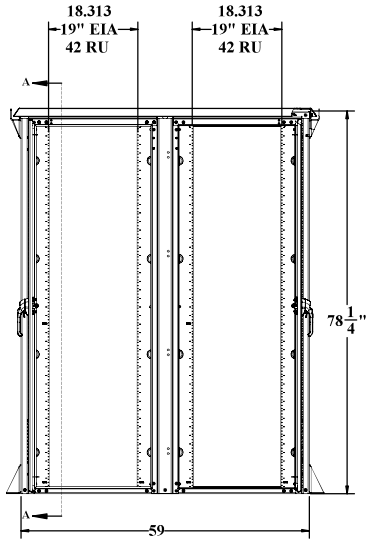

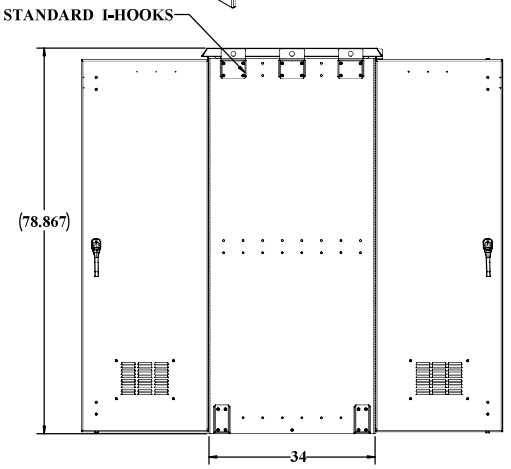

UNLESS OTHERWISE SPECIFIED:	DDB Unlimited Inc.			
DIMENSIONS ARE IN INCHES ANGULAR: ±1° FRACTIONAL/NO DECIMAL: ±1/16 TWO PLACE DECIMAL: ±.010 THREE PLACE DECIMAL: ±.005 ALL HOLES ±.003Ⓜ	2OD-78DD DWG, WEB, 2OD, 78, DD			
	SIZE	Cage Code:	DWG. NO.:	REV
	D	385Y5	00970	C
MATERIAL: 5052-H32-0.125 ASTM B209-04	SCALE: 1:8	WEIGHT: 474 lbs.		SHEET 1 OF 3
PAINT: DIAMOND VOGEL, BEIGE GLOSS TEXTURE 874920				
DO NOT SCALE DRAWING				

DDB FORM 7.1-REV.K 08/03/17

UNCLASSIFIED PUBLIC

File Location: (DDB) (EPDM Vault)
C:\DDB\DR Requests\Customers\DDB WEB DWG\2OD Family WEB\DR-00970 (2OD-78DD WEB

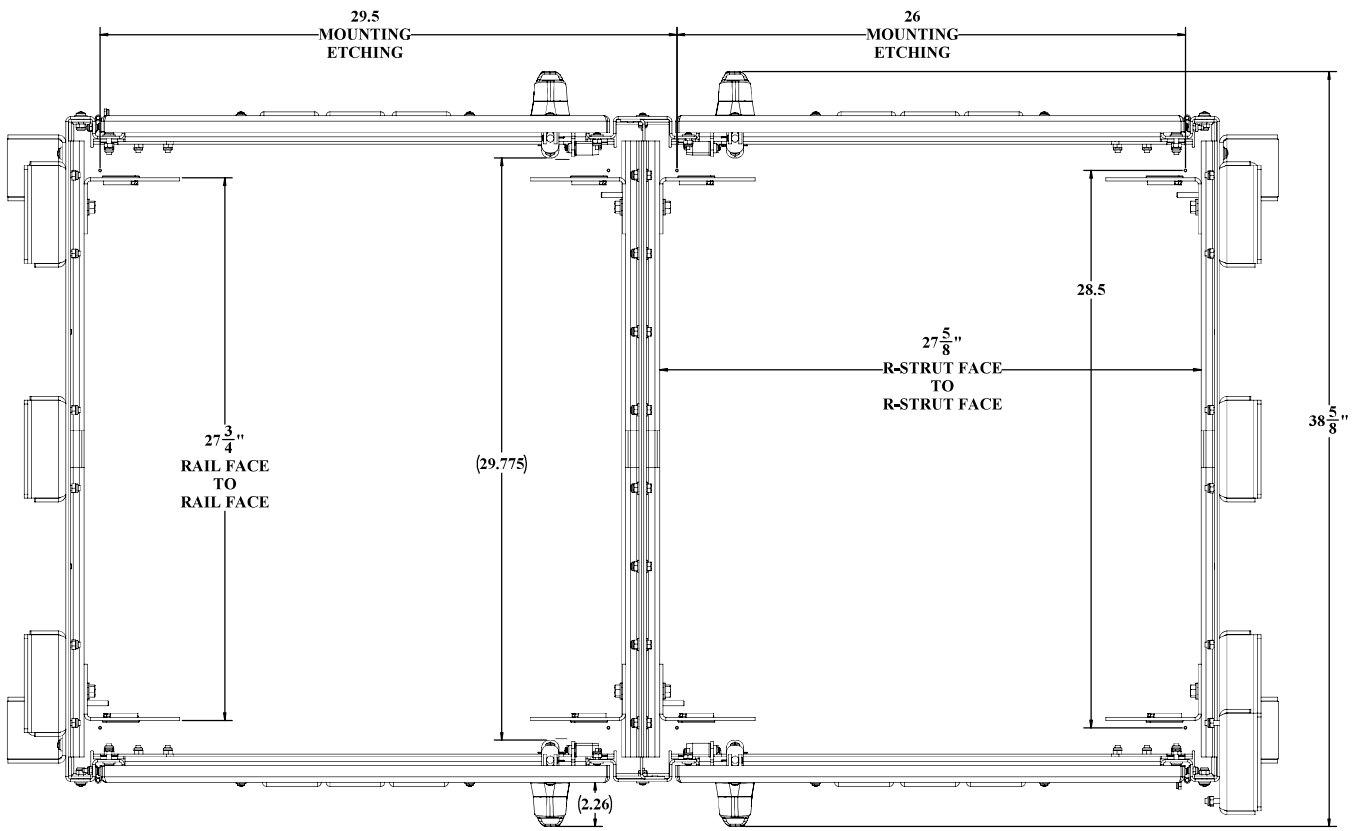

ALUMASHIELD AND CEILING NOT SHOWN

UNLESS OTHERWISE SPECIFIED:	DDB Unlimited Inc.			
DIMENSIONS ARE IN INCHES ANGULAR: ±1° FRACTIONAL/NO DECIMAL: ±1/32 TWO PLACE DECIMAL: ±.010 THREE PLACE DECIMAL: ±.005 ALL HOLES ±.003Ø	20D-50DD (CLOSED) DWG, WEB, 20D, 50, DD20D-50DD (CLOSED)			
	SIZE	Cage Code:	DWG. NO.:	REV
	D	3S5Y5	00970	C
MATERIAL: 5052-H32-0.125 ASTM B209-04	SCALE: 1:8	WEIGHT: 360 lbs.		SHEET 2 OF 3
PAINT: DIAMOND VOGEL, RIDGE GLOSS TEXTURE 874920				
DO NOT SCALE DRAWING				

DDB FORM 7.1-7 REV.K 08/02/17

UNCLASSIFIED PUBLIC

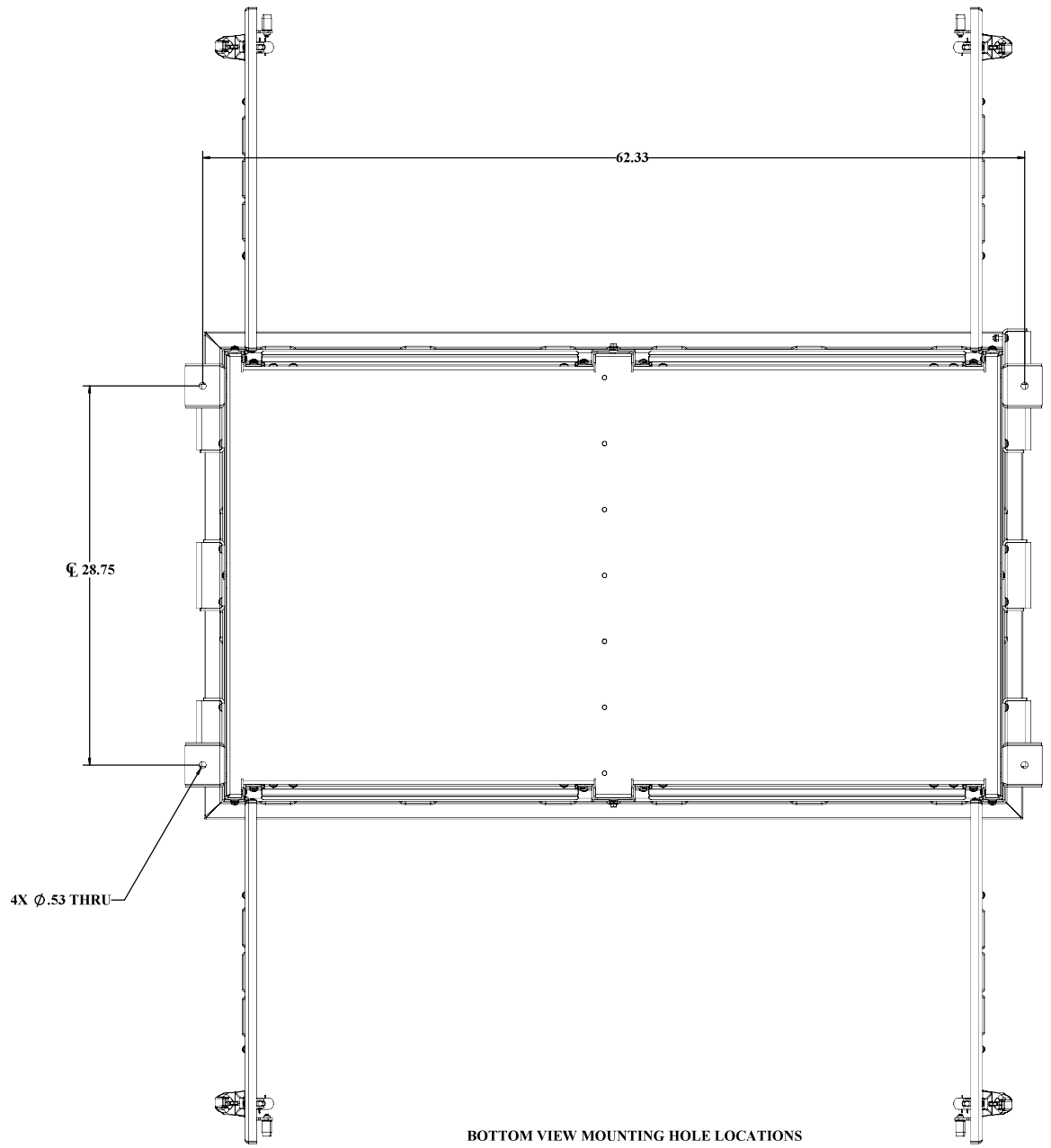

BOTTOM VIEW MOUNTING HOLE LOCATIONS

UNLESS OTHERWISE SPECIFIED:	DDB Unlimited Inc.			
DIMENSIONS ARE IN INCHES ANGULAR: ±1° FRACTIONAL/NO DECIMAL: ±1/32 TWO PLACE DECIMAL: ±.010 THREE PLACE DECIMAL: ±.005 ALL HOLES ±.003	20D-78DD DWG, WEB, 20D, 78, DD20D-78DD			
	SIZE	Cage Code:	DWG. NO.:	REV
	D	385Y5	00970	C
MATERIAL: 5052-H32-0.125 ASTM B209-04	SCALE: 1:8	WEIGHT: 474 lbs.		SHEET 3 OF 3
PAINT: DIAMOND VOGEL, RIDGE GLOSS TEXTURE 874920				
DO NOT SCALE DRAWING				

DDB FORM 7.1-TEMPLATE REV.K 08/02/17

UNCLASSIFIED PUBLIC

DDB UNLIMITED®

An ISO 9001 Certified company

2OD Series

2OD-78DDXC

Made in America

Believing in American Craftsmanship

15 YEAR WARRANTY

Why Choose the 2OD Series?

When a single bay solution just isn't sufficient, the 2OD series enclosures are ideal. Constructed of our own rugged Alumiflex®, it is noticeably lighter than steel yet strong enough to rack the heaviest equipment. The 2OD-78DDXC includes a number of standard features, such as an adjustable racking system with a versatile rail strut system (R-Strut), a 3-point locking system for security, a reversible rack system for 19" and 23" applications, lifting hooks for easy maneuvering into place, wind locks to secure doors safely when they are open, and our patented Alumishield® solar cap for managing heat loads. Furthermore, DDB offers an array of customizable choices, which include climate control (HVAC), electrical load panels, and cable entry solutions. These possibilities combine to produce an enclosure that can be customized to meet the specific needs that your site and clients may require. The 2OD undoubtably closes the gap between single-bay enclosures and larger building "hut" solutions, giving you the flexibility to meet any need in the field without the required stamps or inspections that traditional "huts" do . With an industry-leading 15-year warranty on every enclosure, DDB provides cutting-edge design, competitive pricing, benchmark lead times, and guaranteed delivery. Whether you require a custom enclosure or something from our substantial stock, our professional staff is here to help you today.



Application Types

Telecommunications
Wireless/Broadband
Fiber Optics
Back Haul
Public Safety
Utility
Base Station
Military
Trailer-Based Communications
Wi-Fi
LTEE/4G/5G



Environmental & Safety Ratings:

- ✓ NEMA 3R (shown above)
- ✓ NEMA 4 and 4X configurable (not shown)

Features

15 Year Warranty
0.125" Aluminum Construction
3 Point Lock System
Heavy Duty Out-Door Construction
Front and Rear Access
Standard Lifting Hooks
Stainless Steel External Hardware/Hinge
Cream Powder-Coat, Standard
Quick Shipping

Weight and Dimensions

Approximate Exterior Enclosure Dimensions:
79”H x 65”W x 47”D
Shipping Dimensions:
84"H X 84”W x 54"D- Palletized
Approximate Shipping Weight:
632 lbs.

2301 S. HWY 77 Pauls Valley, OK 73075
T: (405)-665-2876
sales@ddbunlimited.com www.ddbunlimited.com

DDB UNLIMITED®

An ISO 9001 Certified company

2OD Series

2OD-78DDXC

Made in America

Believing in American Craftsmanship

15 YEAR WARRANTY

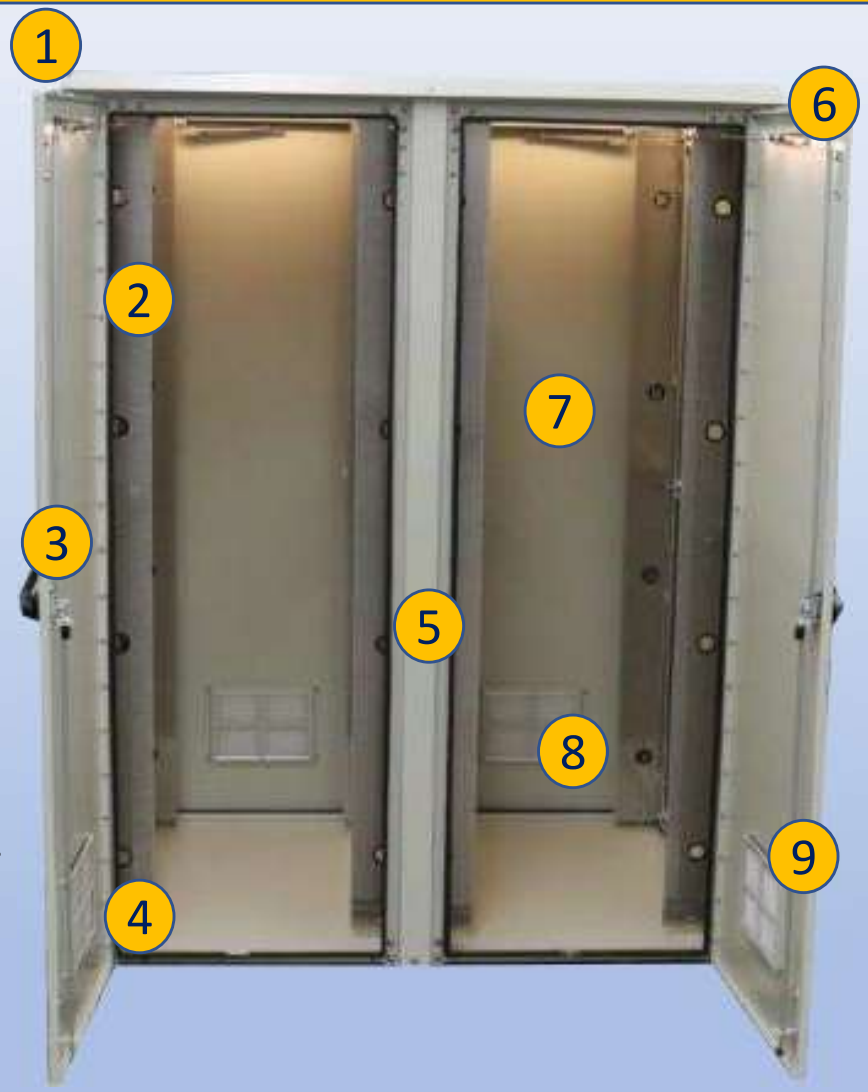

Features

1. Alumishield
2. 19” and 23” Adjustable Racking Rails
3. 3 Point Locking System
4. Stainless Steel Door Hinge
5. Powder-Coat Cream
6. Wind Locks
7. Rear Access Door
8. Reusable Filters
9. Heavy Duty 0.160” Doors

2301 S. HWY 77 Pauls Valley, OK 73075

T: (405)-665-2876

sales@ddbunlimited.com www.ddbunlimited.com

Scan this code for Climate Control

Scan this code for Accessories

REVISIONS		
REV.	DESCRIPTION	DATE
A	Initial Release per DR-00971	5/28/2014
B	UPDATE TO NEW FORMAT	11/25/2020

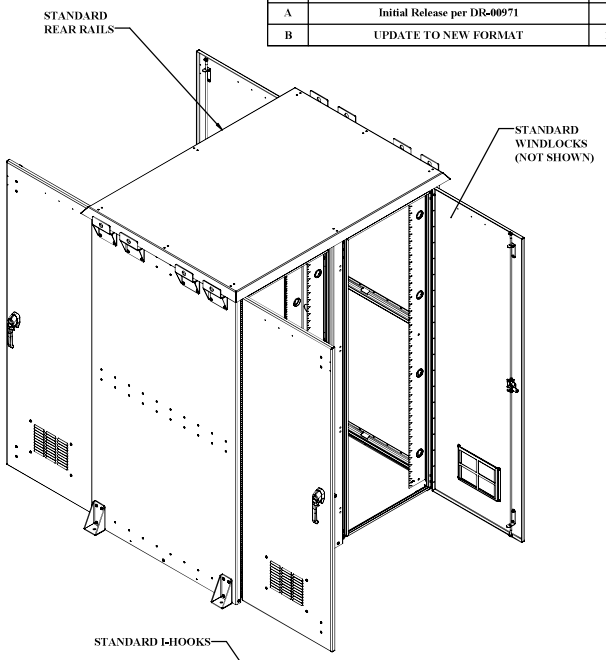

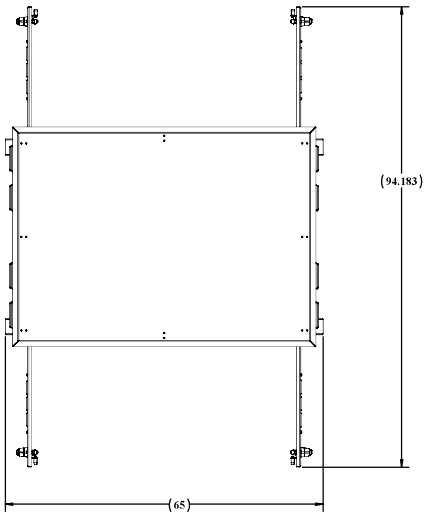

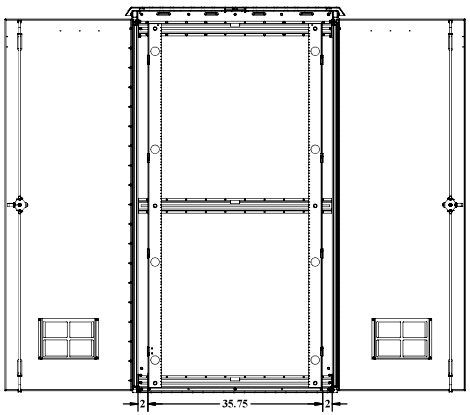

SECTION A-A
SCALE 1 : 12

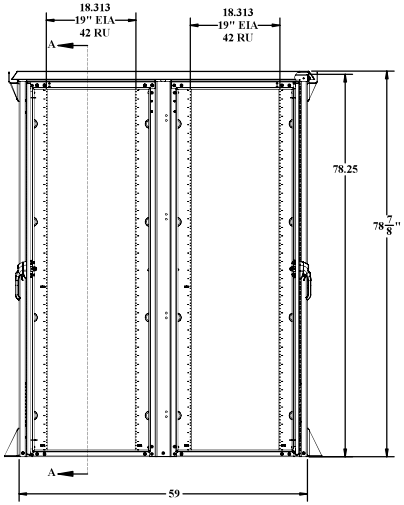

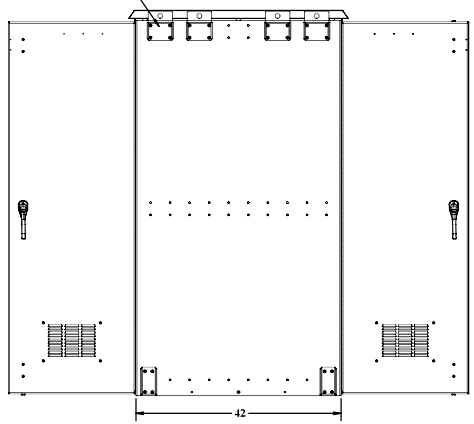

UNLESS OTHERWISE SPECIFIED: DIMENSIONS ARE IN INCHES. ANGULAR: ±1° FRACTIONAL: NO DECIMAL: ±1/16 TWO PLACE DECIMAL: ±.010 THREE PLACE DECIMAL: ±.005 ALL EDGES ARE BREAK	DDB Unlimited Inc. 20D-78DDX DWG, WEB, 20D, 78, DDX20D-78DDX		
	SIZE: D	Cage Code: 385Y5	DWG. NO.: 00971 REV: B
MATERIAL: 5052-H32 0.125 ASTM B209-04	SCALE: 1:8	WEIGHT: 516 lbs.	SHEET 1 OF 3
PAINT: DIAMOND VOGEL, BEIGE GLOSS TEXTURE 874920			
DO NOT SCALE DRAWING			

DDB FORM 7.1-REV.K 08/03/17

UNCLASSIFIED PUBLIC

File Location: (DDB) (EPDM Vault)
C:\DDB\DR Requests\Customers\DDB WEB DWG\20D Family WEB\DR-00971 (20D-78DDX WEB

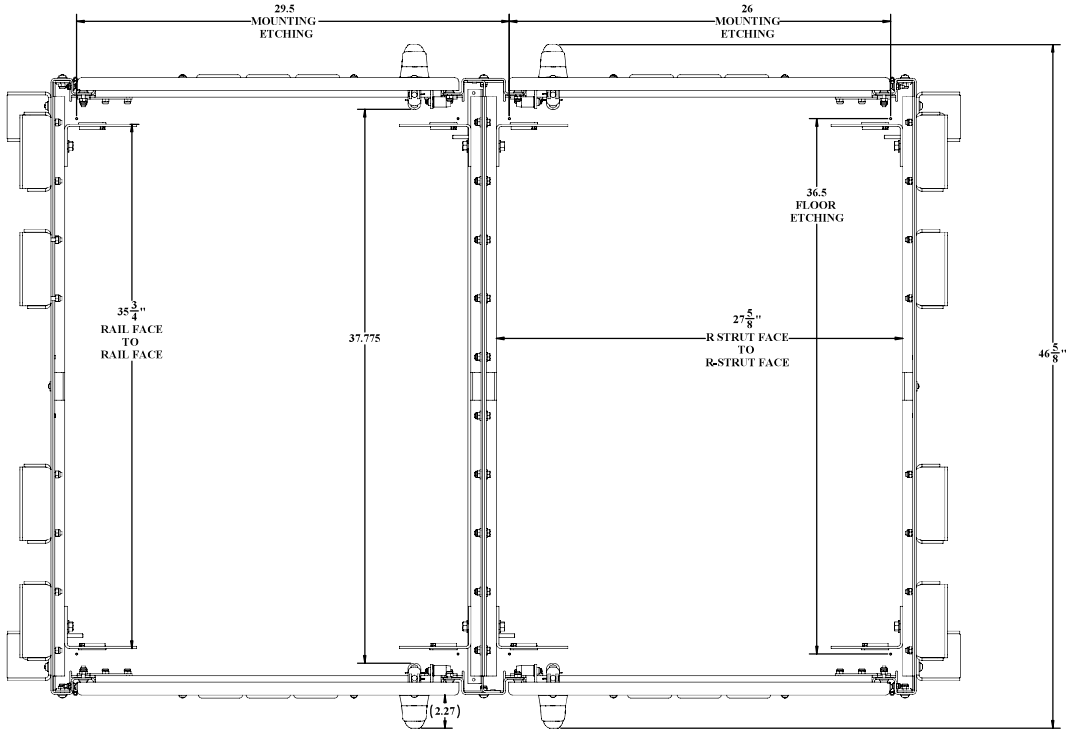

TOP VIEW CEILING AND SOLAR SHIELD NOT SHOWN

UNLESS OTHERWISE SPECIFIED:	DDB Unlimited Inc.			
DIMENSIONS ARE IN INCHES ANGULAR: ±1° FRACTIONAL/NO DECIMAL: ±1/16 TWO PLACE DECIMAL: ±.010 THREE PLACE DECIMAL: ±.005 ALL HOLES ±.003	20D-30DDX-CLOSED DWG, WEB, 20D, 30, DDX20D-30DDX-CLOSED			
	SIZE	Cage Code:	DWG. NO.:	REV
	D	3S5Y5	00971	B
MATERIAL: 5052-H32-0.125 ASTM B209-04	SCALE: 1:8	WEIGHT: 303 lbs.		SHEET 2 OF 3
PAINT: DIAMOND VOGEL, RIDGE GLOSS TEXTURE 874920				
DO NOT SCALE DRAWING				

DDB FORM 7.1-REV.K 08/02/17

UNCLASSIFIED PUBLIC

File Location: (DDB) (EPDM Vault)
C:\DDB\DR Requests\Customers\DDB WEB DWG\20D Family WEB\DR-00971 (20D-78DDX WEB

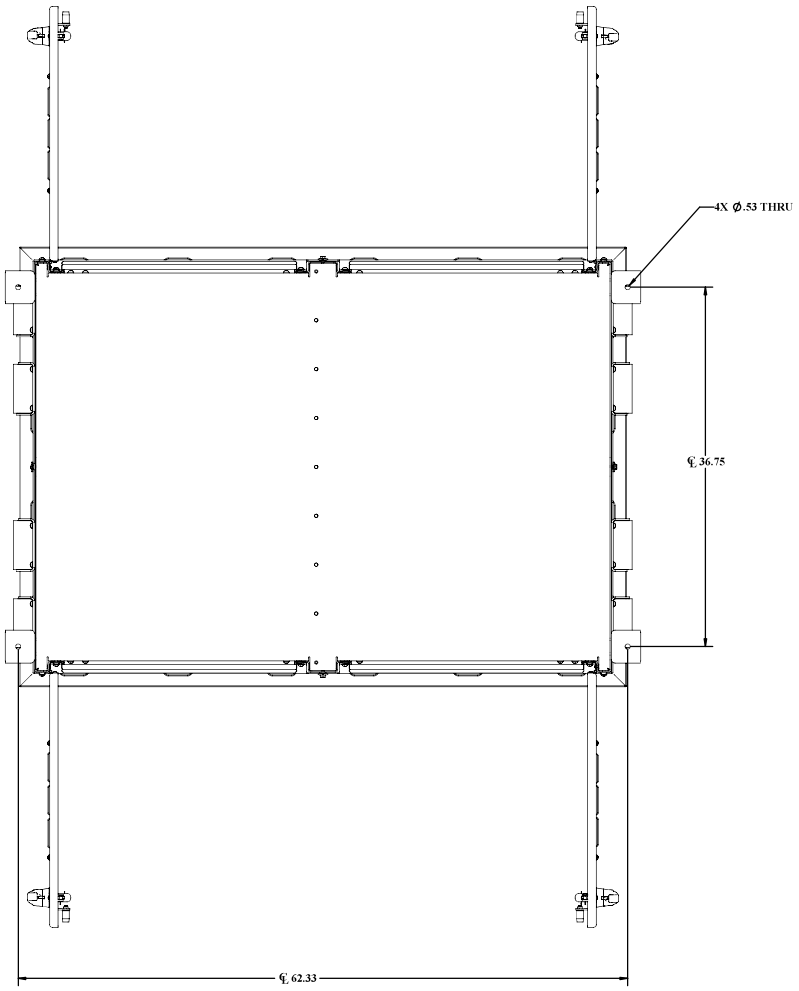

BOTTOM VIEW MOUNTING HOLE LOCATIONS

UNLESS OTHERWISE SPECIFIED:	***DDB Unlimited Inc.***		
DIMENSIONS ARE IN INCHES ANGULAR: ±1° FRACTIONAL: NO DECIMAL: ±1/16 TWO PLACE DECIMAL: ±.010 THREE PLACE DECIMAL: ±.005 ALL HOLES ±.003Ø	20D-78DDX DWG, WEB, 20D, 78, DDX20D-78DDX		
	SIZE: D	Cage Code: 385Y5	DWG. NO.: 00971	REV: B
MATERIAL: 5052-H32 0.125 ASTM B209-04	SCALE: 1:8	WEIGHT: 516 lbs.		SHEET 3 OF 3
PAINT: DIAMOND VOGEL, RIDGE GLOSS TEXTURE 874920				
DO NOT SCALE DRAWING				

DDB FORM 7.1-REV.K 08/02/17

UNCLASSIFIED PUBLIC

30D-30DXC

30" H x 88.5" W x 25" D (45 RU) Outdoor Enclosure

Click Here For More Information Online





General

Weight
- 259 Lbs. assembled
- 419 Lbs. shipping weight

Doors
- 6, secured by three point locking system
- Locks via customer supplied padlocks
- Sealed with .875" aluminum filled gaskets

Material
- .125" Alumiflex™
- Finish: Painted cream
- RF properties: Non-ferrous

Vents
- 30 bottom louvers per door
- 26 top louvers – In top cover, under Alumishield™
- One removable filter panel per door
- 26 fixed filter pads in top cover

Handles
- Stainless steel, padlocking

Lifting Hooks
- 4, standard

Racking Specifications

Rails
- Three sets standard (for additional rails see accessories)
- Alodine coated
- Holes tapped for 10-32 threads
- Each rail supported by two R-STRUTS™
- .160" Material (Alumiflex™)

Spacing
- 19" or 23" Racking available

Useable Height
- 26.25"

Useable Depth
- Maximum: 21.5" Minimum: 19.75"

Inside Clearance - Less Rails

Height
- 30"

Width
- 27.625" each compartment

Depth
- See racking specifications – Useable depth

Ratings

NEMA Class Types available
- Class 250 Type 4X

Paint Tested
- 1000 Hour salt spray (textured)
- 1000 Hour immersion

Door Opening Clearance

Height
- 26.75"

Width
- 23.625"

Exterior Cabinet Dimensions

Main Body
- Height: 30.98"
- Width: 88.5"
- Depth: 25"

Alumishield™
- Hang down height: 1.75"
- Width: 93.5"
- Depth: 29.5"

Handles
- Protrude 1.875"

Total Space Occupied
- Height: 31.605"
- Width: 94.5"
- Depth: 28.75"

	*Section Starting & Ending Points	Vertical Height Per section	Effective Depth For Each Section
Top	26.75” – 30.98”	3.25”	21.50”
	26.57” – 26.75”	.18”	20.50”
	21.00” – 26.57”	5.57”	21.50”
Center	9.00” – 21.00”	12.00”	19.75”
	3.43” – 9.00”	5.57”	21.50”
	3.25” – 3.43”	.18”	20.50”
Bottom	0.00” – 3.25”	3.25”	21.50”

WEB DRAWING (NOT FOR FABRICATION

REVISIONS		
REV.	DESCRIPTION	DATE
A	Initial Release per DR-00976	5/28/2014
B	UPDATED TO 2017 WEBSITE FORMAT	8/9/2017
C	UPDATED FORMAT	11/25/2020

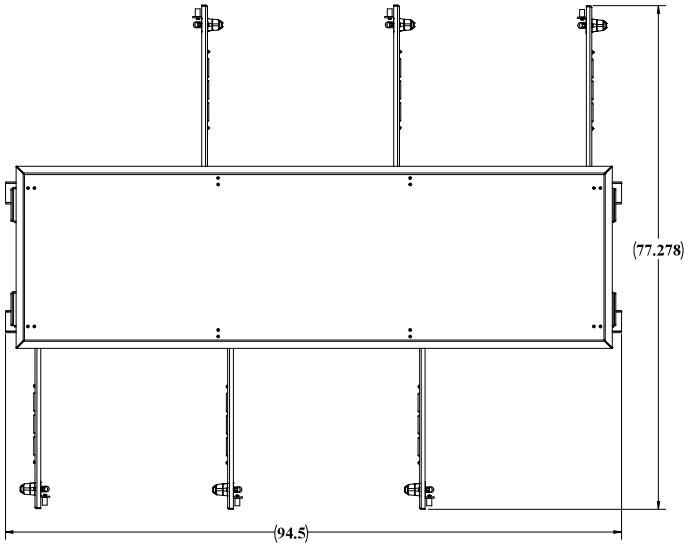

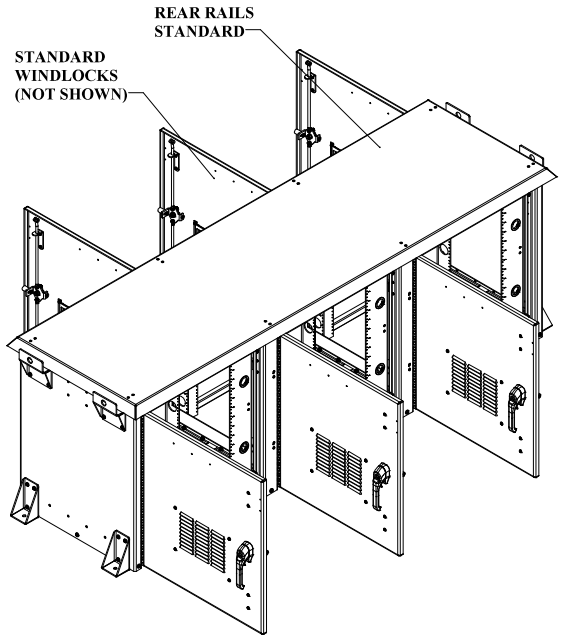

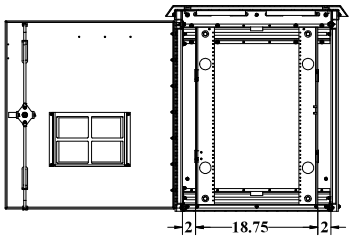

SECTION A-A
SCALE 1 : 9

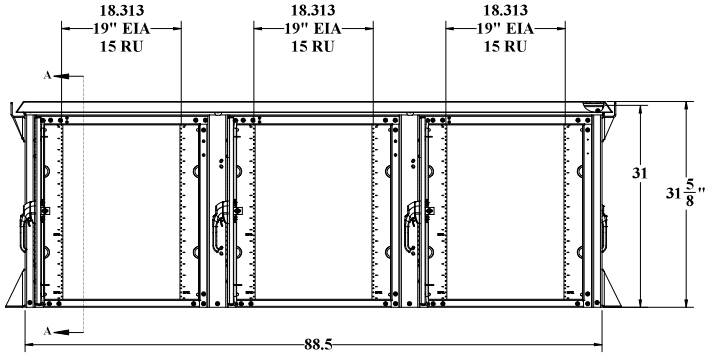

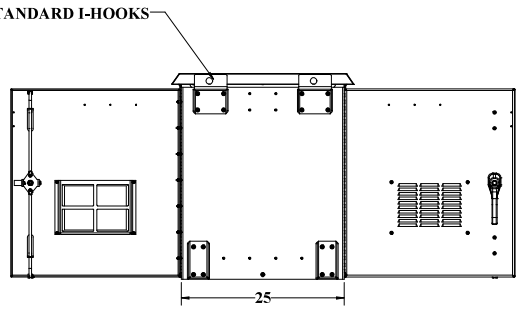

WEB DRAWING (NOT FOR FABRICATION

UNLESS OTHERWISE SPECIFIED:	DDB Unlimited Inc.			
DIMENSIONS ARE IN INCHES ANGULAR: ±1° FRACTIONAL: ±0.125 TWO PLACE DECIMAL: ±0.010 THREE PLACE DECIMAL: ±0.005 ALL EDGES #100RMS	30D-30DX DWG, 30D, 30, DX			
	SIZE	Cage Code:	DWG. NO.:	REV
	D	3B5Y5	00976	C
MATERIAL: 5052-H32XX 0.125-ASTM B209-04	SCALE: 1:8	WEIGHT: 311 lbs.		SHEET 1 OF 3
PAINT: Diamond Vogel Beige Gloss Texture ET-6320				
DO NOT SCALE DRAWING				

UNCLASSIFIED PUBLIC
THE INFORMATION CONTAINED IN THIS DRAWING IS THE SOLE PROPERTY OF DDB Unlimited, INC. ANY
REPRODUCTION IN PART OR AS A WHOLE WITHOUT THE WRITTEN PERMISSION OF DDB Unlimited, INC. IS PROHIBITED.

File Location: (DDB)(EPDM Vault:)
C:\DDB\Drawing Requests\Customers\DDB WEB DWG\30D Family WEB\DR-00976 (30D-30DX

DDB-FORM 7.1-REV K 08/02/17

WEB DRAWING (NOT FOR FABRICATION

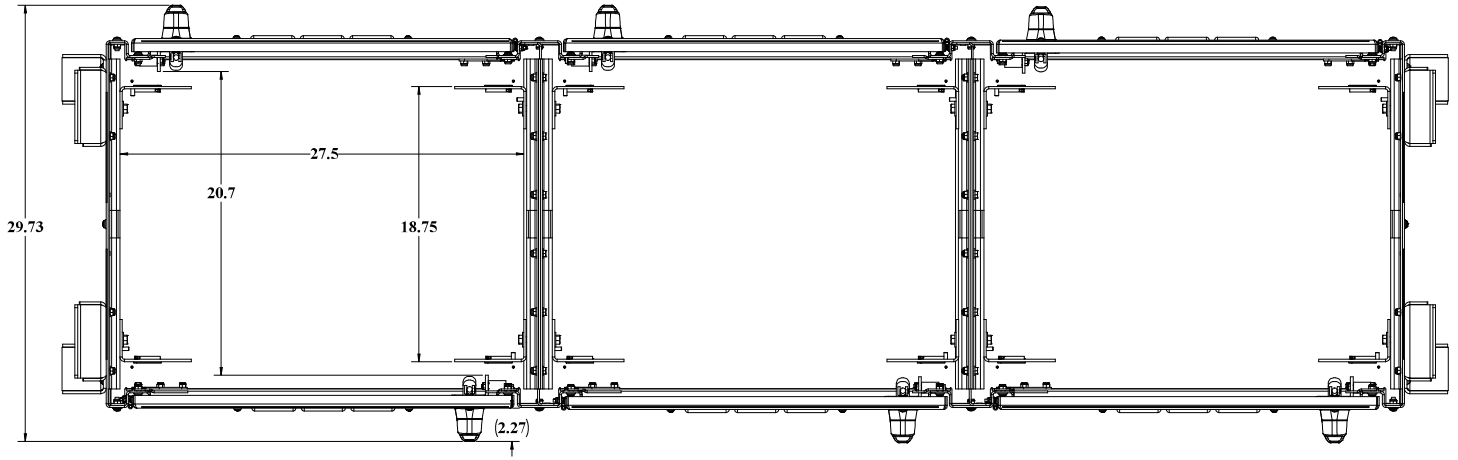

TOP VIEW SOLAR SHIELD AND CEILING NOT SHOWN

WEB DRAWING (NOT FOR FABRICATION

UNLESS OTHERWISE SPECIFIED:	DDB Unlimited Inc.			
DIMENSIONS ARE IN INCHES ANGULAR: ±1° FRACTIONAL/NO DECIMAL: ±0.1250 TWO PLACE DECIMAL: ±0.0100 THREE PLACE DECIMAL: ±0.0050 ALL EDGES ##SHARP	30D-30DX-CLOSED DWG, 30D, 30, DX			
	SIZE	Cage Code:	DWG. NO.:	REV
MATERIAL: 5052-H32/6X.125-ASTM B209-94	D	3B5Y5	00976	C
PAINT: Diamond Vogel Beige Gloss Texture FT-0320	SCALE: 1:8	WEIGHT: 311 lbs.		SHEET 2 OF 3
DO NOT SCALE DRAWING				

UNCLASSIFIED PUBLIC
THE INFORMATION CONTAINED IN THIS DRAWING IS THE SOLE PROPERTY OF DDB Unlimited, INC. ANY
REPRODUCTION IN PART OR AS A WHOLE WITHOUT THE WRITTEN PERMISSION OF DDB Unlimited, INC. IS PROHIBITED.

File Location: (DDB)(EPDM Vault:)
C:\DDB\Drawing Requests\Customers\DDB WEB DWG\30D Family WEB\DR-00976 (30D-30DX

DDB FORM 7.1-REV.K 08/03/17

WEB DRAWING (NOT FOR FABRICATION

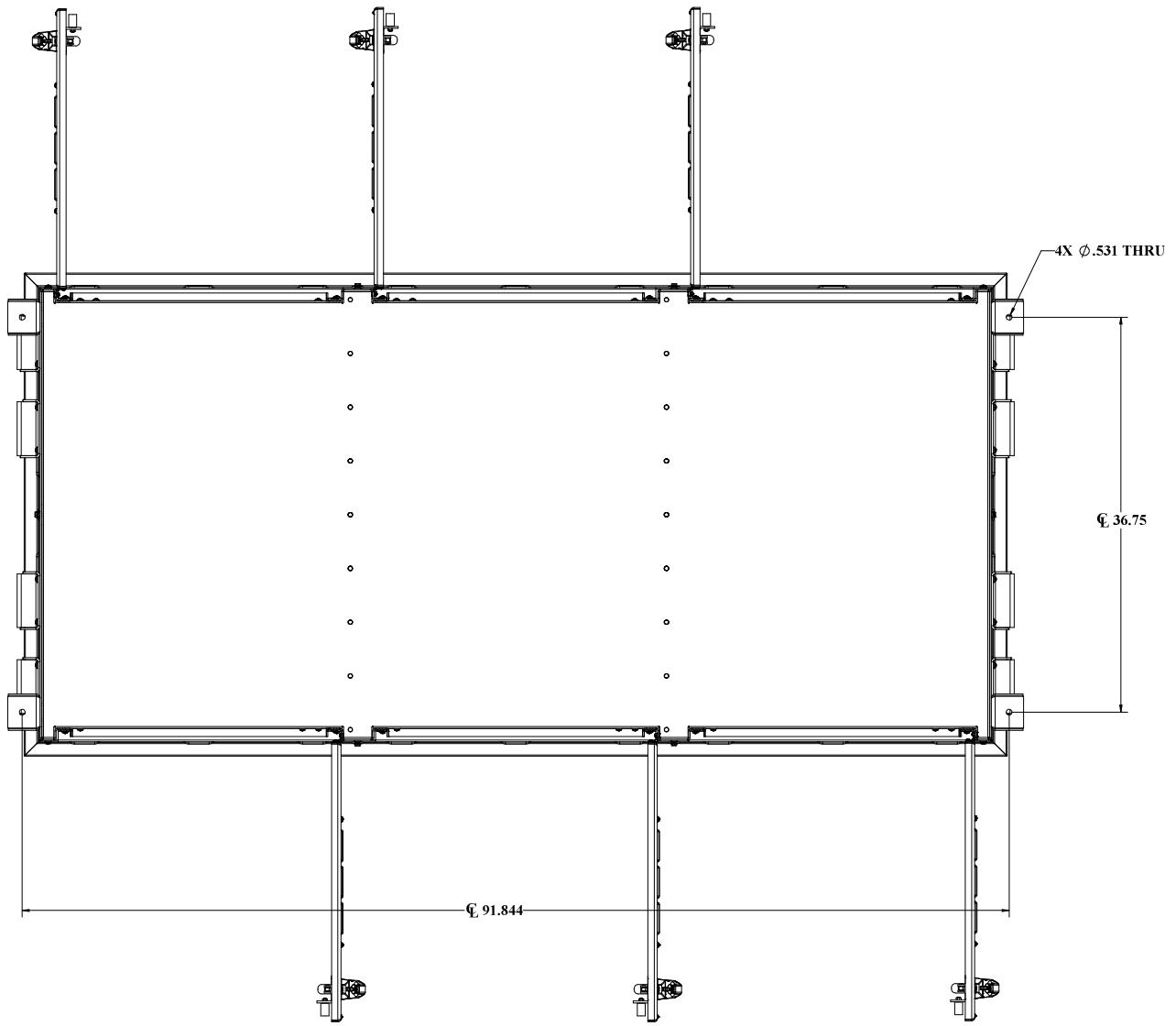

MOUNTING HOLES

WEB DRAWING (NOT FOR FABRICATION

UNLESS OTHERWISE SPECIFIED:	*DDB Unlimited Inc.*			
DIMENSIONS ARE IN INCHES ANGULAR: ±1° FRACTIONAL/NO DECIMAL: ±0.1250 TWO PLACE DECIMAL: ±0.0500 THREE PLACE DECIMAL: ±0.0100 ALL HOLES ±0.0050	30D-30DDX **DWG, 30D, 30, DDX**			
	SIZE	Cage Code:	DWG. NO.:	REV
	D	3B5Y5	00976	C
MATERIAL: 5052-H32XX 125-ASTM B209-04	SCALE: 1:8	WEIGHT: 402 lbs.		SHEET 3 OF 3
PAINT: Diamond Vogel Beige Gloss Texture ET-0320				
DO NOT SCALE DRAWING				

DDB FORM 7.1-7 REV.K 08/03/17

UNCLASSIFIED PUBLIC
THE INFORMATION CONTAINED IN THIS DRAWING IS THE SOLE PROPERTY OF DDB Unlimited, INC. ANY
REPRODUCTION IN PART OR AS A WHOLE WITHOUT THE WRITTEN PERMISSION OF DDB Unlimited, INC. IS PROHIBITED.

File Location: (DDB)(EPDM Vault:)
C:\DDB\Drawing Requests\Customers\DDB WEB DWG\30D Family WEB\DR-00976 (30D-30DX

30D-30DDC

30" H x 88.5" W x 34" D (45 RU) Outdoor Enclosure*

Click Here For More Information Online





* Front and Rear sets of rails allow some equipment to rack both directions providing up to 90 RU

General

Weight
- 304 Lbs. assembled
- 464 Lbs. shipping weight

Doors
- 6, secured by three point locking system
- Locks via customer supplied padlocks
- Sealed with .875" aluminum filled gaskets

Material
- .125" Alumiflex®
- Finish: Painted cream
- RF properties: Non-ferrous

Vents
- 30 bottom louvers per door
- 26 top louvers – In top cover, under Alumishield®
- One removable filter panel per door
- 26 fixed filter pads in top cover

Handles
- Stainless steel, padlocking

Lifting Hooks
- 6, standard

Racking Specifications

Rails
- Six sets standard (for additional rails see accessories)
- Alodine coated
- Holes tapped for 10-32 threads
- Each rail supported by two R-STRUTS™
- .160" Material (Alumiflex®)

Spacing
- 19" or 23" Racking available

Useable Height
- 26.25"

Useable Depth
- Maximum: 30.5" Minimum: 28.75"

Inside Clearance - Less Rails

Height
- 30"

Width
- 27.625" each compartment

Depth
- See racking specifications – Useable depth

Ratings

NEMA Class Types available
- Class 250 Type 3R

Paint Tested
- 1000 Hour salt spray (textured)
- 1000 Hour immersion

Door Opening Clearance

Height
- 26.75"

Width
- 23.625"

Exterior Cabinet Dimensions

Main Body
- Height: 30.98"
- Width: 88.5"
- Depth: 34"

Alumishield®
- Hang down height: 1.75"
- Width: 93.5"
- Depth: 36.5"

Handles
- Protrude 1.875"

Total Space Occupied
- Height: 31.605"
- Width: 94.5"
- Depth: 37.75"

	*Section Starting & Ending Points	Vertical Height Per section	Effective Depth For Each Section
Top	26.75" – 30.98"	3.25"	30.50"
	26.57" – 26.75"	.18"	29.50"
	21.00" – 26.57"	5.57"	30.50"
Center	9.00" – 21.00"	12.00"	28.75"
	3.43" – 9.00"	5.57"	30.50"
	3.25" – 3.43"	.18"	29.50"
Bottom	0.00" – 3.25"	3.25"	30.50"

WEB DRAWING (NOT FOR FABRICATION)

REVISIONS		
REV.	DESCRIPTION	DATE
A	Initial Release per DR-00977	5/28/2014
B	UPDATED FORMAT	12/07/2020

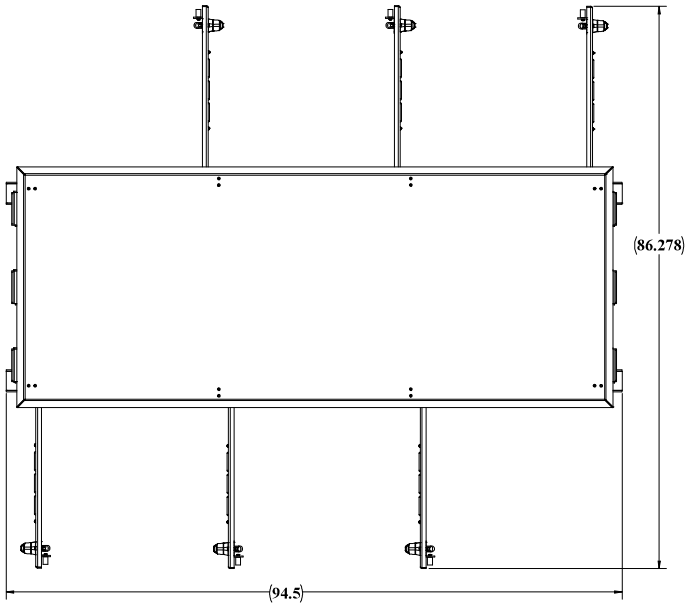

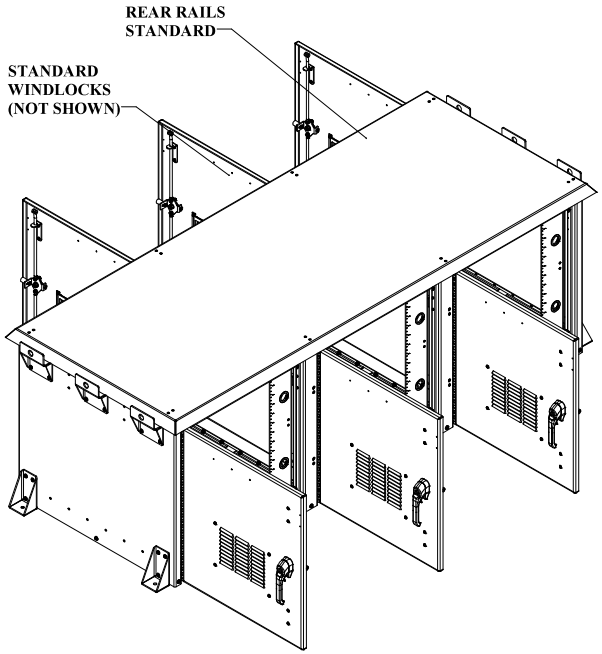

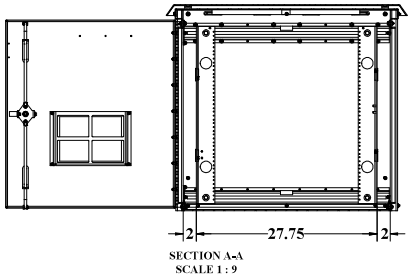

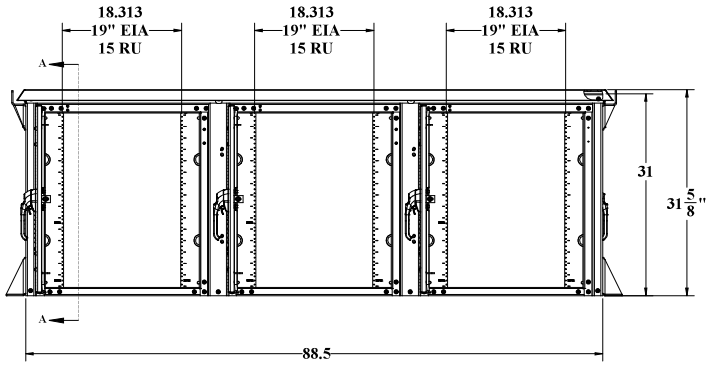

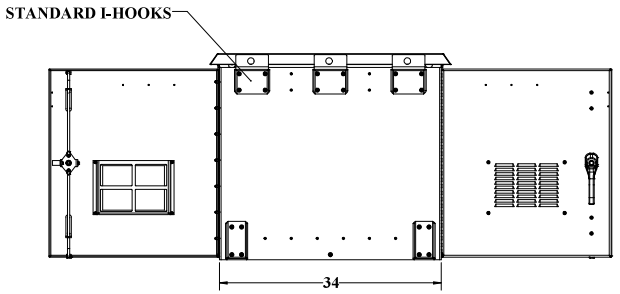

WEB DRAWING (NOT FOR FABRICATION)

UNLESS OTHERWISE SPECIFIED:		NAME	DATE	DDB Unlimited Inc.			
DIMENSIONS ARE IN INCHES	Model by:	DDB	6/4/2014	30D-XXXX			
ANGULAR: MACH ± BEND ± TWO PLACE DECIMAL ± THREE PLACE DECIMAL ±	Drawn by:	aerose	12/04/20	DWG, 30D, 30, DD			
ALL EDGES BREAK MATERIAL THICKNESS ±	Sales Rep.			SIZE	Cage Code:	DWG. NO.:	REV
MATERIAL: 5052-H32/5A 125-145TM B209-04	Q.A. Appr.	troy	12/08/20	D	3B5Y5	00977	B
PAINT: Textured Sand Beige Gloss Texture 15x070	Prod.Mgr.	ClarkK	12/09/20	SCALE: 1:8	WEIGHT: 358 lbs.		SHEET 1 OF 3
DO NOT SCALE DRAWING	Control Number:						

DDB FORM 7.1-2 REV.F 05/02/19

UNCLASSIFIED PUBLIC

File Location: (DDB)\EPDM Vault\
C:\DDB\Drawing Requests\Customers\DDB WEB DWG\30D Family WEB\DR-00977 (30D-30D WEB DWG)\

WEB DRAWING (NOT FOR FABRICATION)

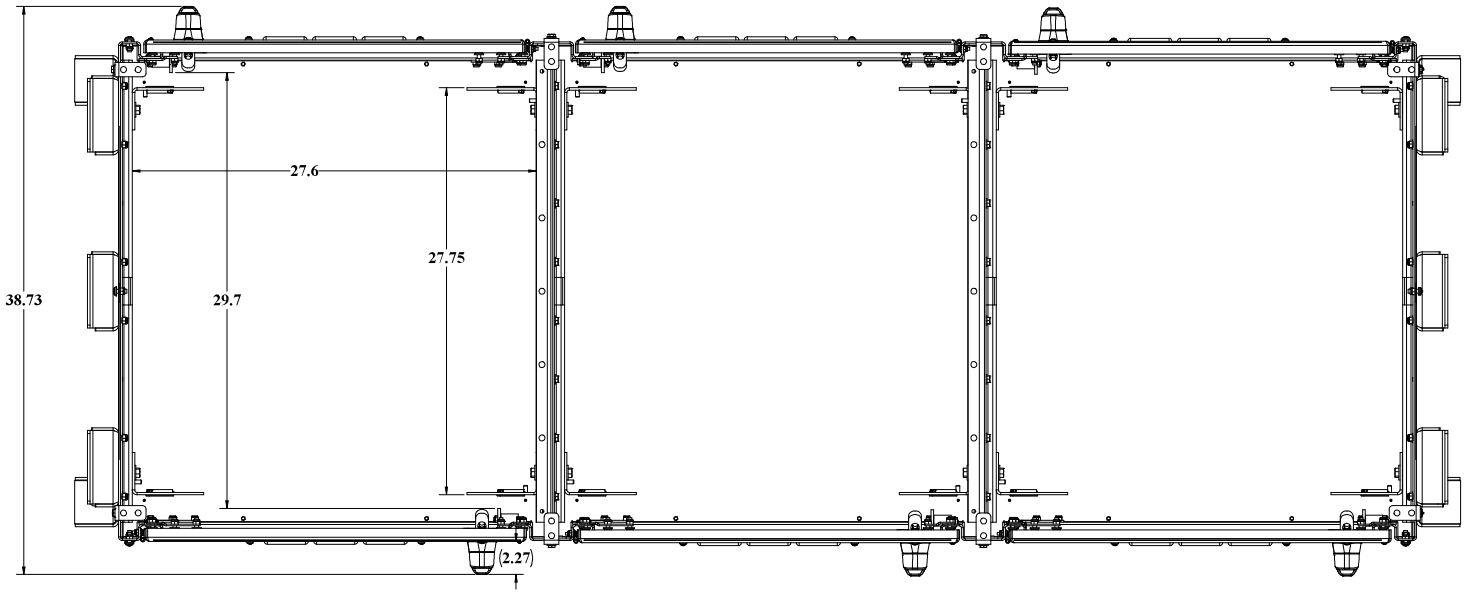

TOP VIEW SOLAR SHIELD AND CEILING NOT SHOWN

WEB DRAWING (NOT FOR FABRICATION)

UNLESS OTHERWISE SPECIFIED:	DDB Unlimited Inc.			
DIMENSIONS ARE IN INCHES ANGULAR: ±1° FRACTIONAL/NO DECIMAL: ±0.1250 TWO PLACE DECIMAL: ± 0.0100 THREE PLACE DECIMAL: ± 0.0050 ALL EDGES ##SHARP##	DD Closed DWG, 3OD, DOORS CLOSED			
	SIZE	Cage Code:	DWG. NO.:	REV
	D	3B5Y5	00977	B
MATERIAL: 5052-H32XX 125-ASTM B209-94	SCALE: 1:8	WEIGHT: 624 lbs.		SHEET 2 OF 3
PAINT: Diamond Vogel Beige Gloss Texture ET-6320				
DO NOT SCALE DRAWING				

DDB FORM 7.1-7 REV.K 08/02/17

UNCLASSIFIED PUBLIC
THE INFORMATION CONTAINED IN THIS DRAWING IS THE SOLE PROPERTY OF DDB Unlimited, INC. ANY
REPRODUCTION IN PART OR AS A WHOLE WITHOUT THE WRITTEN PERMISSION OF DDB Unlimited, INC. IS PROHIBITED.

File Location: (DDB)(EPDM Vault:)
C:\DDB\Drawing Requests\Customers\DDB WEB DWG\3OD Family WEB\DR-00977 (3OD)-3ODD

WEB DRAWING (NOT FOR FABRICATION)

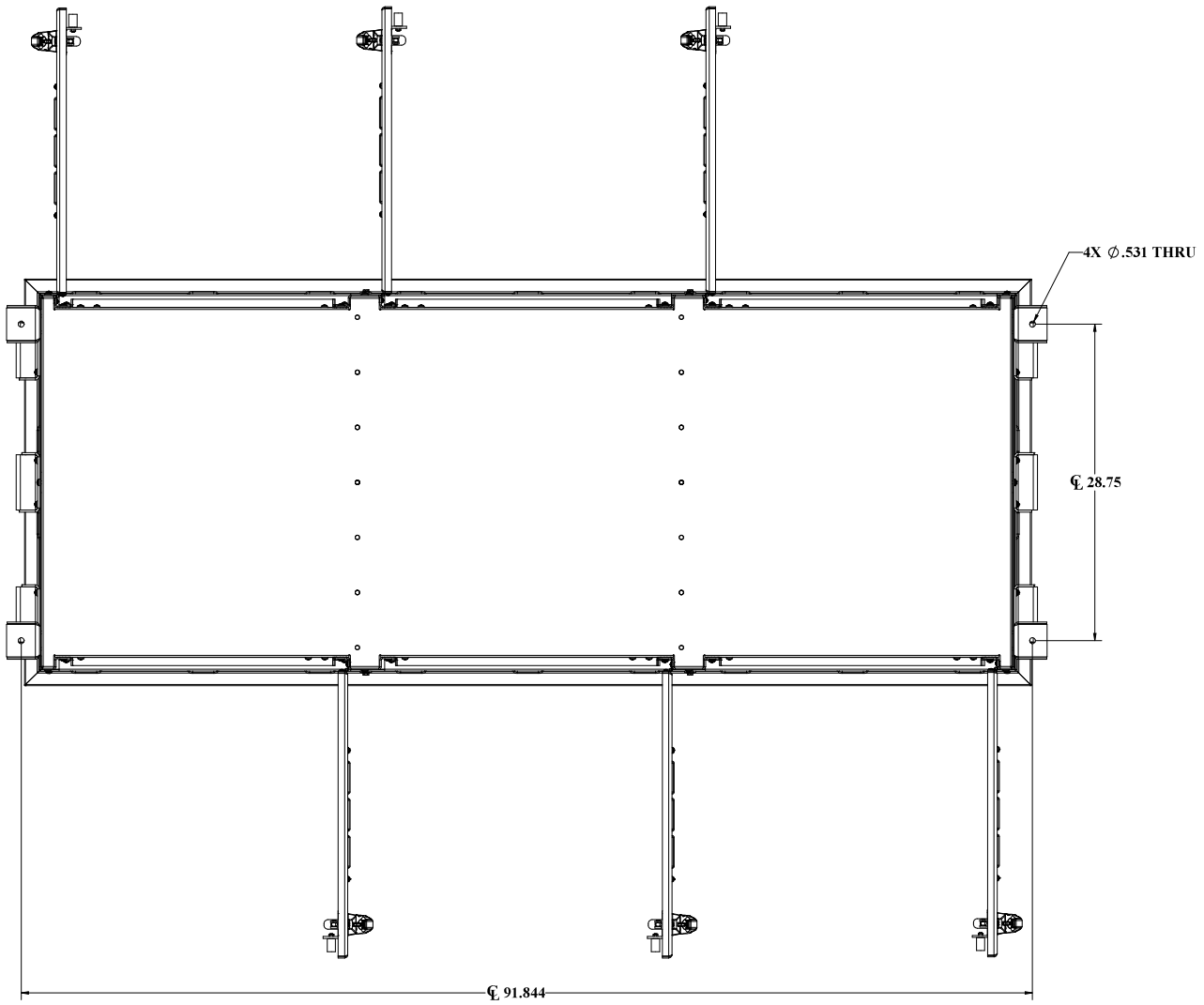

MOUNTING HOLES

WEB DRAWING (NOT FOR FABRICATION)

UNLESS OTHERWISE SPECIFIED:	*DDB Unlimited Inc.*			
DIMENSIONS ARE IN INCHES ANGULAR: ±1° FRACTIONAL/NO DECIMAL: ±0.125 TWO PLACE DECIMAL: ± 0.010 THREE PLACE DECIMAL: ± 0.005 ALL EDGES ⌀ 0.005Ⓜ	3OD-30DD **DWG, 3OD, 30, DD**			
	SIZE	Cage Code:	DWG. NO.:	REV
	D	3B5Y5	00977	B
MATERIAL: 5052-H32XX 125-ASTM B209-04	SCALE: 1:8	WEIGHT: 358 lbs.		SHEET 3 OF 3
PAINT: Diamond Vogel Beige Gloss Texture ET-6320				
DO NOT SCALE DRAWING				

DDB FORM 7.1-REV.K 08/03/17

UNCLASSIFIED PUBLIC
THE INFORMATION CONTAINED IN THIS DRAWING IS THE SOLE PROPERTY OF DDB Unlimited, INC. ANY
REPRODUCTION IN PART OR AS A WHOLE WITHOUT THE WRITTEN PERMISSION OF DDB Unlimited, INC. IS PROHIBITED.

File Location: (DDB)(EPDM Vault:)
C:\DDB\Drawing Requests\Customers\DDB WEB DWG\3OD Family WEB\DR-00977 (3OD-30DD

3OD-30DDXC

30" H x 88.5" W x 42" D (45 RU) Outdoor Enclosure*

Click Here For More Information Online





* Front and Rear sets of rails allow some equipment to rack both directions providing up to 90 RU

General

Weight
- 350 Lbs. assembled
- 510 Lbs. shipping weight

Doors
- 6, secured by three point locking system
- Locks via customer supplied padlocks
- Sealed with .875" aluminum filled gaskets

Material
- .125" Alumiflex®
- Finish: Painted cream
- RF properties: Non-ferrous

Vents
- 30 bottom louvers per door
- 26 top louvers – In top cover, under Alumishield®
- One removable filter panel per door
- 12 fixed filter pads in top cover

Handles
- Stainless steel, padlocking

Lifting Hooks
- 8, standard

Racking Specifications

Rails
- Six sets standard (for additional rails see accessories)
- Alodine coated
- Holes tapped for 10-32 threads
- Each rail supported by two R-STRUTS™
- .160" Material (Alumiflex®)

Spacing
- 19" or 23" Racking available

Useable Height
- 26.8125"

Useable Depth
- Maximum: 38.5" Minimum: 36.75"

Inside Clearance - Less Rails

Height
- 30"

Width
- 27.625" each compartment

Depth
- See racking specifications – Useable depth

Ratings

NEMA Class Types available
- Class 250 Type 3R

Paint Tested
- 1000 Hour salt spray (textured)
- 1000 Hour immersion

Door Opening Clearance

Height
- 26.75"

Width
- 23.625"

Exterior Cabinet Dimensions

Main Body
- Height: 30.98"
- Width: 88"
- Depth: 42.25"

Alumishield®
- Width: 93.5"
- Hang down height: 1.75"
- Depth: 44.5"

Handles
- Protrude 1.875"

Total Space Occupied
- Height: 30.5"
- Width: 88"
- Depth: 46"

	*Section Starting & Ending Points	Vertical Height Per section	Effective Depth For Each Section
Top	26.75" – 30.98"	3.25"	30.50"
	26.57" – 26.75"	.18"	29.50"
	21.00" – 26.57"	5.57"	30.50"
Center	9.00" – 21.00"	12.00"	28.75"
	3.43" – 9.00"	5.57"	30.50"
	3.25" – 3.43"	.18"	29.50"
Bottom	0.00" – 3.25"	3.25"	30.50"

WEB DRAWING (NOT FOR FABRICATION)

REVISIONS		
REV.	DESCRIPTION	DATE
A	Initial Release per DR-00978	5/28/2014
B	UPDATED FORMAT	12/4/2020

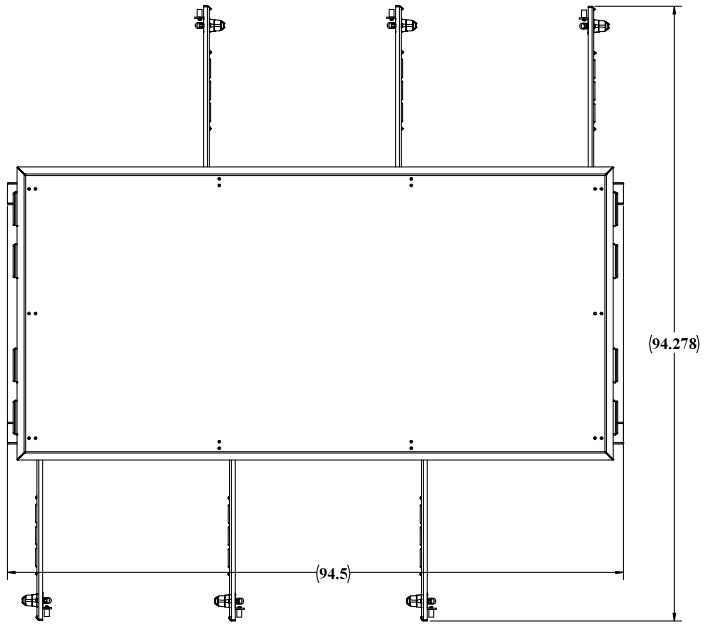

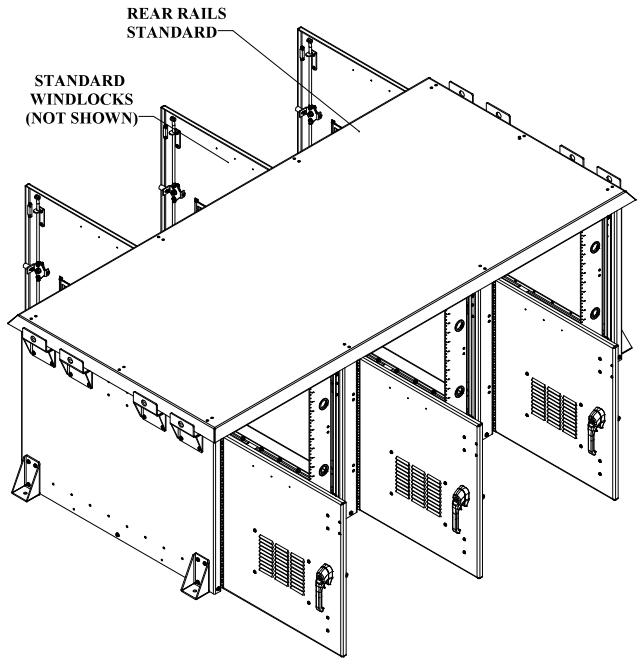

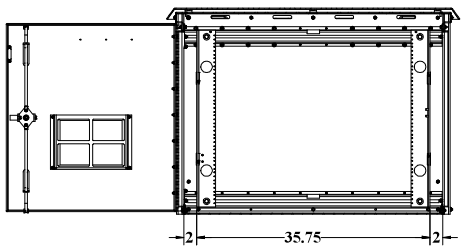

SECTION A-A
SCALE 1 : 9

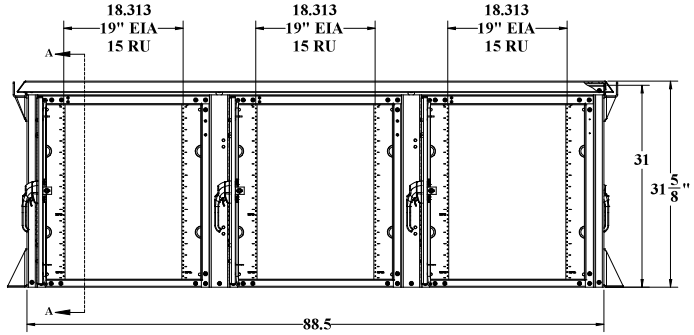

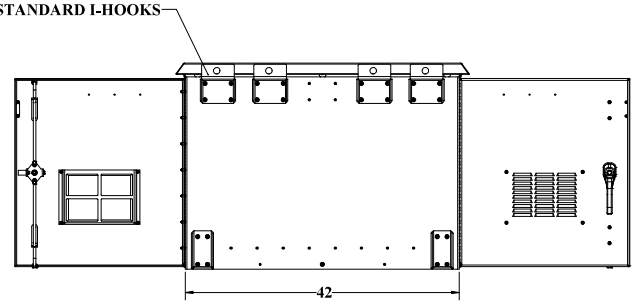

WEB DRAWING (NOT FOR FABRICATION)

UNLESS OTHERWISE SPECIFIED:		NAME	DATE	*DDB Unlimited Inc.*			
DIMENSIONS ARE IN INCHES	Model by:	DDB	6/4/2014	30D-XXXX			
ANGULAR: MACH ± BEND ± TWO PLACE DECIMAL ± THREE PLACE DECIMAL ±	Drawn by:	EdwardW	06/13/14	DWG, 30D, 30, DDX			
ALL EDGES ARE BREAK MATERIAL THICKNESS ±	Sales Rep.			SIZE	Cage Code:	DWG. NO.:	REV
MATERIAL: 5052-H32/H34 .125-.187M B209-04	Q.A. Appr.	troy	12/08/20	D	3S5Y5	00978	B
PAINT: Textured Super Deep Gloss Furniture Black	Prod.Mgr.	ClarkK	12/09/20	SCALE: 1:8	WEIGHT: 399 Lbs.		SHEET 1 OF 3
DO NOT SCALE DRAWING	Control Number:						

DDB FORM: 7.1-2 REV:F 05/02/19

UNCLASSIFIED PUBLIC

File Location: (DDB)\EPDM Vault:\
C:\DDB\Drawing Requests\Customers\DDB WEB DWG\30D Family WEB\DR-00978 (30D-30D WEB DWG)\

WEB DRAWING (NOT FOR FABRICATION)

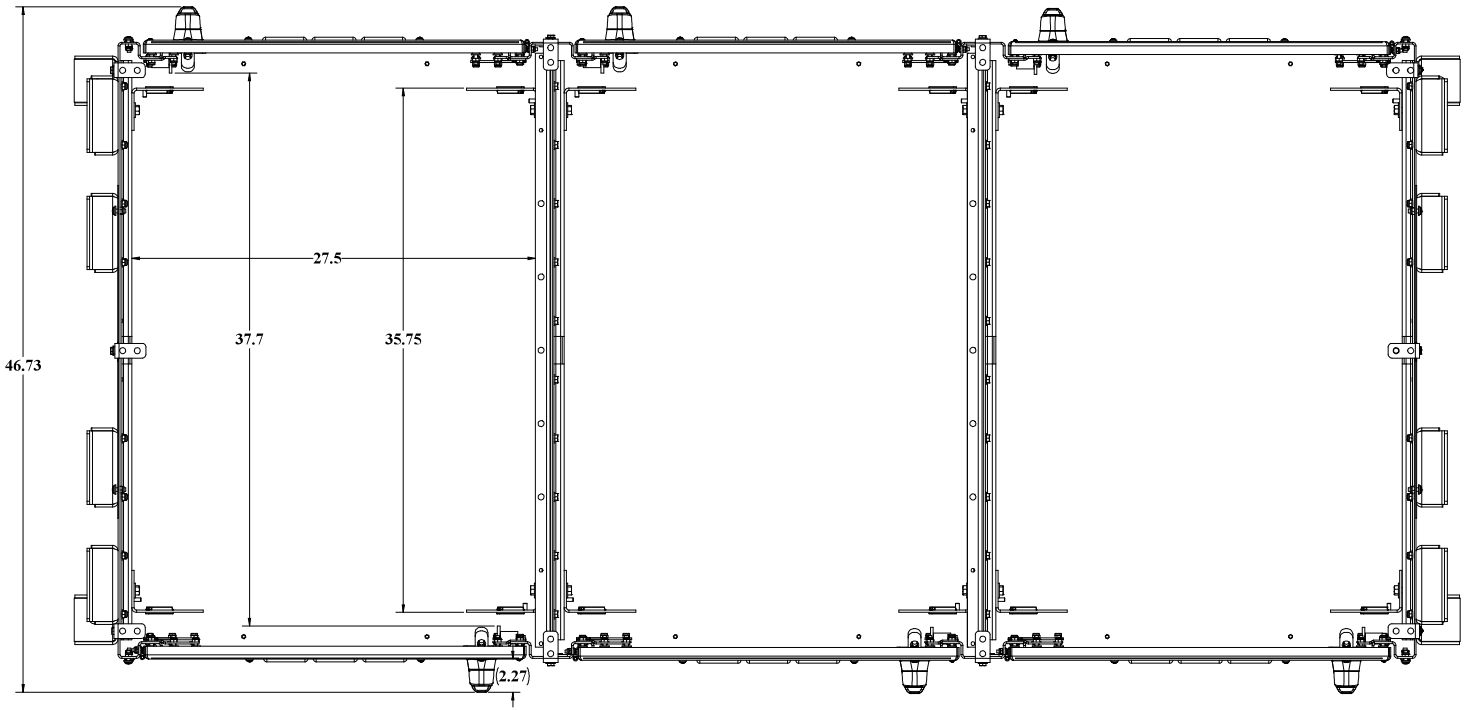

TOP VIEW SOLAR SHIELD AND CEILING NOT SHOWN

WEB DRAWING (NOT FOR FABRICATION)

UNLESS OTHERWISE SPECIFIED:	***DDB Unlimited Inc.***
DIMENSIONS ARE IN INCHES ANGULAR: ±1° FRACTIONAL/NO DECIMAL: ±0.1250 TWO PLACE DECIMAL: ± 0.0500 THREE PLACE DECIMAL: ± 0.0100 ALL HOLES ±0.0050	DDX Closed DWG, 30D, DOORS CLOSED
MATERIAL: 5052-H32XX 125-ASTM B209-94	SIZE: D | Cage Code: 385Y5 | DWG. NO.: 00978 | REV: B
PAINT: Diamond Vogel Beige Gloss Texture FT-0320	SCALE: 1:8 | WEIGHT: 678 lbs. | SHEET 2 OF 3
DO NOT SCALE DRAWING	

DDB FORM 7.1-REV.K 08/02/17

UNCLASSIFIED PUBLIC
THE INFORMATION CONTAINED IN THIS DRAWING IS THE SOLE PROPERTY OF DDB Unlimited, INC. ANY
REPRODUCTION IN PART OR AS A WHOLE WITHOUT THE WRITTEN PERMISSION OF DDB Unlimited, INC. IS PROHIBITED.

File Location: (DDB) (EPDM Vault:)
C:\DDB\Drawing Requests\Customers\DDB WEB DWG\30D Family WEB\DR-00978 (30D-30DDX

WEB DRAWING (NOT FOR FABRICATION)

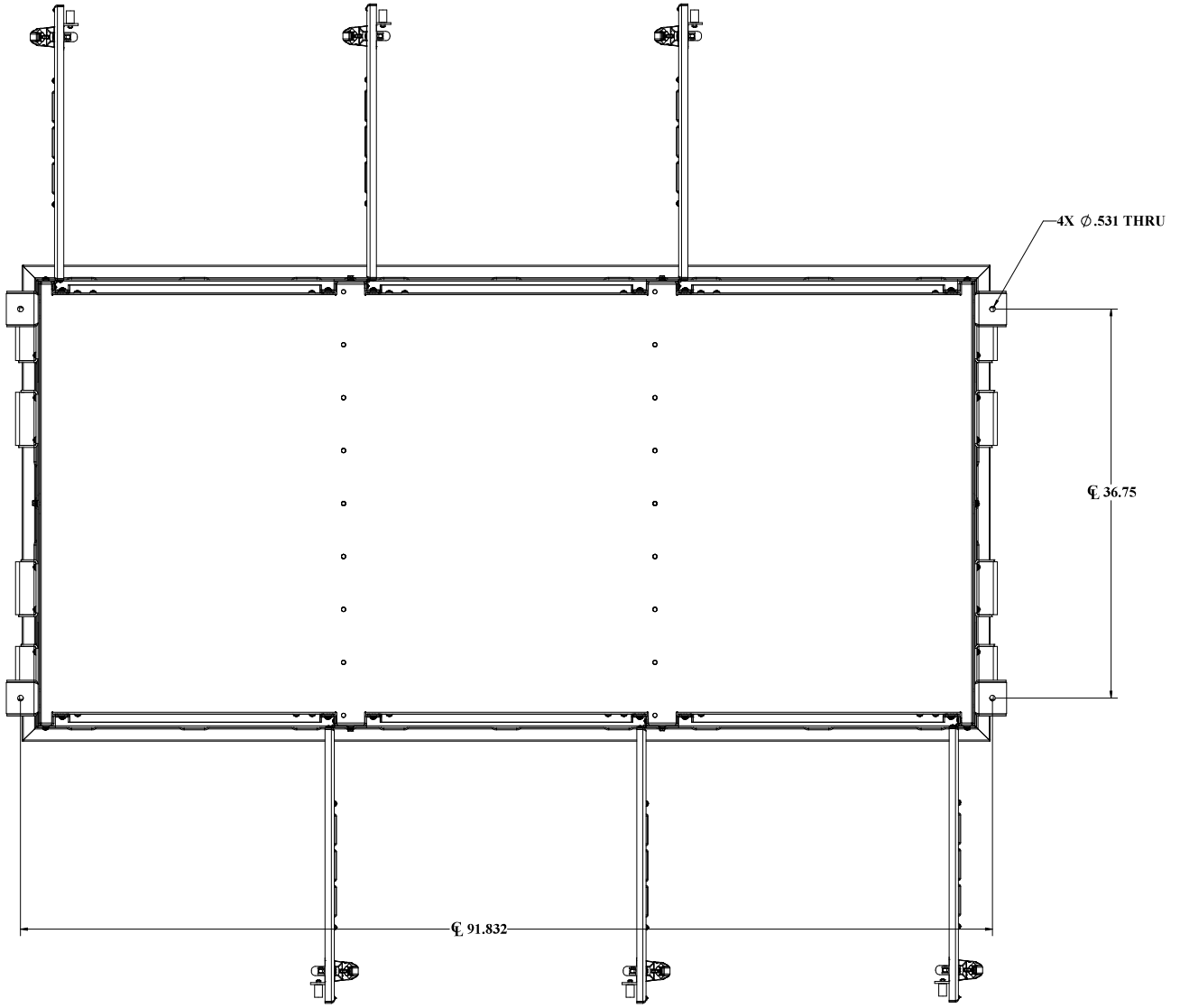

MOUNTING HOLES

WEB DRAWING (NOT FOR FABRICATION)

UNLESS OTHERWISE SPECIFIED:	DDB Unlimited Inc.			
DIMENSIONS ARE IN INCHES ANGULAR: ±1° FRACTIONAL/NO DECIMAL: ±0.1250 TWO PLACE DECIMAL: ±0.0100 THREE PLACE DECIMAL: ±0.0050 ALL HOLES ±0.0010	30D-30DDX DWG, 30D, 30, DDX			
	SIZE: D	Cage Code: 385Y5	DWG. NO.: 00978	REV: B
MATERIAL: 5052-H32/X-125-ASTM B209-94				
PAINT: Diamond Vogel Beige Gloss Texture FT-6320	SCALE: 1:8	WEIGHT: 399 lbs.	SHEET 3 OF 3	
DO NOT SCALE DRAWING				

DDB FORM 7.1-7 REV.K 08/02/17

UNCLASSIFIED PUBLIC
THE INFORMATION CONTAINED IN THIS DRAWING IS THE SOLE PROPERTY OF DDB Unlimited, INC. ANY
REPRODUCTION IN PART OR AS A WHOLE WITHOUT THE WRITTEN PERMISSION OF DDB Unlimited, INC. IS PROHIBITED.

File Location: (DDB) (EPDM Vault:)
C:\DDB\Drawing Requests\Customers\DDB WEB DWG\30D Family WEB\DR-00978 (30D-30DDX

3OD-50DXC

50" H x 88.5" W x 25" D (78 RU) Outdoor Enclosure

Click Here For More Information Online



General

Weight
- 353 Lbs. assembled
- 513 Lbs. shipping weight

Doors
- 6, secured by three point locking system
- Locks via customer supplied padlocks
- Sealed with .875" aluminum filled gaskets

Material
- .125" Alumiflex™
- Finish: Painted cream
- RF properties: Non-ferrous

Vents
- 30 bottom louvers per door
- 26 top louvers – In top cover-under Alumishield™
- One removable filter panel per door
- 26 fixed bug screens in top cover

Handles
- Stainless steel, padlocking

Lifting Hooks
- 4, standard

Racking Specifications

Rails
- Three sets standard (for additional rails see accessories)
- Alodine coated
- Holes tapped for 10-32 threads
- Each rail supported by three R-STRUTS™
- .160" Material (Alumiflex™)

Spacing
- 19" or 23" Racking available

Useable Height
- 45.5"

Useable Depth
- Maximum: 21.5" Minimum: 19.75"

Inside Clearance - Less Rails

Height
- 50"

Width
- 27.625" each side

Depth
- See racking specifications – Useable depth

Ratings

NEMA Class Types available
- Class 250 Type 3R

Paint Tested
- 1000 Hour salt spray (textured)
- 1000 Hour immersion

Door Opening Clearance

Height
- 46"

Width
- 23.625"

Exterior Cabinet Dimensions

Main Body
- Height: 50.5"
- Width: 88"
- Depth: 25"

Alumishield™
- Hang down height: 1.75"
- Width: 93.5"
- Depth: 29.5"

Handles
- Protrude 1.875"

Total Space Occupied
- Height: 50.5"
- Width: 88"
- Depth: 29"

	*Section Starting & Ending Points	Vertical Height Per section	Effective Depth For Each Section
Top	46.75" – 50.23"	3.25"	21.50"
	46.57" – 46.75"	.18"	20.50"
	31.00"- 46.57"	15.57"	21.50"
Center	19.00"-31.00"	12.00"	19.75"
	3.43" – 19.00"	15.57"	21.50"
	3.25" – 3.43"	.18"	20.50"
Bottom	0.00" – 3.25"	3.25"	21.50"

WEB DRAWING (NOT FOR FABRICATION)

REVISIONS		
REV.	DESCRIPTION	DATE
A	Initial Release per DR-	5/28/2014
B	UPDATED FORMAT	12/4/2020

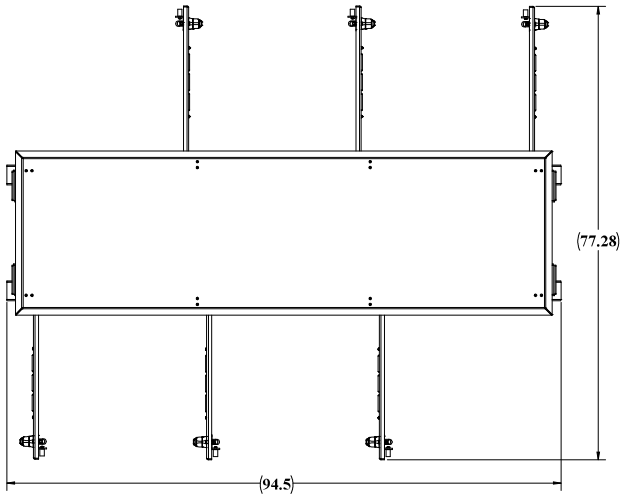

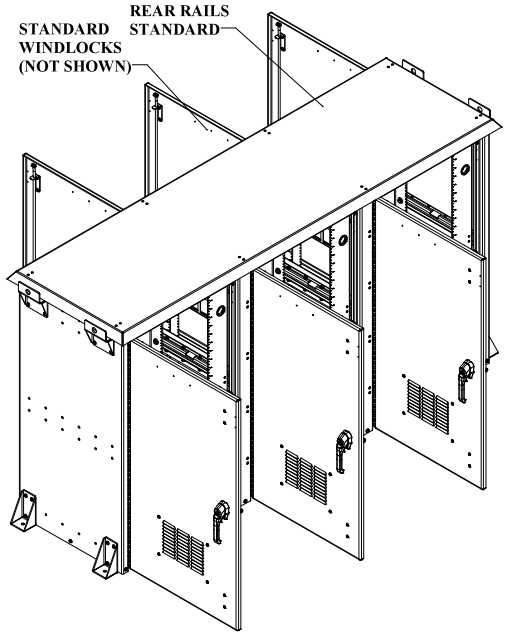

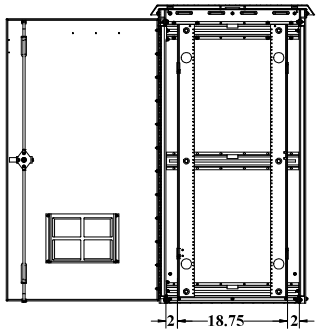

SECTION A-A
SCALE 1 : 10

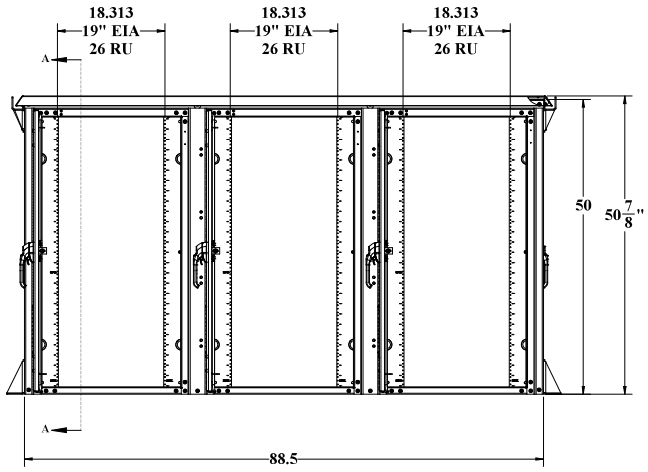

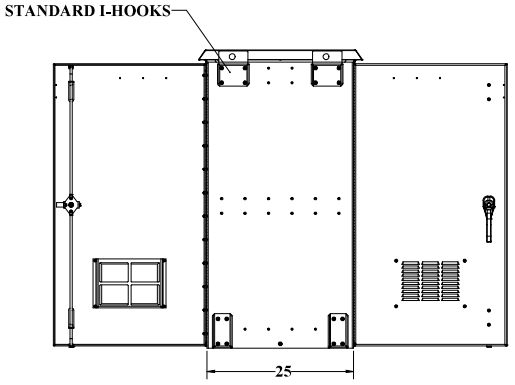

WEB DRAWING (NOT FOR FABRICATION)

UNLESS OTHERWISE SPECIFIED:		NAME	DATE	DDB Unlimited Inc.			
DIMENSIONS ARE IN INCHES	Model by:	DDB	6/4/2014	30D-XXXX			
ANGULAR: MACH ±1° BEND ±1° TWO PLACE DECIMAL ±.010 THREE PLACE DECIMAL ±.005	Drawn by:	EdwardW	06/13/16	DWG, 30D, 50, DX			
ALL EDGES @ 125 MATERIAL THICKNESS ±.139	Sales Rep.			SIZE	Cage Code:	DWG. NO.:	REV
	Q.A. Appr.	troy	12/08/20	D	3S5Y5	00979	B
MATERIAL: 5052-H32/H34.125-1ASTM B209-04	Prod.Mgr.	ClarkK	12/09/20				
PAINT: Textured Sand Beige Glen Farmer Cloud9	Control Number:			SCALE: 1:8	WEIGHT: 427 lbs.		SHEET 1 OF 3
DO NOT SCALE DRAWING							

DDB FORM: 7.1-2 REV:F 05/02/19

UNCLASSIFIED PUBLIC

File Location: (DDB)EPDM Vault:)
C:\DDB\Drawing Requests\Customers\DDB WEB DWG\30D Family WEB\DR-00979 (30D-50D WEB DWG)\

WEB DRAWING (NOT FOR FABRICATION)

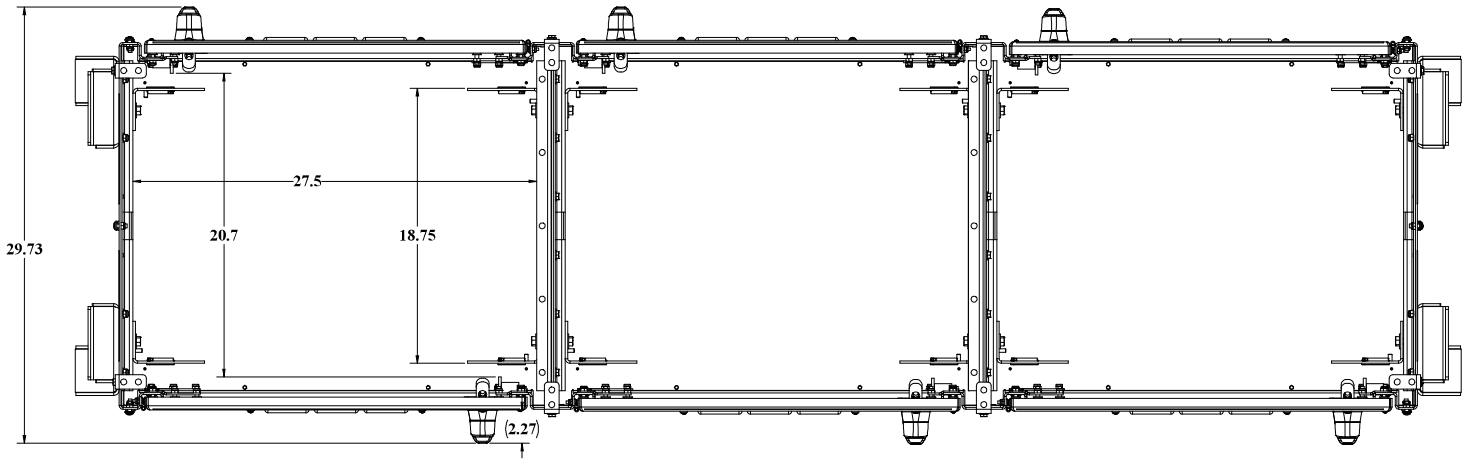

TOP VIEW SOLAR SHIELD AND CEILING NOT SHOWN

WEB DRAWING (NOT FOR FABRICATION)

UNLESS OTHERWISE SPECIFIED:	DDB Unlimited Inc.			
DIMENSIONS ARE IN INCHES ANGULAR: ±1° FRACTIONAL/NO DECIMAL: ±0.1250 TWO PLACE DECIMAL: ± 0.0250 THREE PLACE DECIMAL: ± 0.0100 ALL HOLES ±0.0050	DX Closed DWG, 3OD, DOORS CLOSED			
	SIZE	Cage Code:	DWG. NO.:	REV
MATERIAL: 5052-H32/5XX.X125-ASTM B209-94	D	3B5Y5	00979	B
PAINT: Diamond Vogel Beige Gloss Texture ET-6320	SCALE: 1:8	WEIGHT: 563 lbs.		SHEET 2 OF 3
DO NOT SCALE DRAWING				

DDB FORM 7.1-REV.K 08/02/17

UNCLASSIFIED PUBLIC
THE INFORMATION CONTAINED IN THIS DRAWING IS THE SOLE PROPERTY OF DDB Unlimited, INC. ANY
REPRODUCTION IN PART OR AS A WHOLE WITHOUT THE WRITTEN PERMISSION OF DDB Unlimited, INC. IS PROHIBITED.

File Location: (DDB)(EPDM Vault:)
C:\DDB\Drawing Requests\Customers\DDB WEB DWG\3OD Family WEB\DR-00979 (3OD-5ODX

WEB DRAWING (NOT FOR FABRICATION)

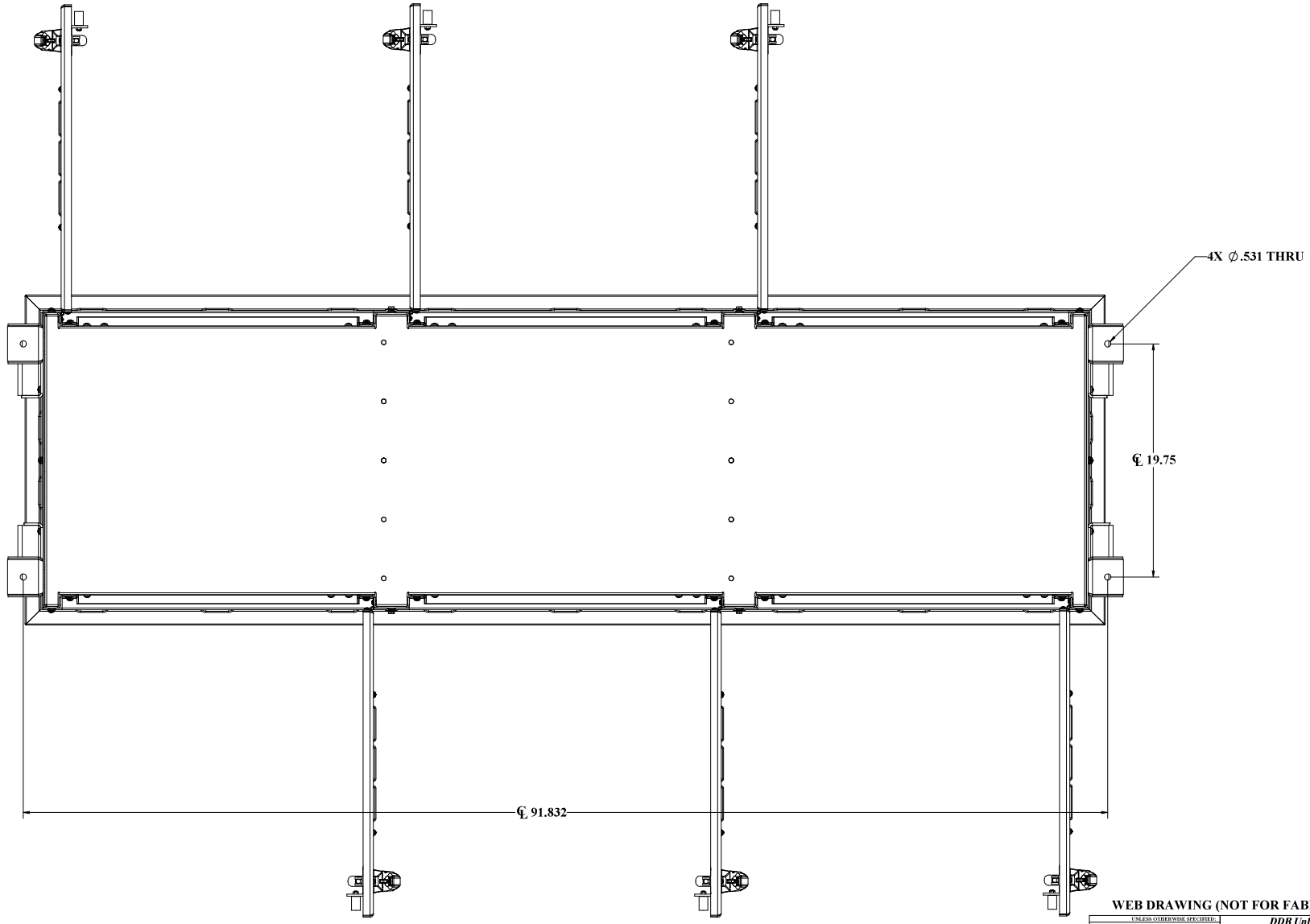

MOUNTNG HOLES

DDB FORM 7.1-7 REV.K 08/02/17

WEB DRAWING (NOT FOR FABRICATION)			
UNLESS OTHERWISE SPECIFIED: DIMENSIONS ARE IN INCHES. ANGULAR: FRACTIONAL: TWO PLACE DECIMAL: THREE PLACE DECIMAL: ALL HOLES ±0.005	***DDB Unlimited Inc.*** 30D-50DX DWG, 30D, 50, DX		
	SIZE: D	Cage Code: 385Y5	DWG. NO.: 00979 REV: B
MATERIAL: 5052-H32/6X.125-ASTM B209-94	SCALE: 1:8	WEIGHT: 427 lbs.	SHEET 3 OF 3
PAINT: Diamond Vogel Beige Gloss Texture FT-6320			
DO NOT SCALE DRAWING			

UNCLASSIFIED PUBLIC
THE INFORMATION CONTAINED IN THIS DRAWING IS THE SOLE PROPERTY OF DDB Unlimited, INC. ANY REPRODUCTION IN PART OR AS A WHOLE WITHOUT THE WRITTEN PERMISSION OF DDB Unlimited, INC. IS PROHIBITED.

File Location: (DDB)(EPDM Vault:)
C:\DDB\Drawing Requests\Customers\DDB WEB DWG\30D Family WEB\DR-00979 (30D-50DX

3OD-50DDC

50" H x 88.5" W x 34" D (78 RU) Outdoor Enclosure*

Click Here For More Information Online



* Front and Rear sets of rails allow some equipment to rack both directions providing up to 156 RU

General

Weight
- 424 Lbs. assembled
- 584 Lbs. shipping weight

Doors
- 6, secured by three point locking system
- Locks via customer supplied padlocks
- Sealed with .875" aluminum filled gaskets

Material
- .125" Alumiflex®
- Finish: Painted cream
- RF properties: Non-ferrous

Vents
- 30 bottom louvers per door
- 26 top louvers – In top cover, under Alumishield®
- One removable filter panel per door
- 26 fixed bug screens in top cover

Handles
- Stainless steel, padlocking

Lifting Hooks
- 6, standard

Racking Specifications

Rails
- Six sets standard (for additional rails see accessories)
- Alodine coated
- Holes tapped for 10-32 threads
- Each rail supported by three R-STRUTS™
- .160" Material (Alumiflex®)

Spacing
- 19" or 23" Racking available

Useable Height
- 45.8125"

Useable Depth
- Maximum: 30.5" Minimum: 28.75"

Inside Clearance - Less Rails

Height
- 50"

Width
- 27.625" each compartment

Depth
- See racking specifications – Useable depth

Ratings

NEMA Class Types available
- Class 250 Type 4X

Paint Tested
- 1000 Hour salt spray (textured)
- 1000 Hour immersion

Door Opening Clearance

Height
- 46"

Width
- 23.625"

Exterior Cabinet Dimensions

Main Body
- Height: 50.25"
- Width: 88"
- Depth: 34.25"

Alumishield®
- Hang down height: 1.75"
- Width: 93.5"
- Depth: 36.5"

Handles
- Protrude 1.875"

Total Space Occupied
- Height: 50.5"
- Width: 88"
- Depth: 38"

	*Section Starting & Ending Points	Vertical Height Per section	Effective Depth For Each Section
Top	46.75" – 50.23"	3.25"	21.50"
	46.57" – 46.75"	.18"	20.50"
	31.00"- 46.57"	15.57"	21.50"
Center	19.00"-31.00"	12.00"	19.75"
	3.43" – 19.00"	15.57"	21.50"
	3.25" – 3.43"	.18"	20.50"
Bottom	0.00" – 3.25"	3.25"	21.50"

WEB DRAWING (NOT FOR FABRICATION)

REVISIONS		
REV.	DESCRIPTION	DATE
A	Initial Release per DR-	5/28/2014
B	UPDATED FORMAT	12/7/2020

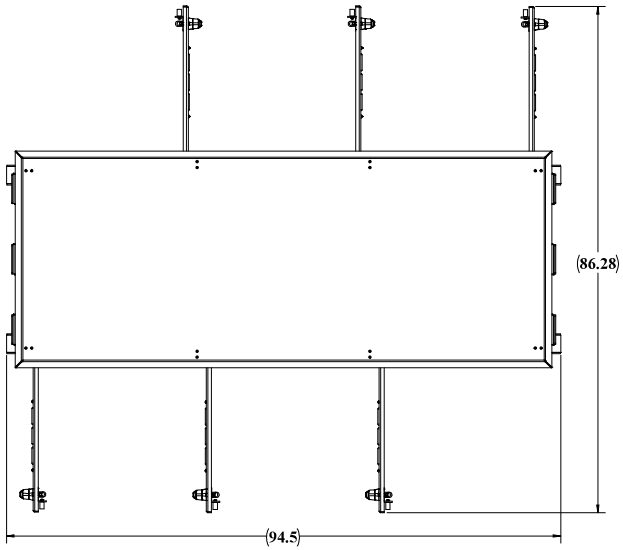

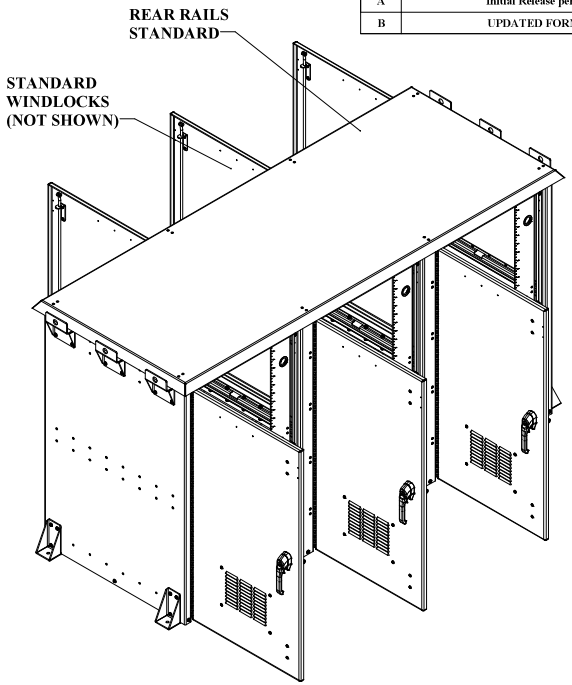

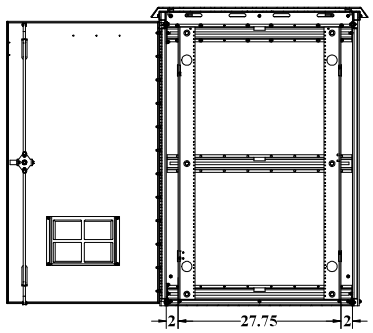

SECTION A--A
SCALE 1 : 10

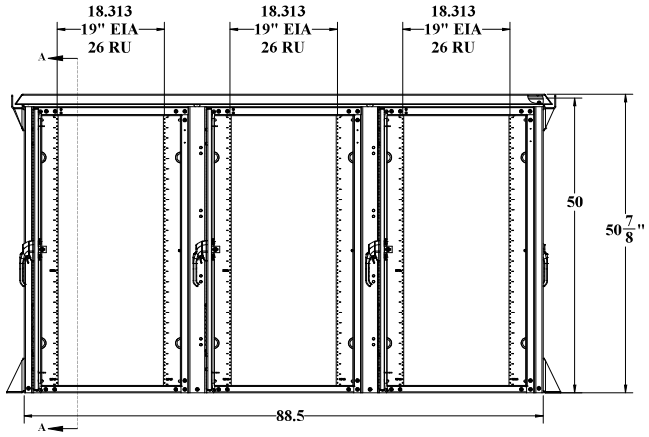

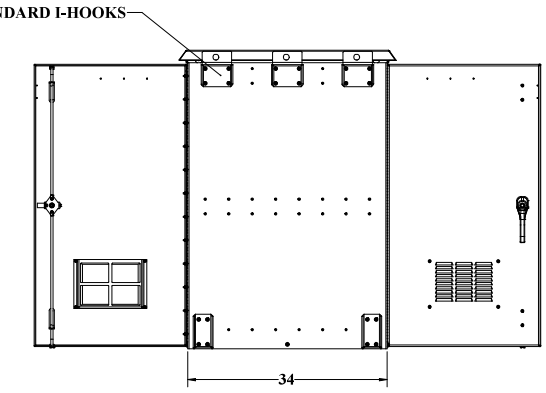

WEB DRAWING (NOT FOR FABRICATION)

UNLESS OTHERWISE SPECIFIED:		NAME	DATE	DDB Unlimited Inc.			
DIMENSIONS ARE IN INCHES	Model by:	DDB	6/4/2014	30D-XXXX			
ANGULAR: MACH ± BEND ± TWO PLACE DECIMAL ± THREE PLACE DECIMAL ±	Drawn by:	EdwardW	06/13/14	DWG, 30D, 50, DD			
ALL HOLES Ø MATERIAL THICKNESS ±	Sales Rep.			SIZE	Cage Code:	DWG. NO.:	REV
	Q.A. Appr.	troy	12/08/20	D	3S5Y5	00980	B
MATERIAL: 5052-H32/H34 .125-.187M B209-04	Prod.Mgr.	ClarkK	12/09/20				
PAINT: Textured Super Duty Gloss Powder Coat/Dry	Control Number:			SCALE: 1:8	WEIGHT: 482 lbs.		SHEET 1 OF 3
DO NOT SCALE DRAWING							

DDB FORM: 7-1-2 REV:F 05/02/19

UNCLASSIFIED PUBLIC

File Location: (DDB)EPDM Vault:)
C:\DDB\Drawing Requests\Customers\DDB WEB DWG\30D Family WEB\DR-00980 (30D-50D WEB DWG)\

WEB DRAWING (NOT FOR FABRICATION)

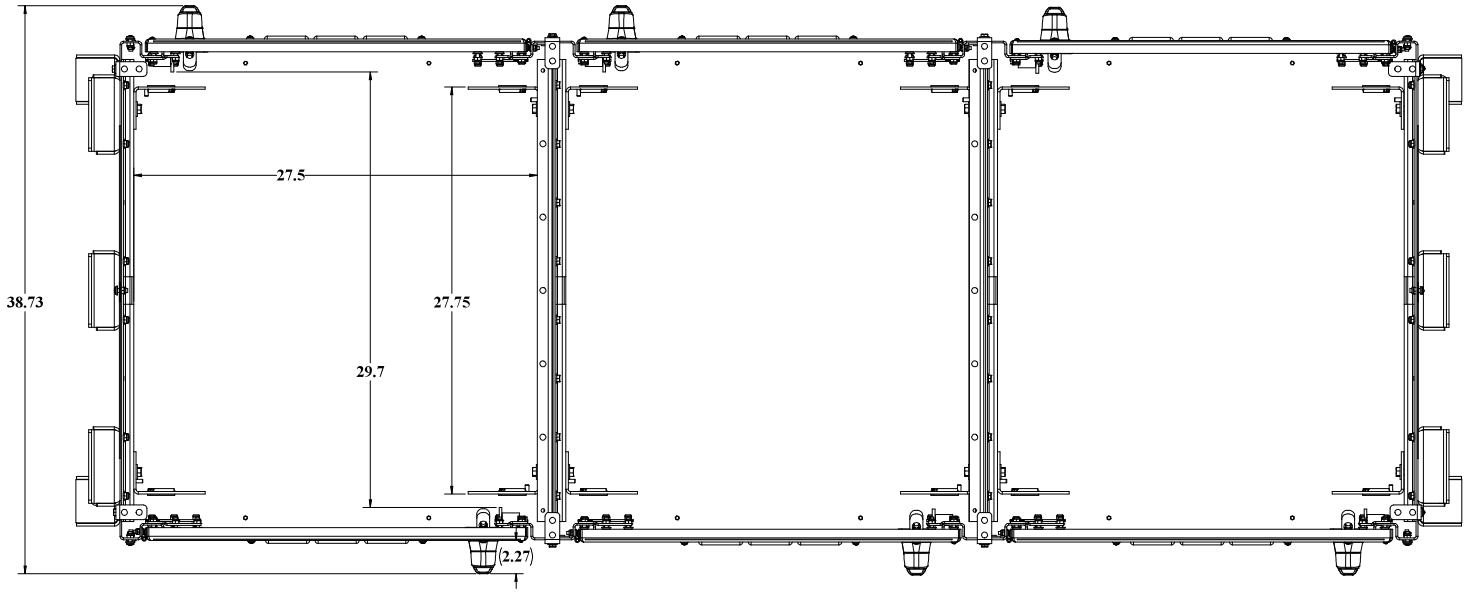

TOP VIEW SOLAR SHIELD AND CEILING NOT SHOWN

WEB DRAWING (NOT FOR FABRICATION)

UNLESS OTHERWISE SPECIFIED:	***DDB Unlimited Inc.***
DIMENSIONS ARE IN INCHES ANGULAR: ±1° FRACTIONAL/NO DECIMAL: ±0.1250 TWO PLACE DECIMAL: ± 0.0250 THREE PLACE DECIMAL: ± 0.0100 ALL EDGES ##BREAK##	DD Closed DWG, 3OD, DOORS CLOSED
MATERIAL: 5052-H32/5XX.X/2%-ASTM B209-94	SIZE: D | Cage Code: 3S5Y5 | DWG. NO.: 00980 | REV: B
PAINT: Diamond Vogel Beige Gloss Texture ET-6320	SCALE: 1:8 | WEIGHT: 624 lbs. | SHEET 2 OF 3
DO NOT SCALE DRAWING	

DDB FORM 7.1-7 REV.K 08/02/17

UNCLASSIFIED PUBLIC
THE INFORMATION CONTAINED IN THIS DRAWING IS THE SOLE PROPERTY OF DDB Unlimited, INC. ANY
REPRODUCTION IN PART OR AS A WHOLE WITHOUT THE WRITTEN PERMISSION OF DDB Unlimited, INC. IS PROHIBITED.

File Location: (DDB)(EPDM Vault:)
C:\DDB\Drawing Requests\Customers\DDB WEB DWG\3OD Family WEB\DR-00980 (3OD)-5ODD

WEB DRAWING (NOT FOR FABRICATION)

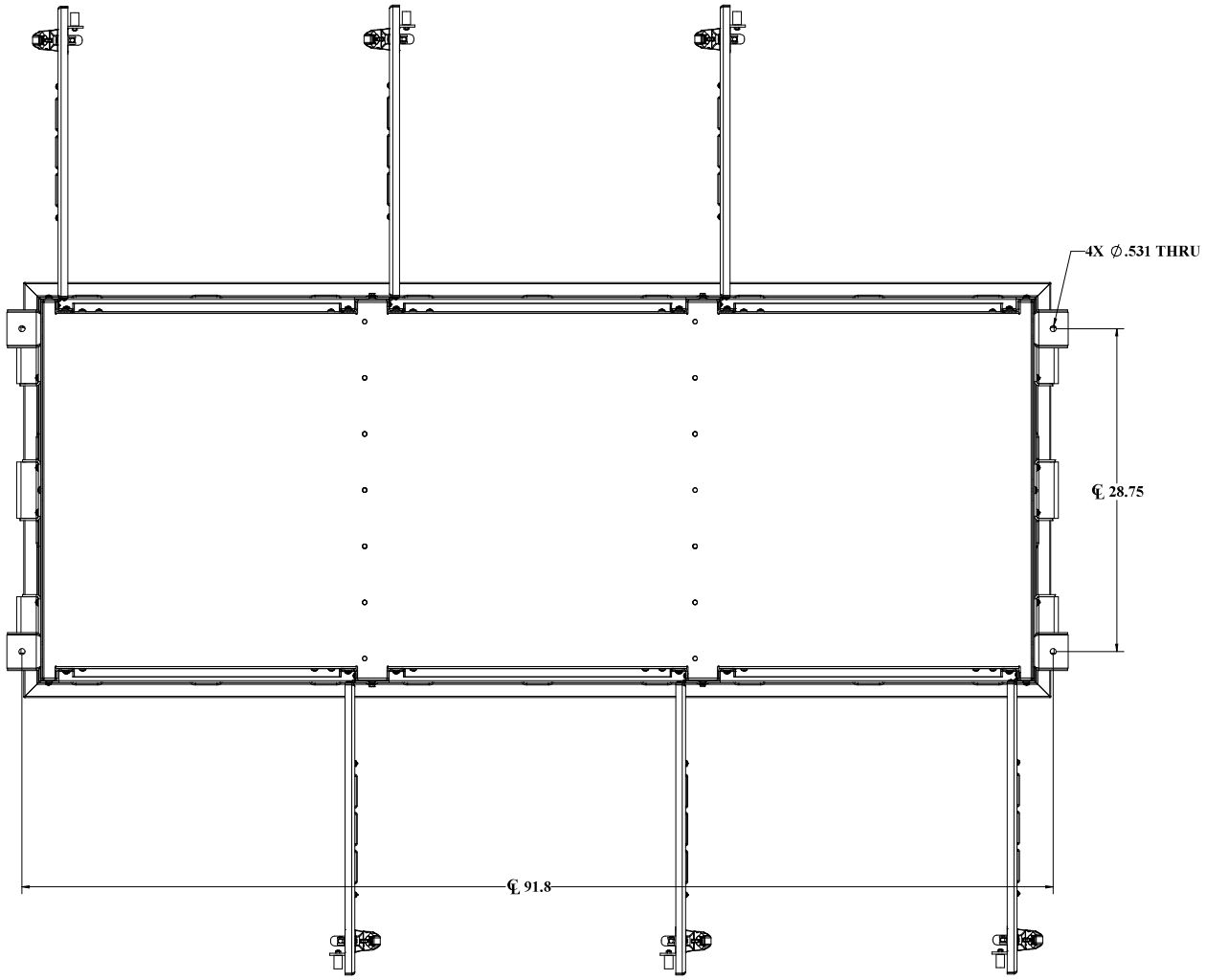

MOUNTNG HOLES

WEB DRAWING (NOT FOR FABRICATION)

UNLESS OTHERWISE SPECIFIED:	DDB Unlimited Inc.			
DIMENSIONS ARE IN INCHES ANGULAR: ±1° FRACTIONAL/NO DECIMAL: ±0.1250 TWO PLACE DECIMAL: ±.01250 THREE PLACE DECIMAL: ±.00500 ALL HOLES ±0.0010	30D-50DD DWG, 30D, 50, DD			
	SIZE	Cage Code:	DWG. NO.:	REV
MATERIAL: 5052-H32/6XX.T2S-ASTM B209-94	D	3S5Y5	00980	B
PAINT: Diamond Vogel Beige Gloss Texture ET-6320	SCALE: 1:8	WEIGHT: 482 lbs.		SHEET 3 OF 3
DO NOT SCALE DRAWING				

DDB FORM 7.1-REV.K 08/02/17

UNCLASSIFIED PUBLIC
THE INFORMATION CONTAINED IN THIS DRAWING IS THE SOLE PROPERTY OF DDB Unlimited, INC. ANY
REPRODUCTION IN PART OR AS A WHOLE WITHOUT THE WRITTEN PERMISSION OF DDB Unlimited, INC. IS PROHIBITED.

File Location: (DDB)(EPDM Vault:)
C:\DDB\Drawing Requests\Customers\DDB WEB DWG\30D Family WEB\DR-00980 (30D-50DD

An ISO 9001 Certified company

3OD Series

3OD-50DDXC

Made in America

Believing in American Craftsmanship

15 YEAR WARRANTY

Why Choose the 3OD Series?

When your project calls for a robust, spacious and dependable enclosure. Look no further than our 3OD series that will not only meet your needs but exceed them. Based on our tried and tested OD design the 3OD Series gives you all the benefits of the OD but without the size restriction. Allowing you to take on larger and more complex projects but also providing you with solutions for air flow, cable management and system to system connectivity.

The 3OD series comes with the versatile strut system for adjustable racking, the security of a 3-point locking system, and our Alumishield® solar cap to manage heat loads. Our 3OD series can be complimented with any of our available climate control solutions and fitted with project useful accessories. Our design is purpose driven with two objectives in mind, to ease the installation process which saves you time and money and to make sure your equipment is secure once you close the doors on your enclosure.

DDB offers a state-of-the-art design, a competitive price, benchmark lead times and a guaranteed delivery, all backed up with an industry leading 15-year warranty on every enclosure. Put DDB's substantial stock to work for you today. Contact our professional staff to assist you with your made-to-order solution.



Features

0.160” Aluminum Construction Doors

3 Bay Solution

Stainless Steel External Hardware/Hinge

3 Point Lock System

Front & Rear Door Access

Custom Colors Available

Cream Powder Coat In Stock

Flexible and Scalable

15 Year Warranty

Quick Shipping

Application Types

Telecommunications
Wireless/Broadband
Fiber Optics
Back Haul
Small Cell/DAS
Public Safety
Utility
Base Station
Military
Trailer-Based
Communications WiFi
LTEE/4G/5G



Industry Standards:

NEMA 250, Type 3R

Weight and Dimensions

Approximate Exterior Enclosure Dimensions:

51"H x 95"W x 42"D

Shipping Dimensions:

54”W x 102”L

Approximate Shipping Weight:

760 lbs.

2301 S. HWY 77 Pauls Valley, OK 73075
T: (800) 753-8459 – F: (877) 220-7236
sales@ddbunlimited.com www.ddbunlimited.com

DDB UNLIMITED®

An ISO 9001 Certified company

3OD Series

3OD-50DDXC

Made in America

Believing in American Craftsmanship



Features

1. Solar Shield (Alumishield)
2. Front and Rear 19” and 23” Reversable Racking Rails
3. Front & Rear Access Door
4. 6 Qty Lifting Hooks
5. 4 Qty Pad Mounting Feet
6. Powder-Coat Cream
7. Reusable Vent Filters

2301 S. HWY 77 Pauls Valley, OK 73075
T: (800) 753-8459 – F: (877) 220-7236
sales@ddbunlimited.com www.ddbunlimited.com

WEB DRAWING (NOT FOR FABRICATION)

REVISIONS		
REV.	DESCRIPTION	DATE
A	Initial Release per DR-	5/28/2014
B	UPDATED FORMAT	12/7/2020

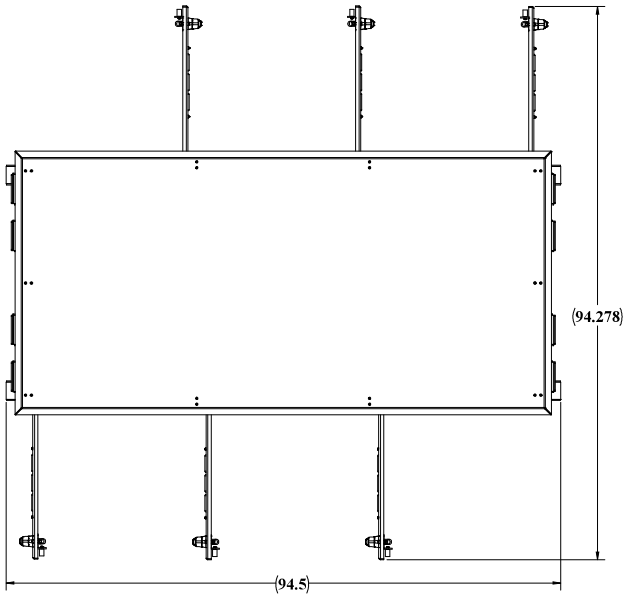

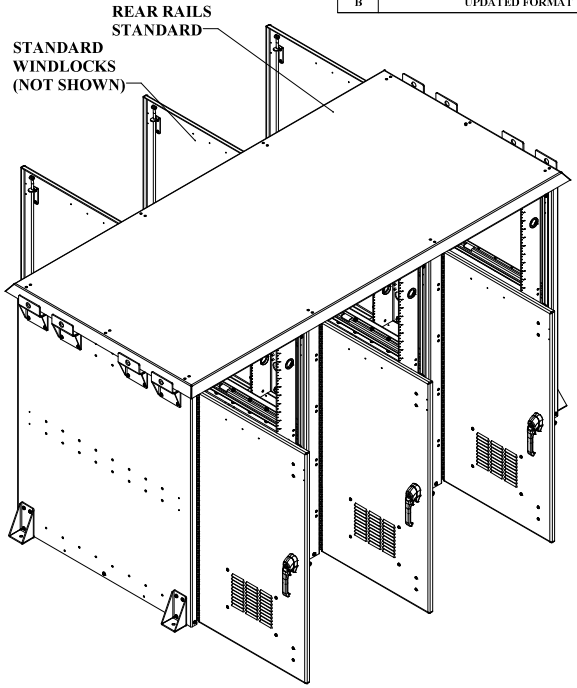

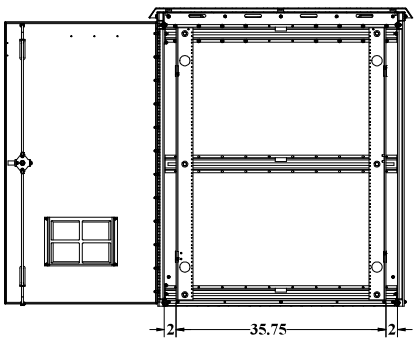

SECTION A-A
SCALE 1 : 10

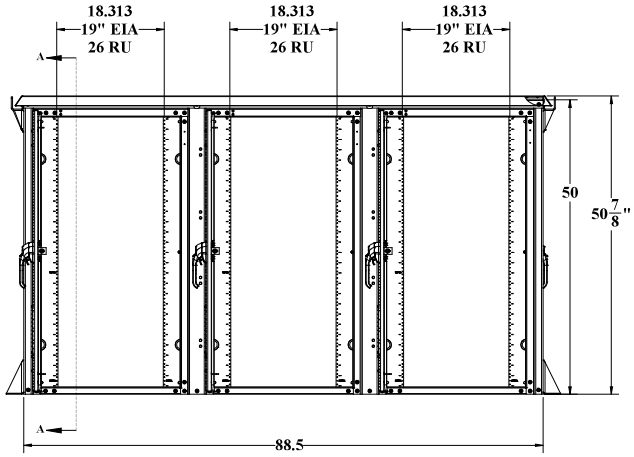

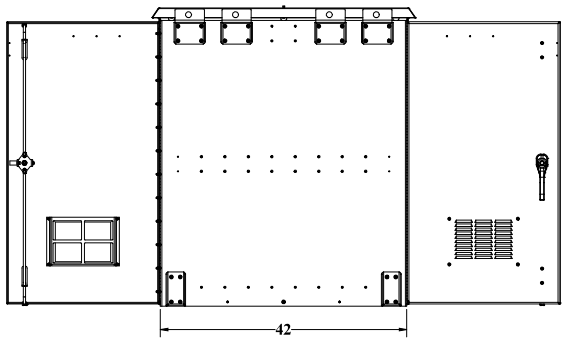

WEB DRAWING (NOT FOR FABRICATION)

UNLESS OTHERWISE SPECIFIED:		NAME	DATE	DDB Unlimited Inc.			
DIMENSIONS ARE IN INCHES	Model by:	DDB	6/4/2014	30D-XXXX			
ANGULAR: MACH ± BEND ± 1°	Drawn by:	EdwardW	06/13/14	DWG, 30D, 50, DDX			
TWO PLACE DECIMAL: ± .010	Sales Rep.			SIZE	Cage Code:	DWG. NO.:	REV
THREE PLACE DECIMAL: ± .005	Q.A. Appr.	troy	12/08/20	D	3S5Y5	00981	B
ALL HOLES ±.005	Prod.Mgr.:	ClarkK	12/09/20				
MATERIAL THICKNESS: ± .127				SCALE: 1:8	WEIGHT: 531 lbs.		SHEET 1 OF 3
MATERIAL: 5052-H32X.125-ASTM B209-04							
PAINT: Textured Sand Strike Gloss Texture 15x070							
DO NOT SCALE DRAWING	Control Number:						

UNCLASSIFIED PUBLIC

File Location: (DDB)[PDM Vault]
C:\DDB\Drawing Requests\Customers\DDB WEB DWG\30D Family WEB\DR-00981 (30D-50D WEB DWG)\

DDB FORM 7.1-2 REV.F 05/02/19

WEB DRAWING (NOT FOR FABRICATION)

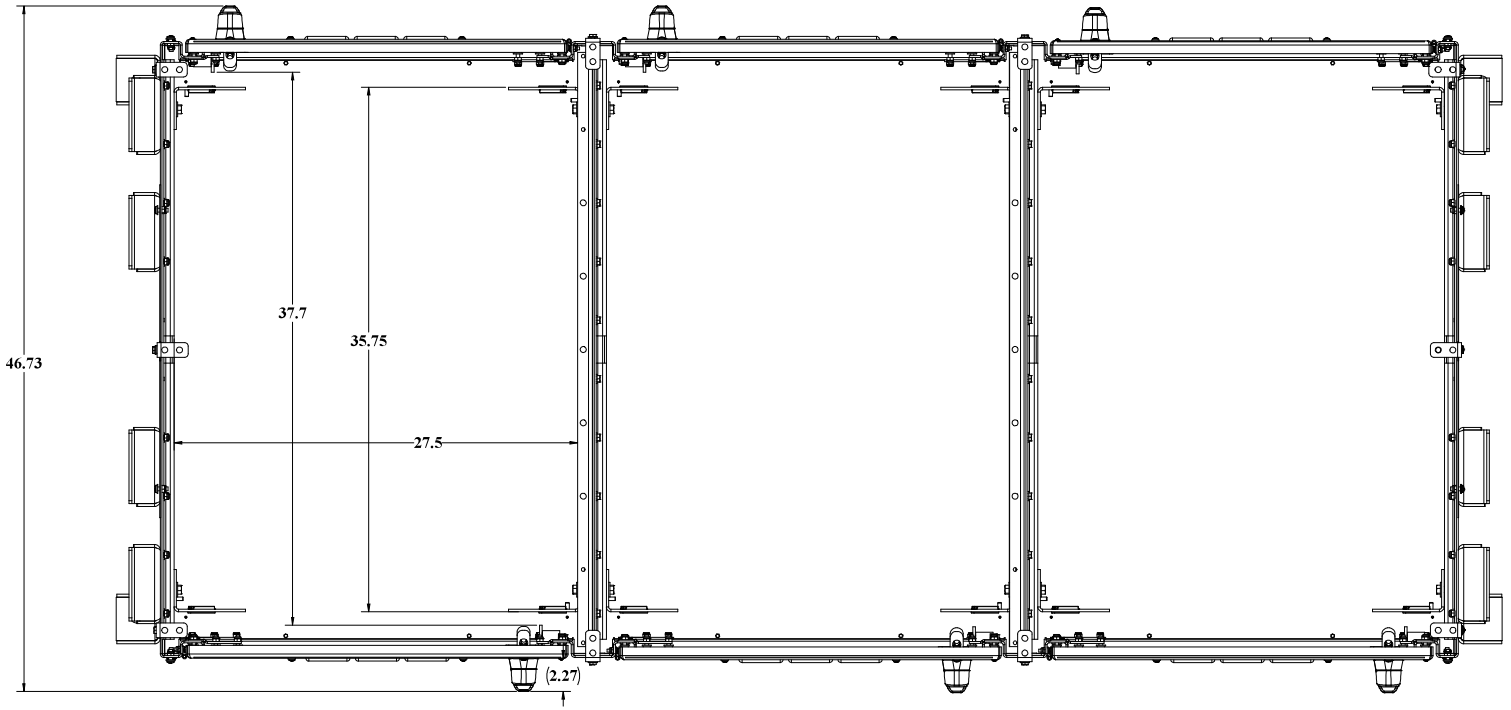

TOP VIEW SOLAR SHIELD AND CEILING NOT SHOWN

WEB DRAWING (NOT FOR FABRICATION)

UNLESS OTHERWISE SPECIFIED:	***DDB Unlimited Inc.***
DIMENSIONS ARE IN INCHES ANGULAR: ±1° FRACTIONAL/NO DECIMAL: ±0.1250 TWO PLACE DECIMAL: ±0.0500 THREE PLACE DECIMAL: ±0.0100 ALL EDGES #100RMS	DDX Closed DWG, 30D, DOORS CLOSED
MATERIAL: 5052-H32 EN. 12-ASTM B209-04	SIZE: D · Cage Code: 385Y5 · DWG. NO.: 00981 · REV: B
PAINT: Diamond Vogel Beige Gloss Texture FT-0320	SCALE: 1:8 · WEIGHT: · SHEET 2 OF 3
DO NOT SCALE DRAWING	

DDB FORM 7.1-7 REV.K 08/02/17

UNCLASSIFIED PUBLIC
THE INFORMATION CONTAINED IN THIS DRAWING IS THE SOLE PROPERTY OF DDB Unlimited, INC. ANY
REPRODUCTION IN PART OR AS A WHOLE WITHOUT THE WRITTEN PERMISSION OF DDB Unlimited, INC. IS PROHIBITED.

File Location: (DDB) EPDM Vault:
C:\DDB\Drawing Requests\Customers\DDB WEB DWG\30D Family WEB\DR-00981 (30D-50DDX

WEB DRAWING (NOT FOR FABRICATION)

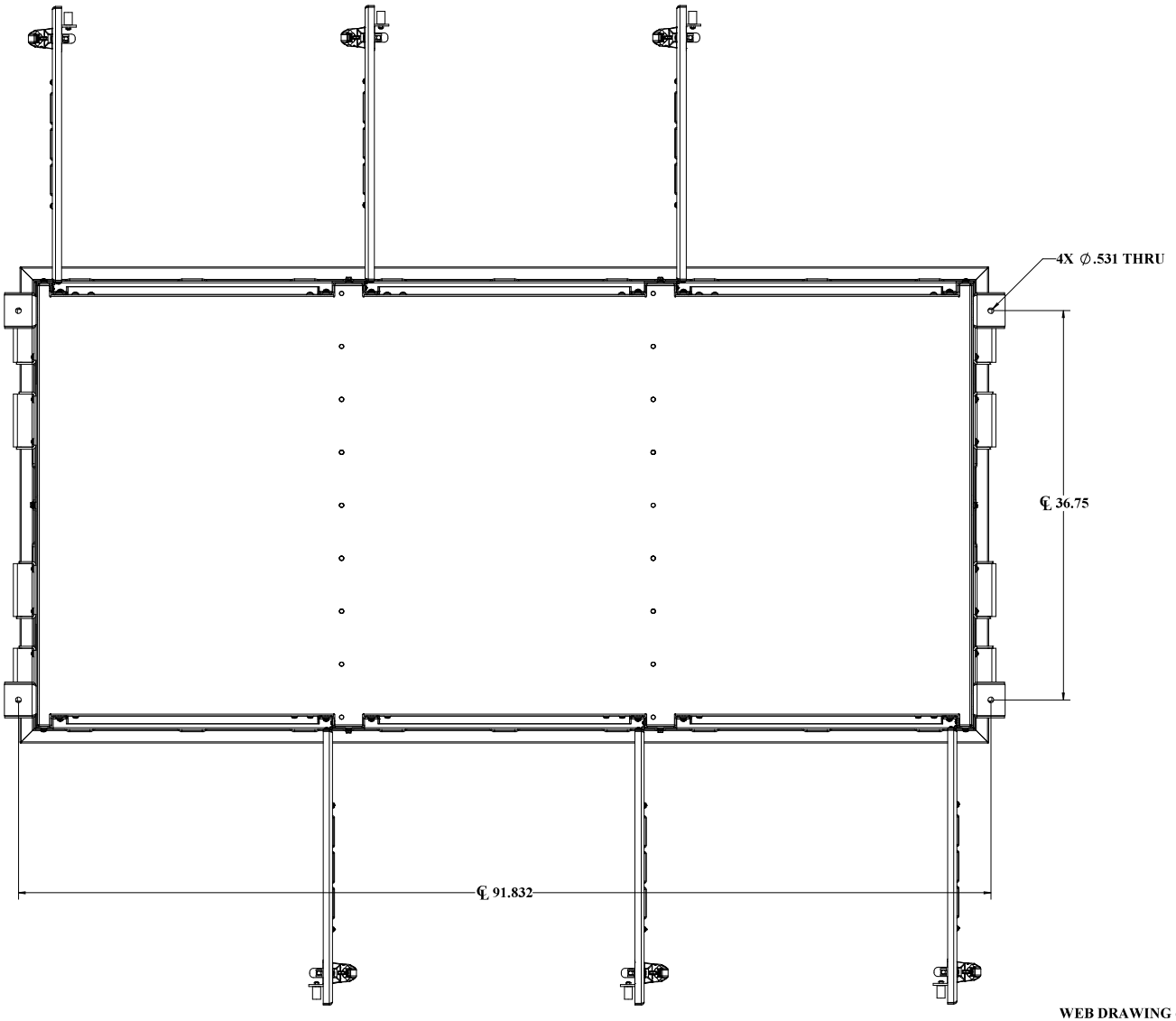

MOUNTING HOLES

WEB DRAWING (NOT FOR FABRICATION)

UNLESS OTHERWISE SPECIFIED:	*DDB Unlimited Inc.*			
DIMENSIONS ARE IN INCHES ANGULAR: ±1° FRACTIONAL/NO DECIMAL: ±0.125 TWO PLACE DECIMAL: ±0.010 THREE PLACE DECIMAL: ±0.005 ALL EDGES ⌀0.005Ⓜ	30D-50DDX DWG, 30D, 50, DDX			
	SIZE	Cage Code:	DWG. NO.:	REV
MATERIAL: 5052-H32 EN. 12-ASTM B209-04	D	3S5Y5	00981	B
PAINT: Diamond Vogel Beige Gloss Texture FT-0320	SCALE: 1:8	WEIGHT:		SHEET 3 OF 3
DO NOT SCALE DRAWING				

DDB FORM 7.1-REV.K 08/02/17

UNCLASSIFIED PUBLIC
THE INFORMATION CONTAINED IN THIS DRAWING IS THE SOLE PROPERTY OF DDB Unlimited, INC. ANY
REPRODUCTION IN PART OR AS A WHOLE WITHOUT THE WRITTEN PERMISSION OF DDB Unlimited, INC. IS PROHIBITED.

File Location: (DDB) (EPDM Vault)
C:\DDB\Drawing Requests\Customers\DDB WEB DWG\30D Family WEB\DR-00981 (30D-50DDX

3OD-62DXC

62" H x 88.5" W x 25" D (99 RU) Outdoor Enclosure

Click Here For More Information Online



General

Weight
- 407 Lbs. assembled
- 567 Lbs. shipping weight

Doors
- 6, secured by three point locking system
- Locks via customer supplied padlocks
- Sealed with .875" aluminum filled gaskets

Material
- .125" Alumiflex™
- Finish: Painted cream
- RF properties: Non-ferrous

Vents
- 30 bottom louvers per door
- 24 top louvers – In top cover, under Alumishield™
- One removable filter panel per door
- 24 fixed bug screens in top cover

Handles
- Stainless steel, padlocking

Lifting Hooks
- 4, standard

Racking Specifications

Rails
- Six sets standard (for additional rails see accessories)
- Alodine coated
- Holes tapped for 10-32 threads
- Each rail supported by three R-STRUTS™
- .160" Material (Alumiflex™)

Spacing
- 19" or 23" Racking available

Useable Height
- 57.75"

Useable Depth
- Maximum: 21.5" Minimum: 19.75"

Inside Clearance - Less Rails

Height
- 62"

Width
- 27.625" each compartment

Depth
- See racking specifications – Useable depth

Ratings

NEMA Class Types available
- Class 250 Type 4X

Paint Tested
- 1000 Hour salt spray (textured)
- 1000 Hour immersion

Door Opening Clearance

Height
- 58.25"

Width
- 23.625"

Exterior Cabinet Dimensions

Main Body
- Width: 88"
- Height: 62.48"
- Depth: 25.25"

Alumishield™
- Hang down height: 1.75"
- Width: 93.5"
- Depth: 29.5"

Handles
- Protrude 1.875"

Total Space Occupied
- Height: 63.105"
- Width: 88"
- Depth: 29"

	*Section Starting & Ending Points	Vertical Height Per section	Effective Depth For Each Section
Top	58.75" – 62.48"	3.25"	21.50"
	58.57" – 58.75"	.18"	20.50"
	37.00" – 58.57"	21.57	21.50"
Center	19.00"-31.00"	12.00"	19.75"
	3.43" – 25.00"	21.57	21.50"
	3.25" – 3.43"	.18"	20.50"
Bottom	0.00" – 3.25"	3.25"	21.50"

WEB DRAWING (NOT FOR FABRICATION)

REVISIONS		
REV.	DESCRIPTION	DATE
A	Initial Release per DR-	5/28/2014
B	Updated Format	12/7/2020

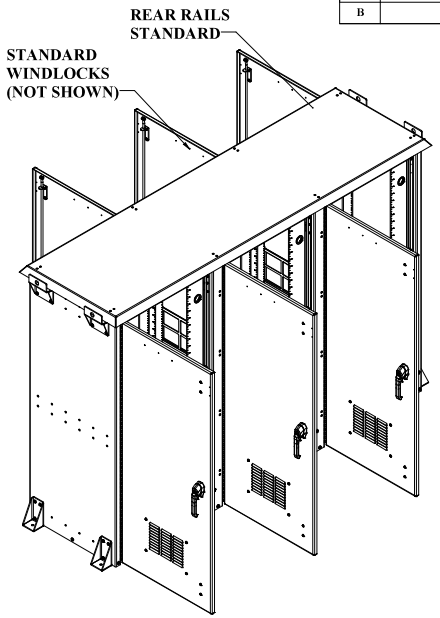

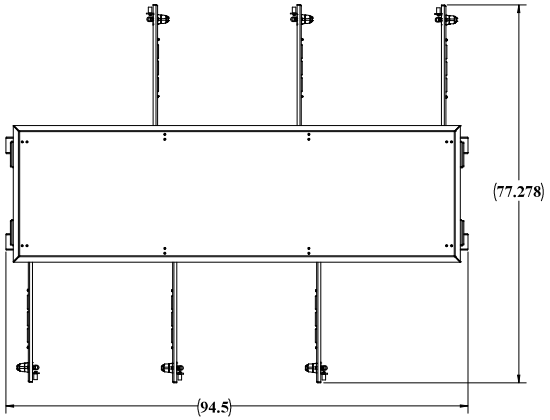

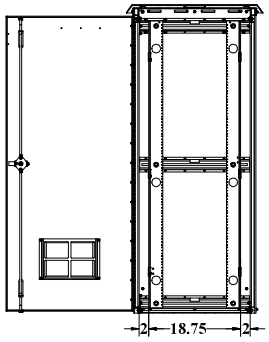

SECTION A-A
SCALE 1 : 12

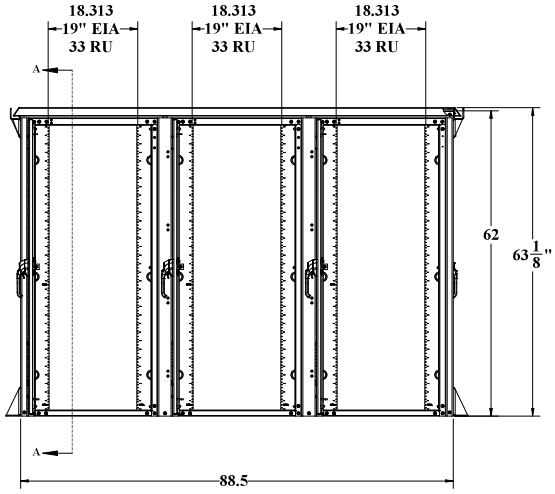

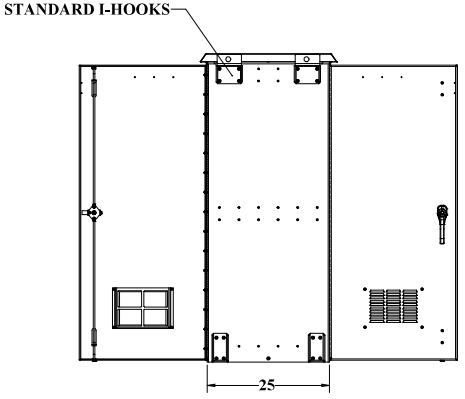

WEB DRAWING (NOT FOR FABRICATION)

UNLESS OTHERWISE SPECIFIED:		NAME	DATE	*DDB Unlimited Inc.*			
DIMENSIONS ARE IN INCHES	Modeled by:	DDB	6/4/2014	30D-XXXX			
ANGULAR: MACH ± BEND ± TWO PLACE DECIMAL ± THREE PLACE DECIMAL ±	Drawn by:	EdwardW	06/13/14	DWG, 30D, 62, DX			
ALL EDGES TO BE ○ MATERIAL THICKNESS ±	Sales Rep.						
	Q.A. Appr.	troy	12/08/20	SIZE	Cage Code:	DWG. NO.:	REV
MATERIAL: 5052-H32/5A 125-145TM B209-04	Prod.Mgr.:	ClarkK	12/09/20	D	3S5Y5	00982	B
PAINT: Textured Super Deep Gloss Powder Coat/Clr	Control Number:			SCALE: 1:8	WEIGHT: 495 lbs.		SHEET 1 OF 3
DO NOT SCALE DRAWING							

DDB FORM 7.1-2 REV.F 05/02/19

UNCLASSIFIED PUBLIC

File Location: (DDB)EPDM Vault:)
C:\DDB\Drawing Requests\Customers\DDB WEB DWG\30D Family WEB\DR-00982 (30D-62D WEB DWG)\

WEB DRAWING (NOT FOR FABRICATION)

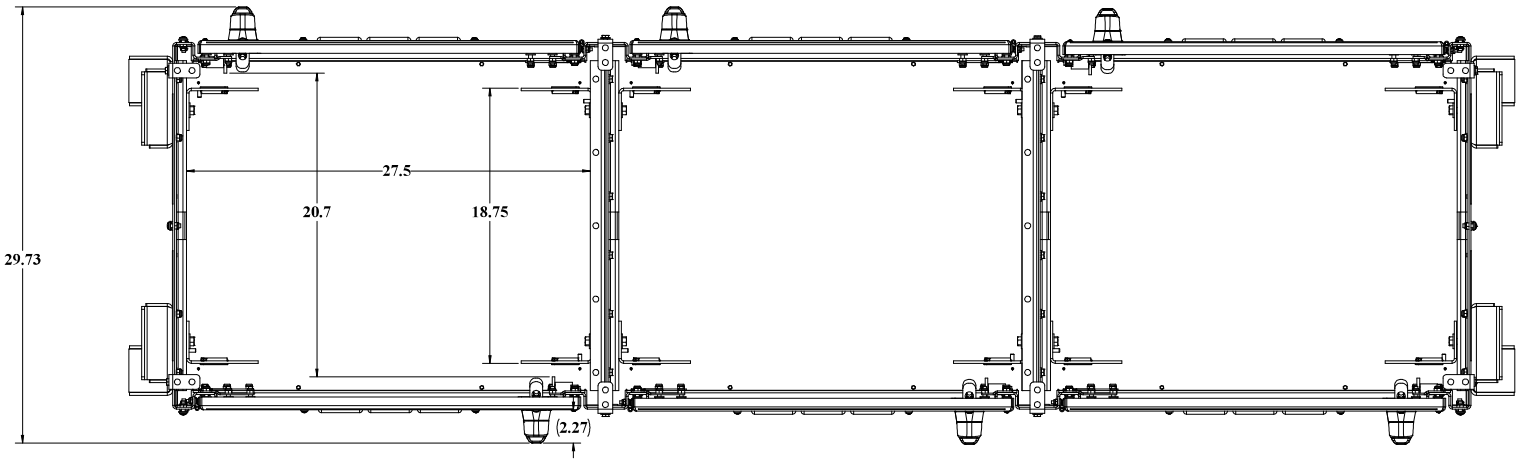

TOP VIEW SOLAR SHIELD AND CEILING NOT SHOWN

WEB DRAWING (NOT FOR FABRICATION)

UNLESS OTHERWISE SPECIFIED:	DDB Unlimited Inc.			
DIMENSIONS ARE IN INCHES ANGULAR: ±1° FRACTIONAL/NO DECIMAL: ±0.1250 TWO PLACE DECIMAL: ±0.0500 THREE PLACE DECIMAL: ±0.0100 ALL EDGES ⌀0.0030Ⓜ	DX Closed DWG, 3OD, DOORS CLOSED			
	SIZE	Cage Code:	DWG. NO.:	REV
MATERIAL: 5052-H32XX 125-ASTM B209-94	D	3S5Y5	00982	B
PAINT: Diamond Vogel Beige Gloss Texture FT-6320	SCALE: 1:8	WEIGHT: 563 lbs.		SHEET 2 OF 3
DO NOT SCALE DRAWING				

DDB FORM 7.1-7 REV.K 08/02/17

UNCLASSIFIED PUBLIC
THE INFORMATION CONTAINED IN THIS DRAWING IS THE SOLE PROPERTY OF DDB Unlimited, INC. ANY
REPRODUCTION IN PART OR AS A WHOLE WITHOUT THE WRITTEN PERMISSION OF DDB Unlimited, INC. IS PROHIBITED.

File Location: (DDB)(EPDM Vault:)
C:\DDB\Drawing Requests\Customers\DDB WEB DWG\3OD Family WEB\DR-00982 (3OD-62DX

WEB DRAWING (NOT FOR FABRICATION)

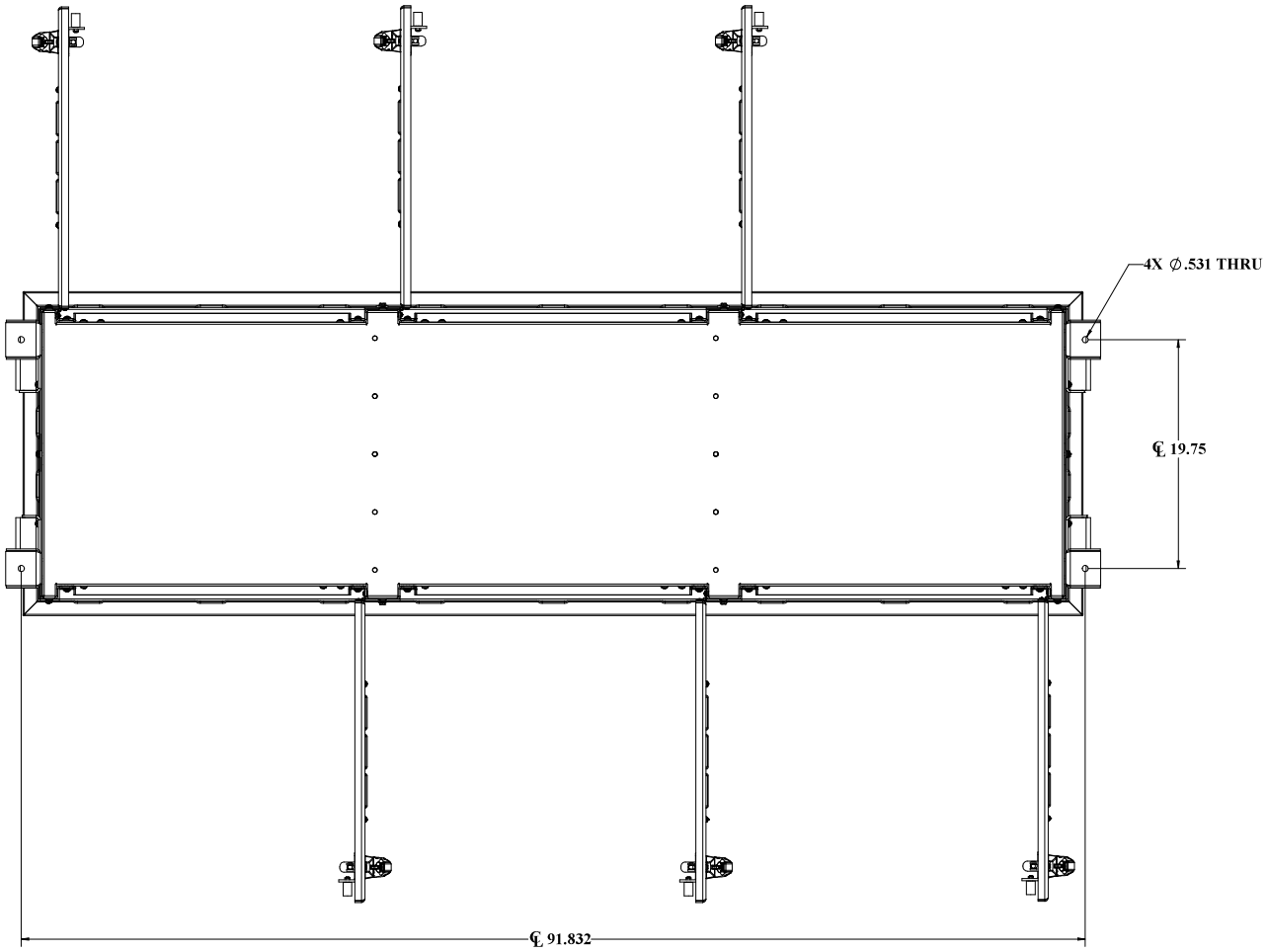

MOUNTING HOLES

WEB DRAWING (NOT FOR FABRICATION)

UNLESS OTHERWISE SPECIFIED:	*DDB Unlimited Inc.*			
DIMENSIONS ARE IN INCHES ANGULAR: ±1° FRACTIONAL/NO DECIMAL: ±0.1250 TWO PLACE DECIMAL: ±.01250 THREE PLACE DECIMAL: ±.00500 ALL EDGES #180SB	30D-62DX DWG, 30D, 62, DX			
	SIZE: D	Cage Code: 385Y5	DWG. NO.: 00982	REV: B
MATERIAL: 5052-H32XX 125-ASTM B209-94				
PAINT: Diamond Vogel Beige Gloss Texture FT-0320	SCALE: 1:8	WEIGHT: 495 lbs.	SHEET 3 OF 3	
DO NOT SCALE DRAWING				

DDB FORM 7.1-REV.K 08/02/17

UNCLASSIFIED PUBLIC
THE INFORMATION CONTAINED IN THIS DRAWING IS THE SOLE PROPERTY OF DDB Unlimited, INC. ANY
REPRODUCTION IN PART OR AS A WHOLE WITHOUT THE WRITTEN PERMISSION OF DDB Unlimited, INC. IS PROHIBITED.

File Location: (DDB)(EPDM Vault:)
C:\DDB\Drawing Requests\Customers\DDB WEB DWG\30D Family WEB\DR-00982 (30D-62DX

3OD-62DDC

62" H x 88.5" W x 34" D (99 RU) Outdoor Enclosure*

Click Here For More Information Online



* Front and Rear sets of rails allow some equipment to rack both directions providing up to 198 RU

General

Weight
- 481 Lbs. assembled
- 641 Lbs. shipping weight

Doors
- 6, secured by three point locking system
- Locks via customer supplied padlocks
- Sealed with .875" aluminum filled gaskets

Material
- .125" Alumiflex®
- Finish: Painted cream
- RF properties: Non-ferrous

Vents
- 30 bottom louvers per door
- 24 top louvers – In top cover, under Alumishield®
- One removable filter panel per door
- 24 fixed bug screens in top cover

Handles
- Stainless steel, padlocking

Lifting Hooks
- 6, standard

Racking Specifications

Rails
- Six sets standard (for additional rails see accessories)
- Alodine coated
- Holes tapped for 10-32 threads
- Each rail supported by three R-STRUTS™
- .160" Material (Alumiflex®)

Spacing
- 19" or 23" Racking available

Useable Height
- 57.75"

Useable Depth
- Maximum: 30.5" Minimum: 28.75"

Inside Clearance - Less Rails

Height
- 62"

Width
- 27.625" each compartment

Depth
- See racking specifications – Useable depth

Ratings

NEMA Class Types available
- Class 250 Type 4X

Paint Tested
- 1000 Hour salt spray (textured)
- 1000 Hour immersion

Door Opening Clearance

Height
- 58.25"

Width
- 23.625"

Exterior Cabinet Dimensions

Main Body
- Width: 88"
- Height: 62.48"
- Depth: 34.25"

Alumishield®
- Hang down height: 1.75"
- Width: 93.5"
- Depth: 36.5"

Handles
- Protrude 1.875"

Total Space Occupied
- Height: 63.105"
- Width: 88"
- Depth: 38"

	*Section Starting & Ending Points	Vertical Height Per section	Effective Depth For Each Section
Top	58.75" – 62.48"	3.25"	30.50"
	58.57" – 58.75"	.18"	29.50"
	37.00" – 58.57"	21.57	30.50"
Center	25.00" – 37.00"	12.00"	28.75"
	3.43" – 25.00"	21.57	30.50"
	3.25" – 3.43"	.18"	29.50"
Bottom	0.00" – 3.25"	3.25"	30.50"

WEB DRAWING (NOT FOR FABRICATION)

REVISIONS		
REV.	DESCRIPTION	DATE
A	Initial Release per DR-	5/28/2014
B	UPDATED FORMAT	12/8/2020

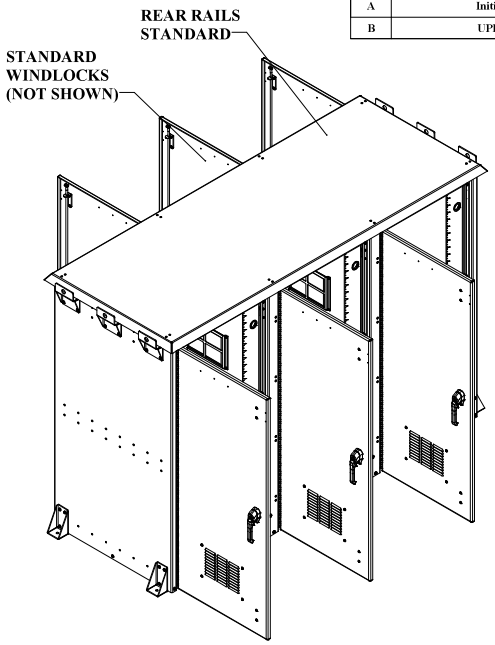

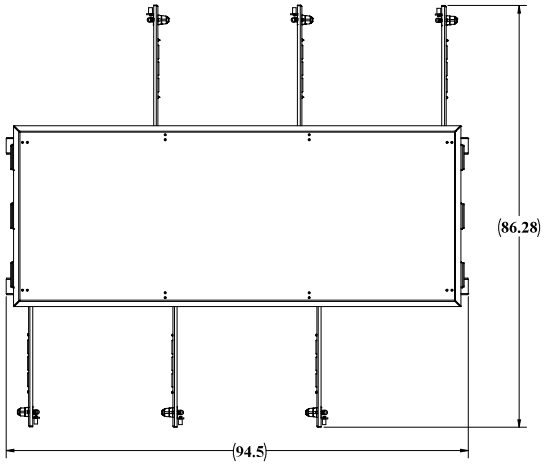

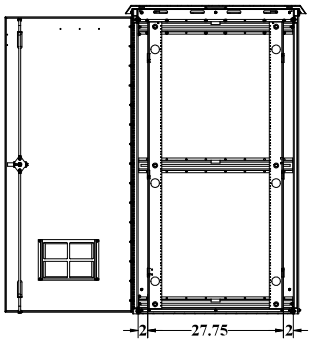

SECTION A-A
SCALE 1 : 12

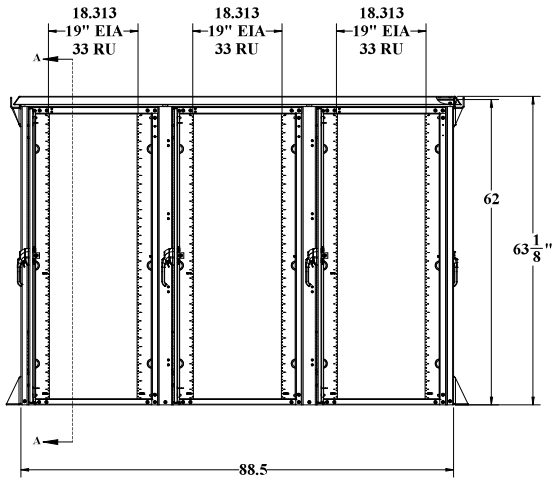

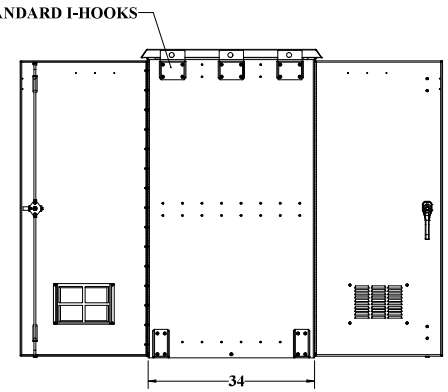

WEB DRAWING (NOT FOR FABRICATION)

UNLESS OTHERWISE SPECIFIED:		NAME	DATE	DDB Unlimited Inc.			
DIMENSIONS ARE IN INCHES	Modeled by:	DDB	6/4/2014	30D-XXXX			
ANGULAR: MACH ± BEND ± TWO PLACE DECIMAL ± THREE PLACE DECIMAL ±	Drawn by:	EdwardW	06/13/14	DWG, 30D, 62, DD			
ALL EDGES TO BE SHARP	Sales Rep.			SIZE	Cage Code:	DWG. NO.:	REV
MATERIAL THICKNESS ±	Q.A. Appr.	troy	12/08/20	D	3S5Y5	00983	B
MATERIAL: 5052-H32/H34 .125-.163TM B209-04	Prod.Mgr.:	ClarkK	12/09/20				
PAINT: Textured Sand Beige Glass Premium Flat/Fine	DO NOT SCALE DRAWING	Control Number:		SCALE: 1:8	WEIGHT: 552 lbs.	SHEET 1 OF 3	

DDB FORM 7.1-2 REV.F 05/02/19

UNCLASSIFIED PUBLIC

File Location: (DDB)\EPDM Vault\
C:\DDB\Drawing Requests\Customers\DDB WEB DWG\30D Family WEB\DR-00983 (30D-62D WEB DWG)\

WEB DRAWING (NOT FOR FABRICATION)

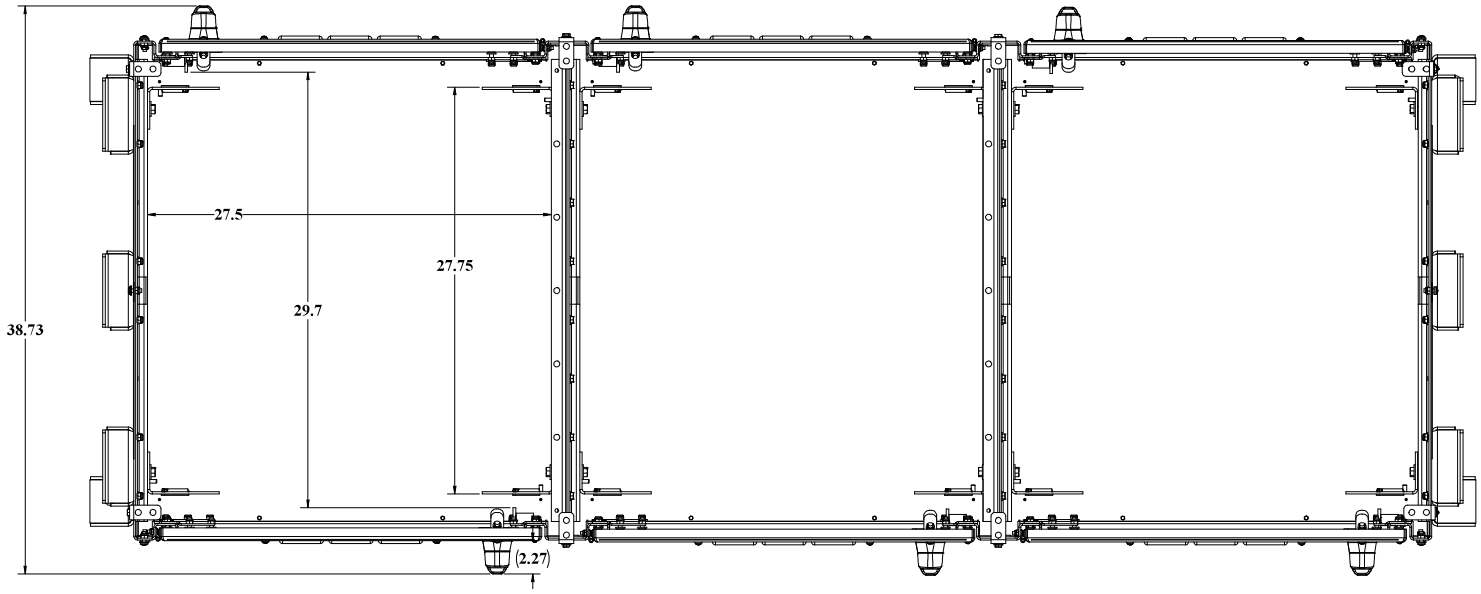

TOP VIEW SOLAR SHIELD AND CEILING NOT SHOWN

WEB DRAWING (NOT FOR FABRICATION)

UNLESS OTHERWISE SPECIFIED:	DDB Unlimited Inc.			
DIMENSIONS ARE IN INCHES ANGULAR: ±1° FRACTIONAL/NO DECIMAL: ±0.1250 TWO PLACE DECIMAL: ±0.0500 THREE PLACE DECIMAL: ±0.0100 ALL EDGES ##SHARP	DD Closed DWG, 3OD, DOORS CLOSED			
	SIZE	Cage Code:	DWG. NO.:	REV
	D	3S5Y5	00983	B
MATERIAL: 5052-H32/EN AW-5754 ASTM B209-94	SCALE: 1:8	WEIGHT: 624 lbs.		SHEET 2 OF 3
PAINT: Diamond Vogel Beige Gloss Textrex FT-6320				
DO NOT SCALE DRAWING				

DDB FORM 7.1-7 REV.K 08/02/17

UNCLASSIFIED PUBLIC
THE INFORMATION CONTAINED IN THIS DRAWING IS THE SOLE PROPERTY OF DDB Unlimited, INC. ANY
REPRODUCTION IN PART OR AS A WHOLE WITHOUT THE WRITTEN PERMISSION OF DDB Unlimited, INC. IS PROHIBITED.

File Location: (DDB)(EPDM Vault:)
C:\DDB\Drawing Requests\Customers\DDB WEB DWG\3OD Family WEB\DR-00983 (3OD-62DD

WEB DRAWING (NOT FOR FABRICATION)

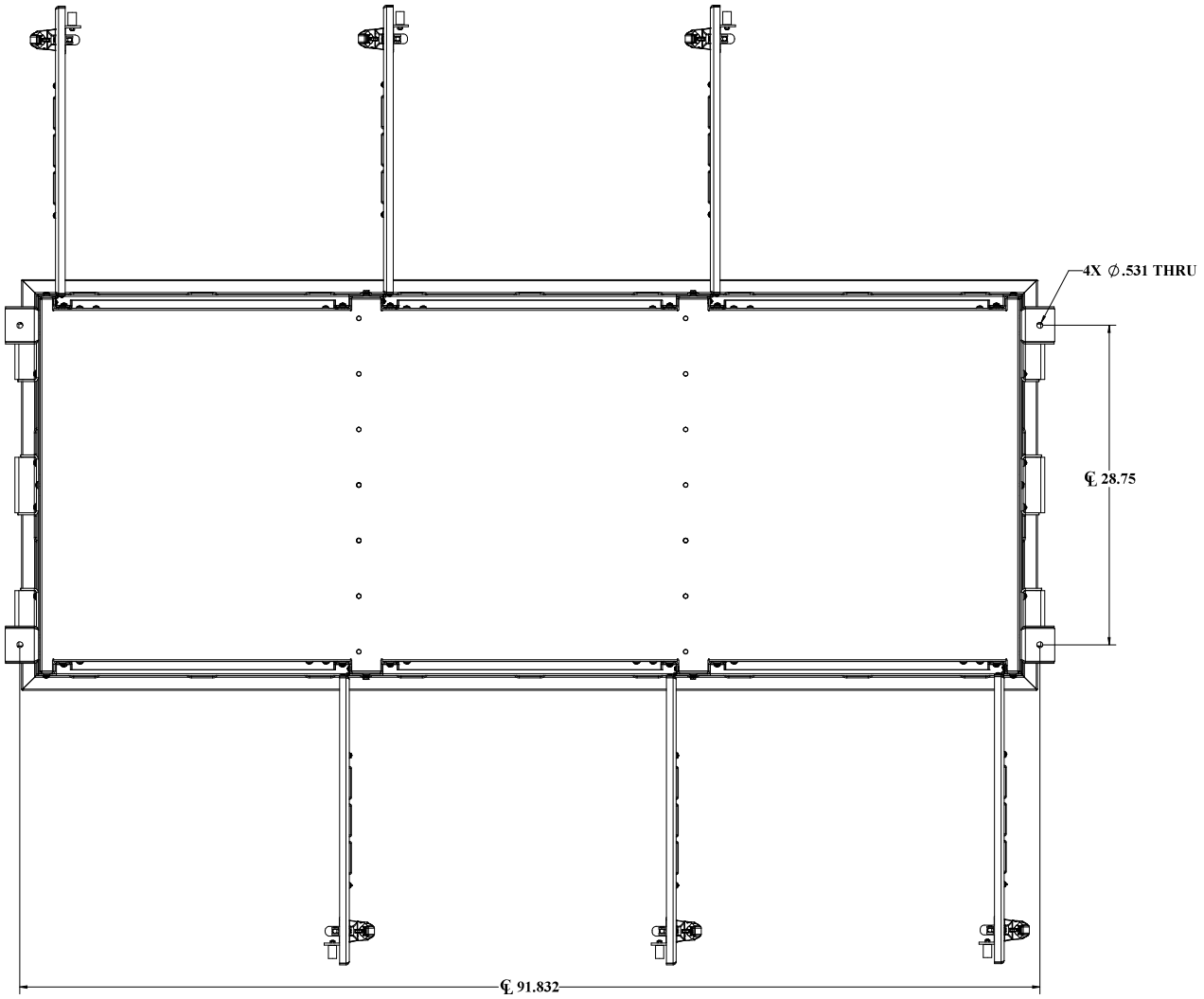

MOUNTING HOLES

WEB DRAWING (NOT FOR FABRICATION)

UNLESS OTHERWISE SPECIFIED:	*DDB Unlimited Inc.*			
DIMENSIONS ARE IN INCHES ANGULAR: ±1° FRACTIONAL/NO DECIMAL: ±0.1250 TWO PLACE DECIMAL: ±0.0500 THREE PLACE DECIMAL: ±0.0100 ALL HOLES ±0.0010	30D-62DD DWG, 30D, 62, DD			
	SIZE	Cage Code:	DWG. NO.:	REV
	D	3B5Y5	00983	B
MATERIAL: 5052-H32/6X 125-ASTM B209-94	SCALE: 1:8	WEIGHT: 552 lbs.		SHEET 3 OF 3
PAINT: Diamond Vogel Beige Gloss Texture ET-6320				
DO NOT SCALE DRAWING				

DDB FORM 7.1-REV.K 08/02/17

UNCLASSIFIED PUBLIC
THE INFORMATION CONTAINED IN THIS DRAWING IS THE SOLE PROPERTY OF DDB Unlimited, INC. ANY
REPRODUCTION IN PART OR AS A WHOLE WITHOUT THE WRITTEN PERMISSION OF DDB Unlimited, INC. IS PROHIBITED.

File Location: (DDB)(EPDM Vault:)
C:\DDB\Drawing Requests\Customers\DDB WEB DWG\30D Family WEB\DR-00983 (30D-62DD

3OD-78DXC

78" H x 88.5" W x 25" D (126 RU) Outdoor Enclosure

Click Here For More Information Online



General

Weight
- 478 Lbs. assembled
- 638 Lbs. shipping weight

Doors
- 6, secured by three point locking system
- Locks via customer supplied padlocks
- Sealed with .875" aluminum filled gaskets

Material
- .125" Alumiflex™
- Finish: Painted cream
- RF properties: Non-ferrous

Vents
- 30 bottom louvers per door
- 26 top louvers – In top cover, under Alumishield™
- One removable filter panel per door
- 26 fixed filter pads in top cover

Handles
- Stainless steel, padlocking

Lifting Hooks
- 4, standard

Racking Specifications

Rails
- Three sets standard (for additional rails see accessories)
- Alodine coated
- Holes tapped for 10-32 threads
- Each rail supported by two R-STRUTS™
- .160" Material (Alumiflex™)

Spacing
- 19" or 23" Racking available

Useable Height
- 73.5"

Useable Depth
- Maximum: 21.5" Minimum: 19.75"

Inside Clearance - Less Rails

Height
- 78"

Width
- 27.625" each compartment

Depth
- See racking specifications – Useable depth

Ratings

NEMA Class Types available
- Class 250 Type 4X

Paint Tested
- 1000 Hour salt spray (textured)
- 1000 Hour immersion

Door Opening Clearance

Height
- 74"

Width
- 23.625"

Exterior Cabinet Dimensions

Main Body
- Height: 78.25"
- Width: 88"
- Depth: 25.25"

Alumishield™
- Hang down height: 1.75"
- Width: 93.5"
- Depth: 29.5"

Handles
- Protrude 1.875"

Total Space Occupied
- Height: 78.5"
- Width: 88"
- Depth: 29"

	*Section Starting & Ending Points	Vertical Height Per section	Effective Depth For Each Section
Top	74.75" – 78.23"	3.25"	21.50"
	74.57" – 74.75"	.18"	20.50"
	45.00" – 74.57"	15.57	21.50"
Center	33.00"-45.00"	7.94"	19.75"
	3.43" – 33.00"	15.57	21.50"
	3.25" – 3.43"	.18"	20.50"
Bottom	0.00" – 3.25"	3.25"	21.50"

WEB DRAWING (NOT FOR FABRICATION)

REVISIONS		
REV.	DESCRIPTION	DATE
A	Initial Release per DR-	5/28/2014
B	UPDATED FORMAT	12/9/2020

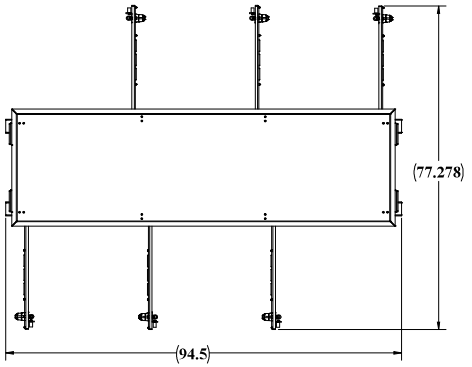

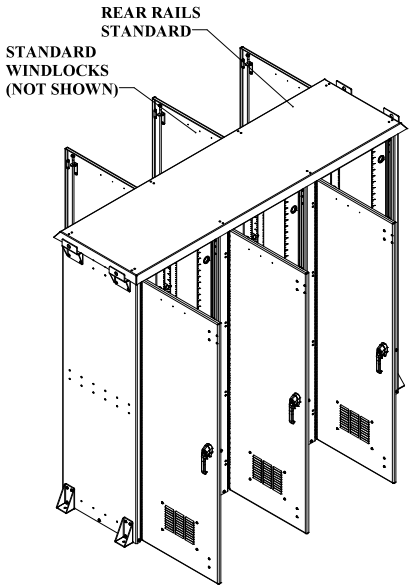

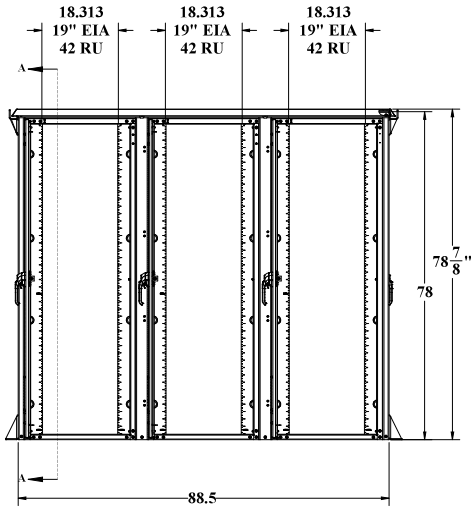

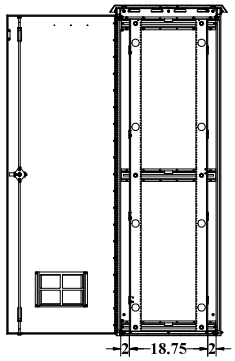

SECTION A-A
SCALE 1 : 14

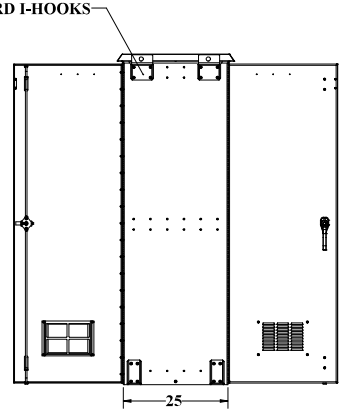

WEB DRAWING (NOT FOR FABRICATION)

UNLESS OTHERWISE SPECIFIED:		NAME	DATE	*DDB Unlimited Inc.*			
DIMENSIONS ARE IN INCHES	Model by:	DDB	6/4/2014	30D-XXXX			
ANGULAR: MACH ± BEND ± TWO PLACE DECIMAL ± THREE PLACE DECIMAL ±	Drawn by:	EdwardW	06/13/14	DWG. 30D, 78, DX			
ALL EDGES BREAK MATERIAL THICKNESS ±	Sales Rep.			SIZE	Cage Code:	DWG. NO.:	REV
MATERIAL: 5052-H32/0.125-ASTM B209-04	Q.A. Appr.	troy	12/11/20	D	3S5Y5	00985	B
PAINT: Textured Super Duty Gloss Premium Finish	Prod. Mgr.	ClarkK	12/11/20	SCALE: 1:8	WEIGHT: 380 lbs.		SHEET 1 OF 3
DO NOT SCALE DRAWING	Control Number:						

DDB FORM: 7.1-2 REV:F 05/02/19

UNCLASSIFIED PUBLIC

File Location: (DDB)\PDM Vault\
C:\DDB\Drawing Requests\Customers\DDB WEB DWG\30D Family WEB\DR-00985 (30D-78 WEB DWG)\

WEB DRAWING (NOT FOR FABRICATION)

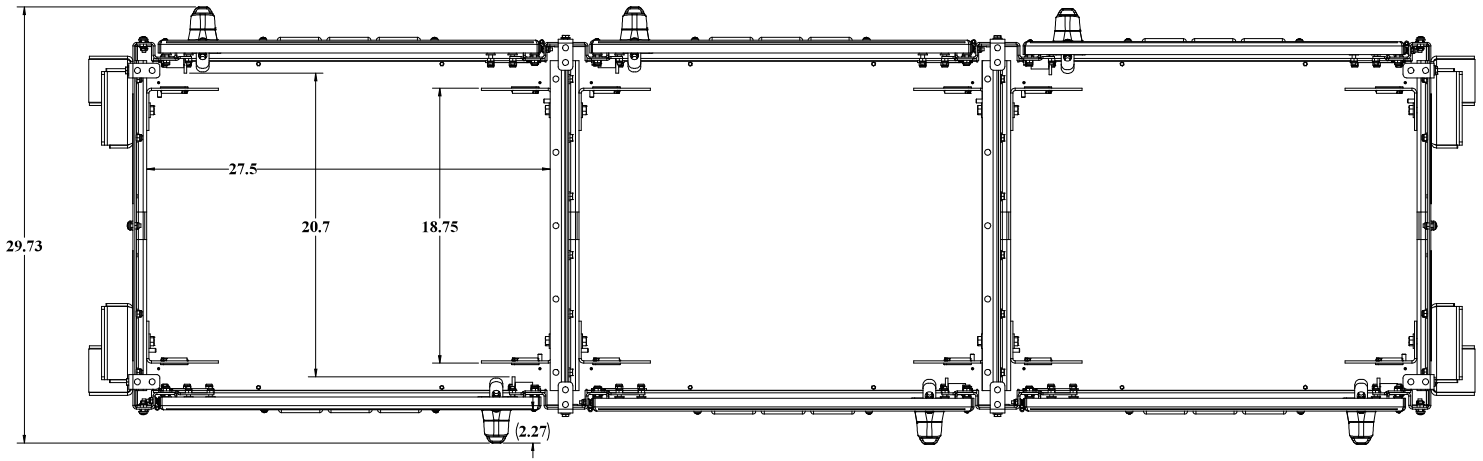

TOP VIEW SOLAR SHIELD AND CEILING NOT SHOWN

DDB FORM 7.1-7 REV.K 08/02/17

WEB DRAWING (NOT FOR FABRICATION)

UNLESS OTHERWISE SPECIFIED:	***DDB Unlimited Inc.***
DIMENSIONS ARE IN INCHES ANGULAR: ±1° FRACTIONAL/NO DECIMAL: ±0.1250 TWO PLACE DECIMAL: ±0.0500 THREE PLACE DECIMAL: ±0.0100 ALL HOLES ±0.0010	DX Closed DWG, 3OD, DOORS CLOSED
MATERIAL: 5052-H32/5XX.X/2%-ASTM B209-94	SIZE: D | Cage Code: 3B5Y5 | DWG. NO.: 00985 | REV: B
PAINT: Diamond Vogel Beige Gloss Texture ET-6320	SCALE: 1:8 | WEIGHT: 563 lbs. | SHEET 2 OF 3
DO NOT SCALE DRAWING	

UNCLASSIFIED PUBLIC
THE INFORMATION CONTAINED IN THIS DRAWING IS THE SOLE PROPERTY OF DDB Unlimited, INC. ANY
REPRODUCTION IN PART OR AS A WHOLE WITHOUT THE WRITTEN PERMISSION OF DDB Unlimited, INC. IS PROHIBITED.

File Location: (DDB)(EPDM Vault:)
C:\DDB\Drawing Requests\Customers\DDB WEB DWG\3OD Family WEB\DR-00985 (3OD-78DX

WEB DRAWING (NOT FOR FABRICATION)

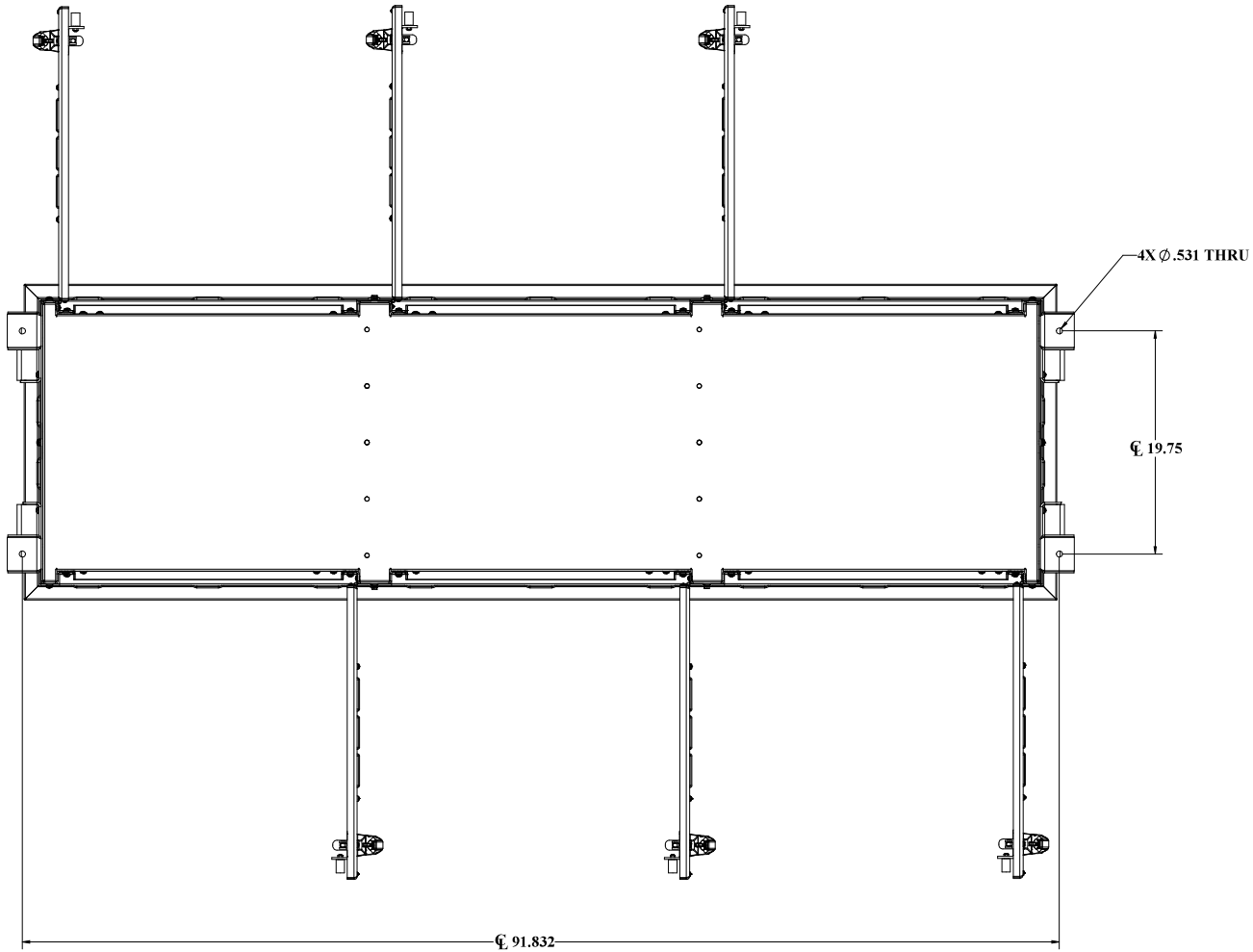

MOUNTING HOLES

WEB DRAWING (NOT FOR FABRICATION)

UNLESS OTHERWISE SPECIFIED:	DDB Unlimited Inc.			
DIMENSIONS ARE IN INCHES ANGULAR: ±1° FRACTIONAL/NO DECIMAL: ±0.1250 TWO PLACE DECIMAL: ±0.0500 THREE PLACE DECIMAL: ±0.0100 ALL HOLES ±0.0010	30D-78DX DWG, 30D, 78, DX			
	SIZE	Cage Code:	DWG. NO.:	REV
MATERIAL: 5052-H32XX 125-ASTM B209-94	D	3B5Y5	00985	B
PAINT: Diamond Vogel Beige Gloss Texture FT-0320	SCALE: 1:8	WEIGHT: 580 lbs.		SHEET 3 OF 3
DO NOT SCALE DRAWING				

DDB FORM 7.1-REV.K 08/02/17

UNCLASSIFIED PUBLIC
THE INFORMATION CONTAINED IN THIS DRAWING IS THE SOLE PROPERTY OF DDB Unlimited, INC. ANY
REPRODUCTION IN PART OR AS A WHOLE WITHOUT THE WRITTEN PERMISSION OF DDB Unlimited, INC. IS PROHIBITED.

File Location: (DDB)(EPDM Vault:)
C:\DDB\Drawing Requests\Customers\DDB WEB DWG\30D Family WEB\DR-00985 (30D-78DX

3OD-78DDC

78" H x 88.5" W x 34" D (126 RU) Outdoor Enclosure*

Click Here For More Information Online



* Front and Rear sets of rails allow some equipment to rack both directions providing up to 252 RU

General

Weight
- 450 Lbs. assembled
- 600 Lbs. shipping weight

Doors
- 6, secured by three point locking system
- Locks via customer supplied padlocks
- Sealed with .875" aluminum filled gaskets

Material
- .125" Alumiflex®
- Finish: Painted cream
- RF properties: Non-ferrous

Vents
- 30 bottom louvers per door
- 26 top louvers – In top cover-under Alumishield®
- One removable filter panel per door
- 26 fixed filter pads in top cover

Handles
- Stainless steel, padlocking

Lifting Hooks
- 6, standard

Racking Specifications

Rails
- Six sets standard (for additional rails see accessories)
- Alodine coated
- Holes tapped for 10-32 threads
- Each rail supported by two R-STRUTS™
- .160" Material (Alumiflex®)

Spacing
- 19" or 23" Racking available

Useable Height
- 73.5"

Useable Depth
- Maximum: 30.5" Minimum: 28.75"

Inside Clearance - Less Rails

Height
- 78"

Width
- 27.625" each compartment

Depth
- See racking specifications – Useable depth

Ratings

NEMA Class Types available
- Class 250 Type 4X

Paint Tested
- 1000 Hour salt spray (textured)
- 1000 Hour immersion

Door Opening Clearance

Height
- 74"

Width
- 23.625"

Exterior Cabinet Dimensions

Main Body
- Height: 78.25"
- Width: 88"
- Depth: 34.25"

Alumishield®
- Hang down height: 1.75"
- Width: 93.5"
- Depth: 38.5"

Handles
- Protrude 1.875"

Total Space Occupied
- Height: 78.5"
- Width: 88"
- Depth: 38"

	*Section Starting & Ending Points	Vertical Height Per section	Effective Depth For Each Section
Top	74.75" – 78.23"	3.25"	30.50"
	74.57" – 74.75"	.18"	29.50"
	45.00" – 74.57"	29.57"	30.50"
Center	33.00" – 45.00"	12.00"	28.75"
	3.43" – 33.00"	29.57"	30.50"
	3.25" – 3.43"	.18"	29.50"
Bottom	0.00" – 3.25"	3.25"	30.50"

WEB DRAWING (NOT FOR FABRICATION)

REVISIONS		
REV.	DESCRIPTION	DATE
A	Initial Release per DR- 00986	5/28/2014
B	UPDATED FORMAT	12/9/2020

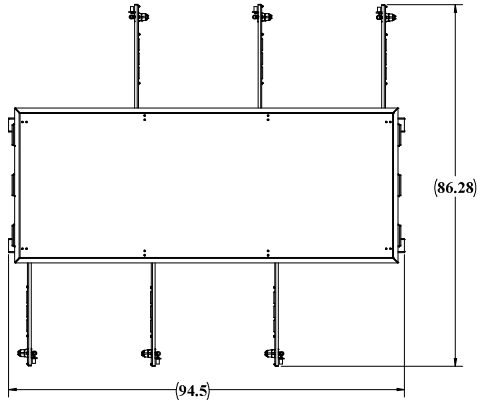

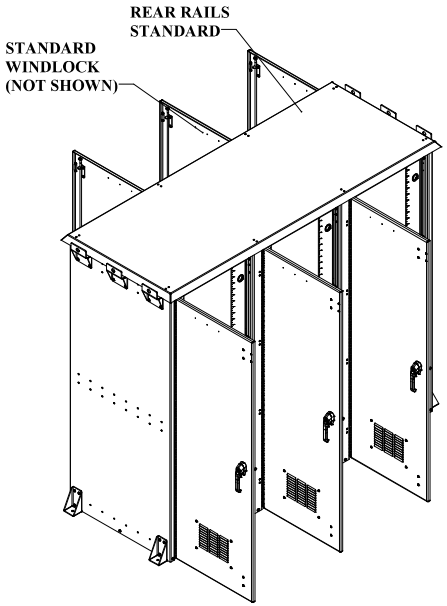

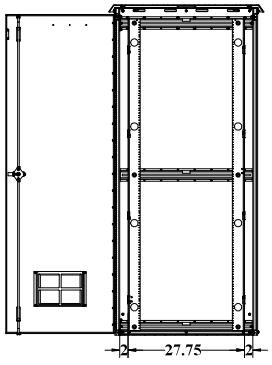

SECTION A-A
SCALE 1 : 14

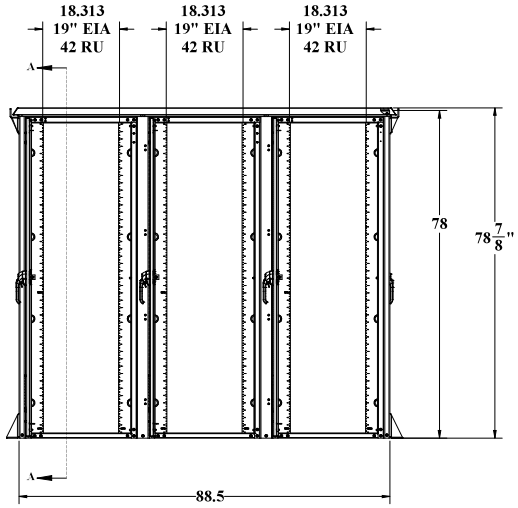

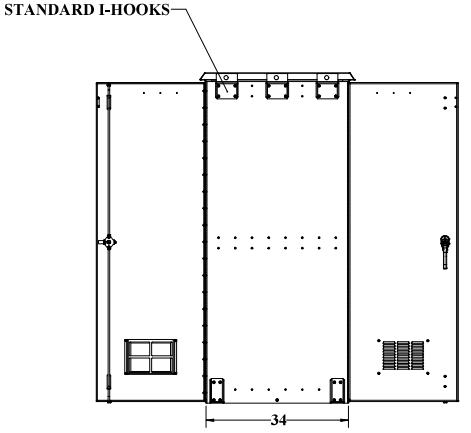

WEB DRAWING (NOT FOR FABRICATION)

UNLESS OTHERWISE SPECIFIED:		NAME	DATE	DDB Unlimited Inc.			
DIMENSIONS ARE IN INCHES	Model by:	DDB	6/4/2014	30D-XXXX			
ANGULAR: MACH ± BEND ± TWO PLACE DECIMAL ± THREE PLACE DECIMAL ±	Drawn by:	EdwardW	06/13/14	DWG, 30D, 78, DD			
ALL EDGES BREAK	Sales Rep.			SIZE	Cage Code:	DWG. NO.:	REV
MATERIAL THICKNESS ±	Q.A. Appr.	troy	12/11/20	D	3S5Y5	00986	B
MATERIAL: 5052-H32/H34 .125-.145TM B209-04	Prod.Mgr.:	ClarkK	12/11/20	SCALE: 1:8	WEIGHT: 640 lbs.		SHEET 1 OF 3
PAINT: Textured Super Duty Gloss Texture Clad Dr	Control Number:						
DO NOT SCALE DRAWING							

DDB FORM 7.1-2 REV.F 05/02/19

UNCLASSIFIED PUBLIC

File Location: (DDB)\EPDM Vault\
C:\DDB\Drawing Requests\Customers\DDB WEB DWG\30D Family WEB\DR-00986 (30D-78[
WEB DWG)\

WEB DRAWING (NOT FOR FABRICATION)

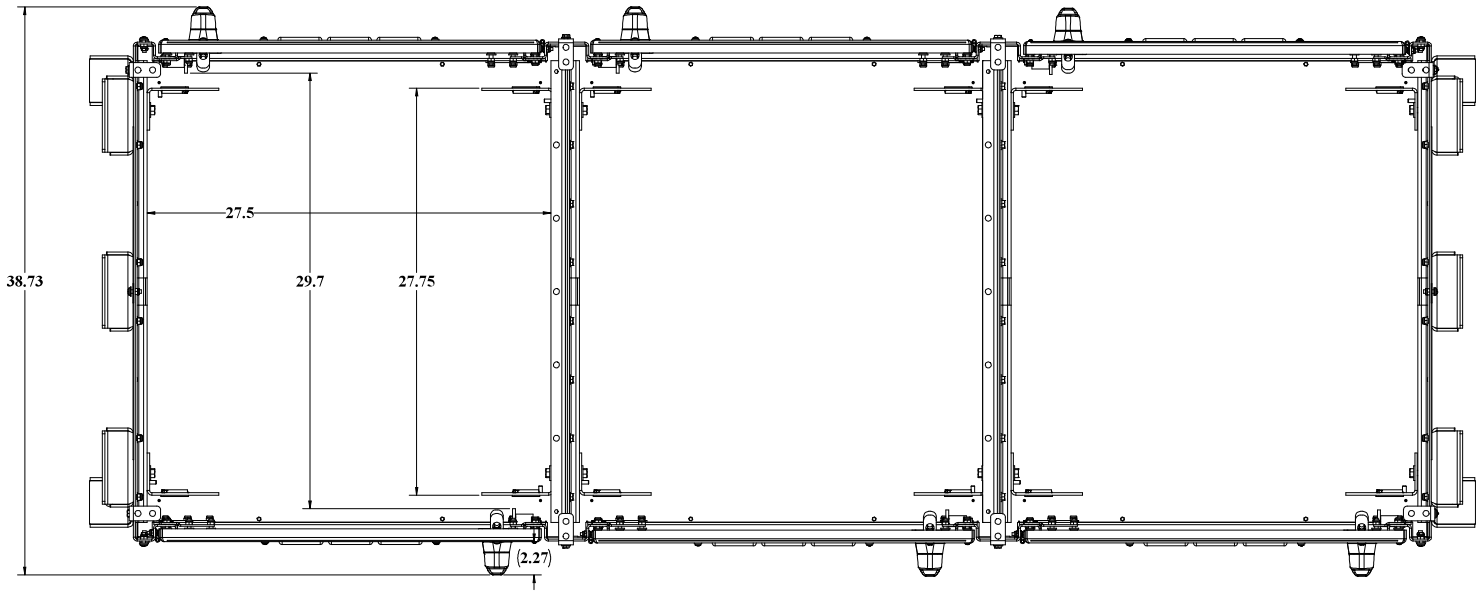

TOP VIEW SOLAR SHIELD AND CEILING NOT SHOWN

DDB FORM 7.1-7 REV.K 08/02/17

WEB DRAWING (NOT FOR FABRICATION)

UNLESS OTHERWISE SPECIFIED:	DDB Unlimited Inc.			
DIMENSIONS ARE IN INCHES ANGULAR: ±1° FRACTIONAL/NO DECIMAL: ±0.1250 TWO PLACE DECIMAL: ±0.0500 THREE PLACE DECIMAL: ±0.0250 ALL EDGES ##SHARP	DD Closed DWG, 3OD, DOORS CLOSED			
	SIZE: D	Cage Code: 385Y5	DWG. NO.: 00986	REV: B
MATERIAL: 5052-H32/X42/X25-ASTM B209-94	SCALE: 1:8	WEIGHT: 624 lbs.		SHEET 2 OF 3
PAINT: Diamond Vogel Beige Gloss Texture ET-6320				
DO NOT SCALE DRAWING				

UNCLASSIFIED PUBLIC
THE INFORMATION CONTAINED IN THIS DRAWING IS THE SOLE PROPERTY OF DDB Unlimited, INC. ANY
REPRODUCTION IN PART OR AS A WHOLE WITHOUT THE WRITTEN PERMISSION OF DDB Unlimited, INC. IS PROHIBITED.

File Location: (DDB)(EPDM Vault:)
C:\DDB\Drawing Requests\Customers\DDB WEB DWG\3OD Family WEB\DR-00986 (3OD-78DD

WEB DRAWING (NOT FOR FABRICATION)

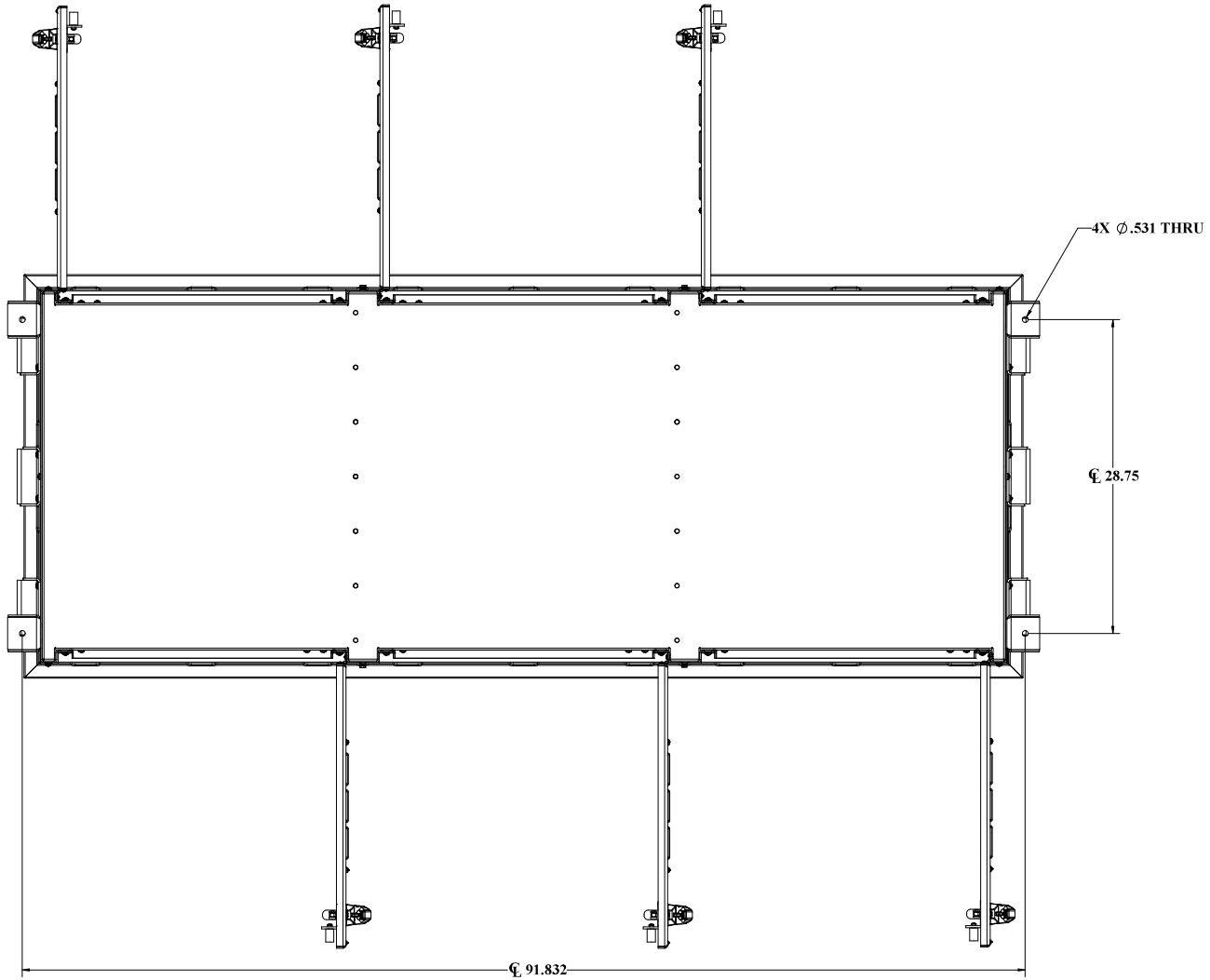

DDB FORM 7.1-REV.K 08/02/17

WEB DRAWING (NOT FOR FABRICATION)

UNLESS OTHERWISE SPECIFIED:	DDB Unlimited Inc.			
DIMENSIONS ARE IN INCHES ANGULAR: ±1° FRACTIONAL/NO DECIMAL: ±0.125 TWO PLACE DECIMAL: ± 0.010 THREE PLACE DECIMAL: ± 0.005 ALL HOLES ±0.005Ø	30D-78DD DWG, 30D, 78, DD			
	SIZE	Cage Code:	DWG. NO.:	REV
	D	3B5Y5	00986	B
MATERIAL: 5052-H32/0.125-ASTM B209-94	SCALE: 1:8	WEIGHT: 640 lbs.		SHEET 3 OF 3
PAINT: Diamond Vogel Beige Gloss Texture ET-6320				
DO NOT SCALE DRAWING				

UNCLASSIFIED PUBLIC
THE INFORMATION CONTAINED IN THIS DRAWING IS THE SOLE PROPERTY OF DDB Unlimited, INC. ANY
REPRODUCTION IN PART OR AS A WHOLE WITHOUT THE WRITTEN PERMISSION OF DDB Unlimited, INC. IS PROHIBITED.

File Location: (DDB)(EPDM Vault:)
C:\DDB\Drawing Requests\Customers\DDB WEB DWG\30D Family WEB\DR-00986 (30D-78DD

UL-50 OD SERIES

OD-16DXC-UL50

An ISO 9001 Certified company

Made in America

Believing in American Craftsmanship

15 YEAR WARRANTY

Why Choose the OD-UL Series?

The OD-16DXC-UL50 enclosures are the ultimate choice for your outdoor racking requirements. Being made of our own rugged Alumiflex®, you'll find it noticeably lighter than steel, yet strong enough to rack even the heaviest equipment. When choosing the OD-UL series, you have handpicked the highest value in American construction. The OD-UL series includes the standard features you have come to expect with DDB, incorporating the versatile R-strut system for adjustable racking, the security of a 3- point locking system, our patented Alumishield® solar cap to manage heat loads, door grounding strap, & UL listed gasketing. For those who need more than just our standard enclosure, DDB can also make a truly customized solution with our many available options including HVAC, providing a climate-controlled environment for any electronic equipment, electrical load panels and cable entry solutions to name a few. All of this comes together to create an enclosure able to meet all of the unique needs your customers have been seeking. DDB offers a state-of-the-art design, a competitive price, benchmark lead times and a guaranteed delivery, all backed up with an industry leading 15-year warranty on every enclosure. Put DDB's substantial stock to work for you today. Contact our professional staff to assist you with your made-to-order solution.



Features

15 Year Warranty

0.125" Aluminum Construction

Welded Construction

3-Point Locking System

Front and Rear Access

Stainless Steel External Hardware/Hinge

Custom Colors Available

Water/Rain/Sleet/Dust Tight

Flexible and Scalable

Quick Shipping

Application Types

Telecommunications
Wireless/Broadband
Fiber Optics
Back Haul
Base Station
Small Cell/ DAS
Utility
Public Safety
Military
Trailer-Based Communications
Wi-Fi
Flexible and Scalable
LTEE/4G/5G
Intelligent Traffic



Environmental & Safety Ratings:

- ✓ ETL environmentally listed to UL 50/50E, IP 66, Type 4
- ✓ ETL listed; Safety Requirements, UL 62368-1:2019 Ed.3, CSA C22.2

Weight and Dimensions

Approximate Exterior Enclosure Dimensions:

18”H x 29”W x 30”D

Shipping Dimensions:

42”D x 32”W x 26"H- Palletized

Approximate Shipping Weight:

107 lbs.

2301 S. HWY 77 Pauls Valley, OK 73075
T: (405)-665-2876
sales@ddbunlimited.com www.ddbunlimited.com

UL-50 OD SERIES

OD-16DXC-UL50

An ISO 9001 Certified company

Made in America

Believing in American Craftsmanship



Features

1. Alumishield Solar Cap
2. 19” Adjustable Racking Rails
3. Stainless Steel Door Hinge
4. Door Grounding Strap
5. 3-Point Locking System
6. 0.125" Aluminum Construction
7. Rear Door Access
8. Powder Coat Finish

2301 S. HWY 77 Pauls Valley, OK 73075
T: (405)-665-2876
sales@ddbunlimited.com www.ddbunlimited.com

Scan this code for Climate Control

Scan this code for Accessories

REVISIONS		
REV.	DESCRIPTION	DATE
A	OD-16DX--UL50	9/11/2018
B	UPDATED SHEET FORMAT	3/28/2022

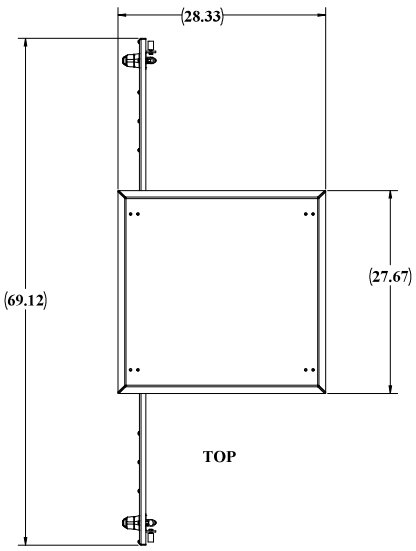

TOP

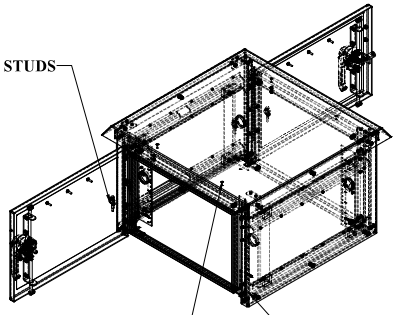

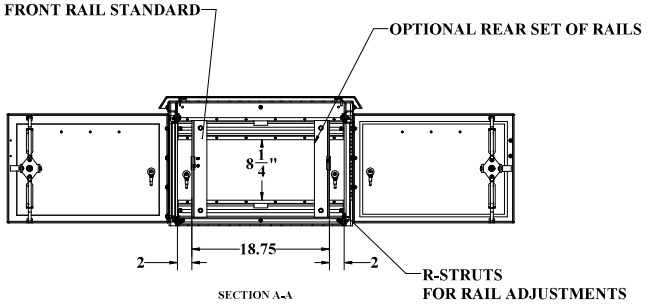

SECTION A-A

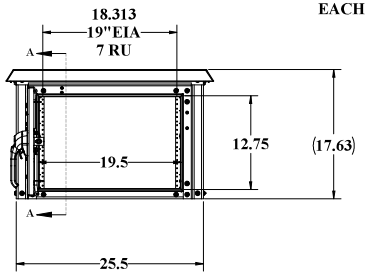

FRONT

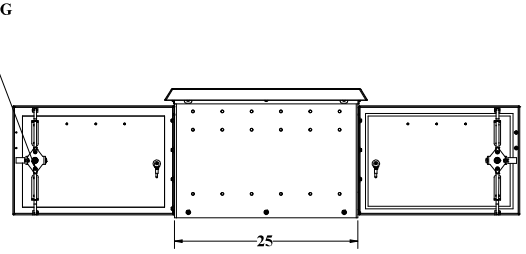

RIGHT SIDE

UNLESS OTHERWISE SPECIFIED:	DDB Unlimited Inc.			
DIMENSIONS ARE IN INCHES ANGULAR: MACH ± BEND ± FRACTIONAL ± NO DECIMAL ± TWO PLACE DECIMAL ± 0.010 THREE PLACE DECIMAL ± 0.005 ALL HOLES Ø .005 Ⓜ	OD-16DX-UL50			
	SIZE	Cage Code:	DWG. NO.:	REV
	D	3S5Y5	01842	B
MATERIAL: 5052-H32-0.125 ASTM B209-04	SCALE: 1:8	WEIGHT: 63 lbs.		SHEET 1 OF 3
PAINT: DIAMOND WOOD, 30GU GLOSS TEXTURE 07-6329				
DO NOT SCALE DRAWING				

09/19/24

UNCLASSIFIED PUBLIC

File Location: (DDB) EPDM Vault:)
C:\DDB\DR Requests\Customers\DDB WEB DWG\OD Family-UL50 WEB\OD-16DX-UL50 WEB\

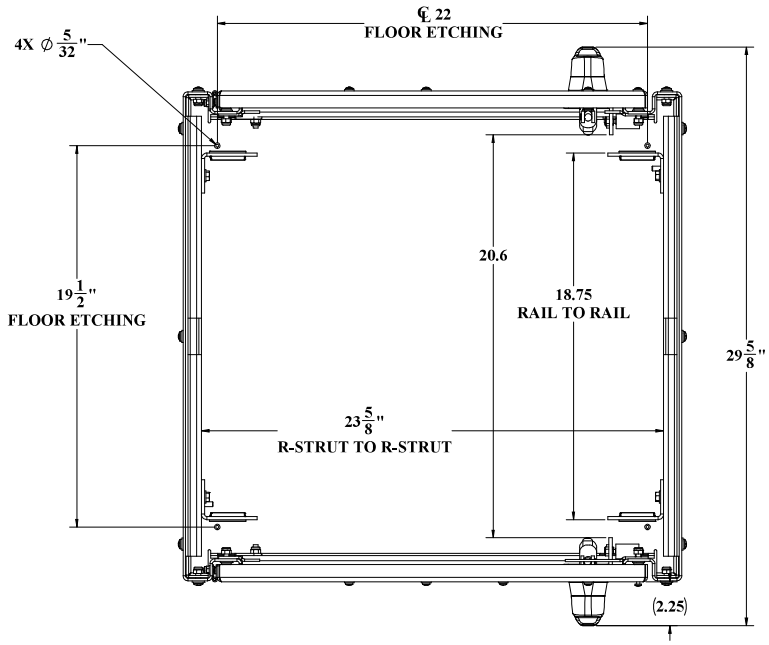

TOP VIEW CEILING AND ALUMASHIELD NOT SHOWN

UNLESS OTHERWISE SPECIFIED:	DDB Unlimited Inc.			
DIMENSIONS ARE IN INCHES ANGULAR: ±1° FRACTIONAL/NO DECIMAL: ±0.1250 ONE PLACE DECIMAL: ±0.0500 TWO PLACE DECIMAL: ±0.0100 THREE PLACE DECIMAL: ±0.0100 ALL HOLES Ø.0005Ⓜ	OD-DX-Closed			
	SIZE	Cage Code:	DWG. NO.:	REV
	D	3S5Y5	01842	B
MATERIAL: 5052-H32-0.125 ASTM B209-04	SCALE: 1:8	WEIGHT: 87 lbs.	SHEET 2 OF 3	
FINISH: DIAMOND WOOD, RIDGE GLOSS TEXTURE #14329				
DO NOT SCALE DRAWING				

09/19/24

UNCLASSIFIED PUBLIC

File Location: (DDB) EPDM Vault:\
C:\DDB\DR Requests\Customers\DDB WEB DWG\OD Family-UL50 WEB\OD-160X-UL50 WEB\

DOOR GASKET HIDDEN

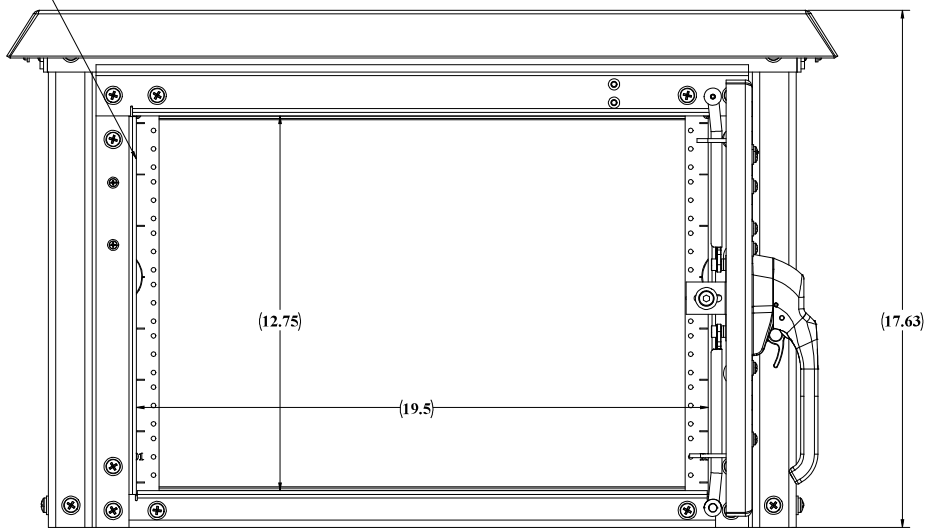

BACK VIEW

UNLESS OTHERWISE SPECIFIED:	DDB Unlimited Inc.			
DIMENSIONS ARE IN INCHES ANGULAR: ±1° FRACTIONAL/NO DECIMAL: ±0.1250 TWO PLACE DECIMAL: ±0.0500 THREE PLACE DECIMAL: ±0.0100 ALL HOLES Ø.0938 ⊕	OD-16DX-UL50			
	SIZE	Cage Code:	DWG. NO.:	REV
	D	3S5Y5	01842	B
MATERIAL: 5052-H32-0.125 ASTM B209-04	SCALE: 1:8	WEIGHT: 63 lbs.		SHEET 3 OF 3
PAINT: DIAMOND VOGEL BEIGE GLOSS TEXTURE P5420				
DO NOT SCALE DRAWING				

09/19/24

UNCLASSIFIED PUBLIC

File Location: (DDB) EPDM Vault:\
C:\DDB\DR Requests\Customers\DDB WEB DWG\OD Family-UL50 WEB\OD-16DX-UL50 WEB\

UL-50 OD SERIES

OD-16DDC-UL50

An ISO 9001 Certified company

Made in America

Believing in American Craftsmanship

15 YEAR WARRANTY

Why Choose the OD-UL Series?

The OD-16DDC-UL50 enclosures are the ultimate choice for your outdoor racking requirements. Being made of our own rugged Alumiflex®, you'll find it noticeably lighter than steel, yet strong enough to rack even the heaviest equipment. When choosing the OD-UL series, you have handpicked the highest value in American construction. The OD-UL series includes the standard features you have come to expect with DDB, incorporating the versatile R-strut system for adjustable racking, the security of a 3- point locking system, our patented Alumishield® solar cap to manage heat loads, door grounding strap, & UL listed gasketing. For those who need more than just our standard enclosure, DDB can also make a truly customized solution with our many available options including HVAC, providing a climate-controlled environment for any electronic equipment, electrical load panels and cable entry solutions to name a few. All of this comes together to create an enclosure able to meet all of the unique needs your customers have been seeking. DDB offers a state-of-the-art design, a competitive price, benchmark lead times and a guaranteed delivery, all backed up with an industry leading 15-year warranty on every enclosure. Put DDB's substantial stock to work for you today. Contact our professional staff to assist you with your made-to-order solution.



Features

15 Year Warranty

0.125" Aluminum Construction

Welded Construction

3-Point Locking System

Front and Rear Access

Stainless Steel External Hardware/Hinge

Custom Colors Available

Water/Rain/Sleet/Dust Tight

Flexible and Scalable

Quick Shipping

Application Types

Telecommunications
Wireless/Broadband
Fiber Optics
Back Haul
Base Station
Small Cell/ DAS
Utility
Public Safety
Military
Trailer-Based Communications
Wi-Fi
Flexible and Scalable
LTEE/4G/5G
Intelligent Traffic



Environmental & Safety Ratings:

- ✓ ETL environmentally listed to UL 50/50E, IP 66, Type 4
- ✓ ETL listed; Safety Requirements, UL 62368-1:2019 Ed.3, CSA C22.2

Weight and Dimensions

Approximate Exterior Enclosure Dimensions:

18”H x 29”W x 39”D

Shipping Dimensions:

42”D x 32”W x 26"H- Palletized

Approximate Shipping Weight:

124 lbs.

2301 S. HWY 77 Pauls Valley, OK 73075
T: (405)-665-2876
sales@ddbunlimited.com www.ddbunlimited.com

UL-50 OD SERIES

OD-16DDC-UL50

An ISO 9001 Certified company

Made in America

Believing in American Craftsmanship



Features

1. Alumishield Solar Cap
2. 19” Adjustable Racking Rails
3. Stainless Steel Door Hinge
4. Door Grounding Strap
5. 3-Point Locking System
6. 0.125" Aluminum Construction
7. Rear Door Access
8. Powder Coat Finish

Scan this code for Climate Control

Scan this code for Accessories

2301 S. HWY 77 Pauls Valley, OK 73075
T: (405)-665-2876
sales@ddbunlimited.com www.ddbunlimited.com

REVISIONS		
REV.	DESCRIPTION	DATE
A	CREATED WEBSITE DRAWING FOR OD-16DD-UL50	9/12/2018
B	UPDATED SHEET FORMAT.	3/28/2022

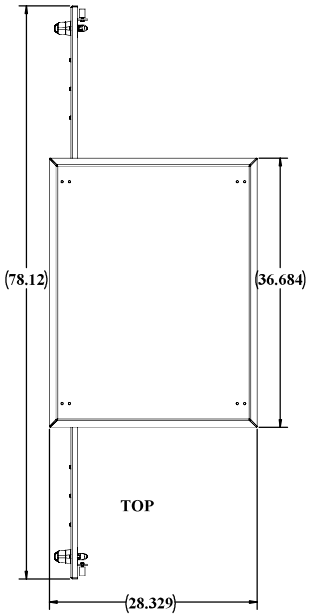

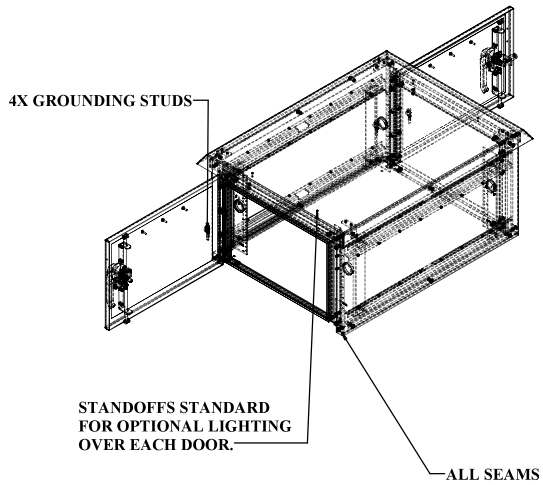

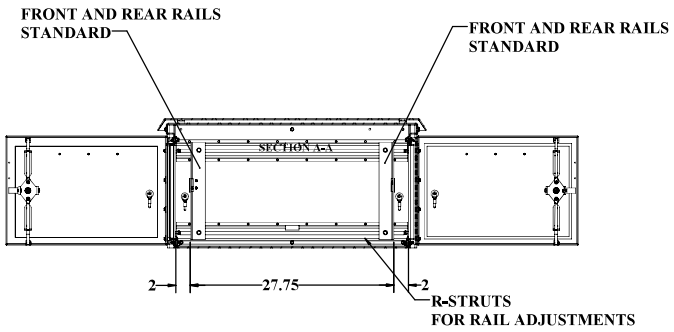

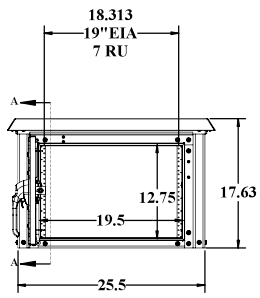

FRONT

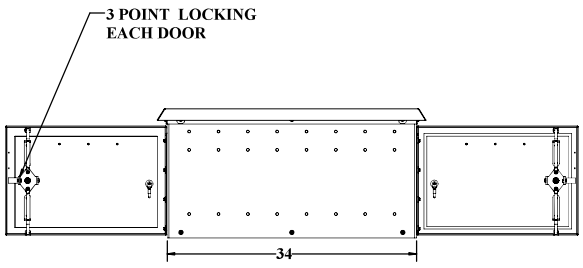

RIGHT SIDE

UNLESS OTHERWISE SPECIFIED:	DDB Unlimited Inc.			
DIMENSIONS ARE IN INCHES ANGULAR: ±1° FRACTIONAL: ±1/32 DECIMAL: ±.010 TWO PLACE DECIMAL: ±.010 THREE PLACE DECIMAL: ±.005 ALL HOLES ⌀	OD-16DD-UL50 Enclosure, OD, 16, DD, UL50OD-16DD-UL50			
	SIZE	Cage Code:	DWG. NO.:	REV
	D	3S5Y5	01833	B
MATERIAL: 5052-H32-0.125 ASTM B209-04	SCALE: 1:8	WEIGHT: 78 lbs.	SHEET 1 OF 3	
PAINT: DIAMOND VOGEL, BEIGE GLOSS TEXTURE E14920				
DO NOT SCALE DRAWING				

DDB FORM 7.1-REV. K 08/02/17

UNCLASSIFIED PUBLIC

File Location: (DDB)(EPDM Vault)
C:\DDB\DR Requests\Customers\DDB WEB DWG\OD Fam\UL50 WEB\OD-16DD-UL50 WEB\

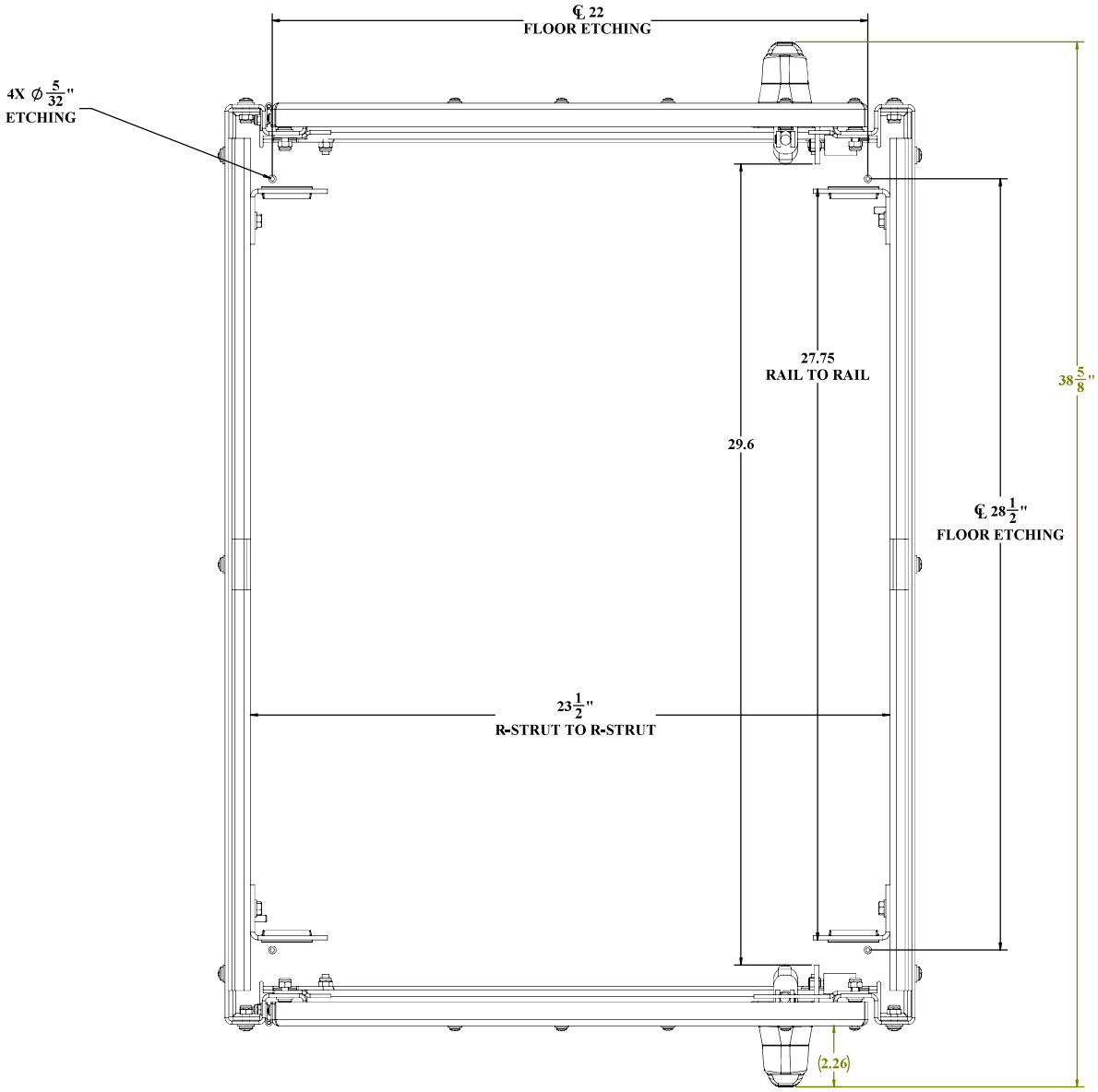

TOP VIEW CEILING AND ALUMASHIELD NOT SHOWN

UNLESS OTHERWISE SPECIFIED:	DDB Unlimited Inc.
DIMENSIONS ARE IN INCHES	OD-DD-Closed
ANGULAR: ±1°	Enclosure, OD, DD, UL50 ClosedOD-DD-Closed
FRACTIONAL ±1/64 DECIMAL: ±.005	
TWO PLACE DECIMAL: ±.010	
THREE PLACE DECIMAL: ±.005	
SIZE: D	Cage Code: 385Y5
DWG. NO.: 01833	REV: B
MATERIAL: 5052-H32XX.125 B209-04	SCALE: 1:8
WEIGHT: 104 lbs.	SHEET 2 OF 3
PAINT: DIAMOND VOGEL BEIGE GLOSS TEXTURE	
DO NOT SCALE DRAWING	

DDB FORM 7.1-REV.K 08/03/17

UNCLASSIFIED PUBLIC

File Location: (DDB)(EPDM Vault)
C:\DDB\DR Requests\Customers\DDB WEB DWG\OD Family\UL50 WEB\OD-16DD-UL50 WEB\

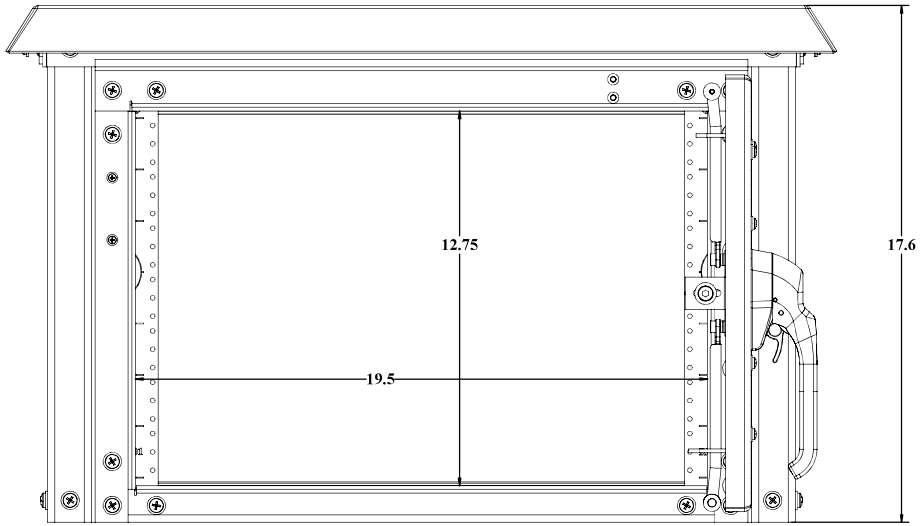

BACK VIEW

UNLESS OTHERWISE SPECIFIED:	DDB Unlimited Inc.			
DIMENSIONS ARE IN INCHES ANGULAR: FRACTIONAL ±1/64 DECIMAL: ±1/128 TWO PLACE DECIMAL: ±.010 THREE PLACE DECIMAL: ±.005 ALL HOLES ±.003Ø	OD-16DD-UL50 Enclosure, OD, 16, DD, UL50OD-16DD-UL50			
	SIZE	Cage Code:	DWG. NO.:	REV
	D	3S5Y5	01833	B
MATERIAL: 5052-H32XX.125 B209-04	SCALE: 1:8	WEIGHT: 78 lbs.		SHEET 3 OF 3
PAINT: DIAMOND VOGEL BEIGE GLOSS TEXTURE POWDER				
DO NOT SCALE DRAWING				

DDB FORM 7.1-REV.K 08/02/17

UNCLASSIFIED PUBLIC

File Location: (DDB) (EPDM Vault)
C:\DDB\DR Requests\Customers\DDB WEB DWG\OD Family\UL50 WEB\OD-16DD-UL50 WEB\

DDB UNLIMITED®

An ISO 9001 Certified company

UL-50 OD SERIES

OD-30DXC-UL50

Made in America

Believing in American Craftsmanship

15 YEAR WARRANTY

Why Choose the OD-UL Series?



The OD-30DXC-UL50 enclosures are the ultimate choice for your outdoor racking requirements. Being made of our own rugged Alumiflex®, you'll find it noticeably lighter than steel, yet strong enough to rack even the heaviest equipment. When choosing the OD-UL series, you have handpicked the highest value in American construction. The OD-UL series includes the standard features you have come to expect with DDB, incorporating the versatile R-strut system for adjustable racking, the security of a 3- point locking system, our patented Alumishield® solar cap to manage heat loads, door grounding strap, & UL listed gasketing. For those who need more than just our standard enclosure, DDB can also make a truly customized solution with our many available options including HVAC, providing a climate-controlled environment for any electronic equipment, electrical load panels and cable entry solutions to name a few. All of this comes together to create an enclosure able to meet all of the unique needs your customers have been seeking. DDB offers a state-of-the-art design, a competitive price, benchmark lead times and a guaranteed delivery, all backed up with an industry leading 15-year warranty on every enclosure. Put DDB's substantial stock to work for you today. Contact our professional staff to assist you with your made-to-order solution.

Application Types

Telecommunications
Wireless/Broadband
Fiber Optics
Back Haul
Base Station
Small Cell/ DAS
Utility
Public Safety
Military
Trailer-Based Communications
Wi-Fi
Flexible and Scalable
LTEE/4G/5G
Intelligent Traffic

2301 S. HWY 77 Pauls Valley, OK 73075
T: (405)-665-2876
sales@ddbunlimited.com www.ddbunlimited.com



Environmental & Safety Ratings:

- ✓ ETL environmentally listed to UL 50/50E, IP 66, Type 4
- ✓ ETL listed; Safety Requirements, UL 62368-1:2019 Ed.3, CSA C22.2

Features

15 Year Warranty
0.125" Aluminum Construction
Welded Construction
3-Point Locking System
Front and Rear Access
Stainless Steel External Hardware/Hinge
Custom Colors Available
Water/Rain/Sleet/Dust Tight
Flexible and Scalable
Quick Shipping

Weight and Dimensions

Approximate Exterior Enclosure Dimensions:
32”H x 29”W x 30”D
Shipping Dimensions:
42”D x 32”W x 40"H- Palletized
Approximate Shipping Weight:
126 lbs.

UL-50 OD SERIES

OD-30DXC-UL50

An ISO 9001 Certified company

Made in America

Believing in American Craftsmanship

15 YEAR WARRANTY

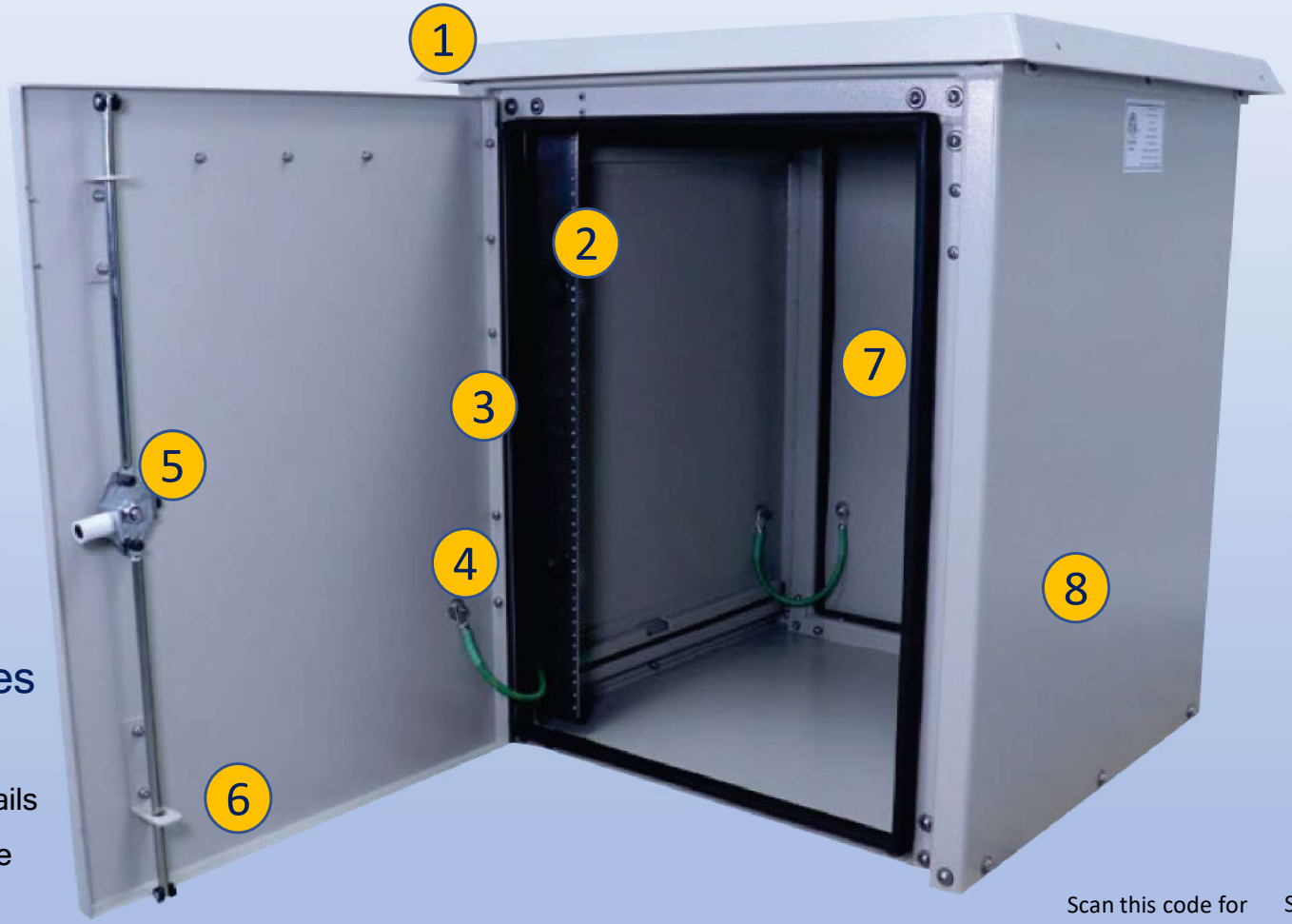

Features

1. Alumishield Solar Cap
2. 19” Adjustable Racking Rails
3. Stainless Steel Door Hinge
4. Door Grounding Strap
5. 3-Point Locking System
6. 0.125" Aluminum Construction
7. Rear Door Access
8. Powder Coat Finish

Scan this code for Climate Control

Scan this code for Accessories

2301 S. HWY 77 Pauls Valley, OK 73075
T: (405)-665-2876
sales@ddbunlimited.com www.ddbunlimited.com

REVISIONS		
REV.	DESCRIPTION	DATE
A	CREATED WEBSITE DRAWING OD-30DX-UL50	9/12/2018
B	UPDATED SHEET FORMAT	3/28/2022

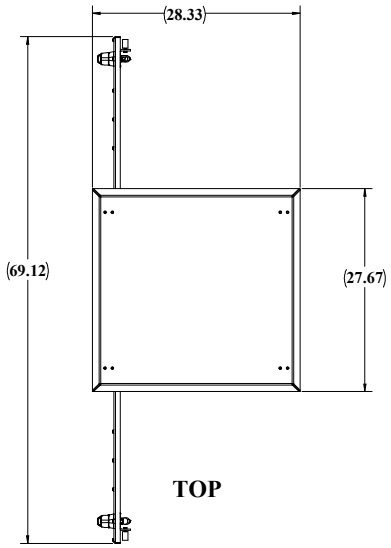

TOP

STANDOFFS STANDARD FOR OPTIONAL LIGHTING OVER EACH DOOR.

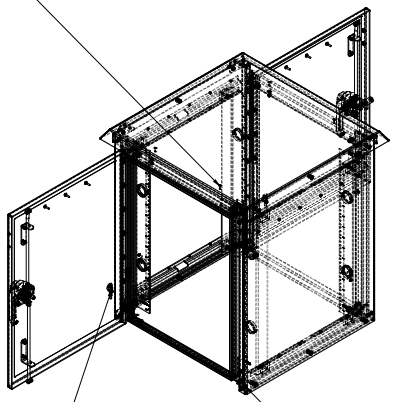

4X GROUNDING STUDS

ALL SEAMS WELDED

FRONT RAIL STANDARD.

REAR RAIL OPTIONAL

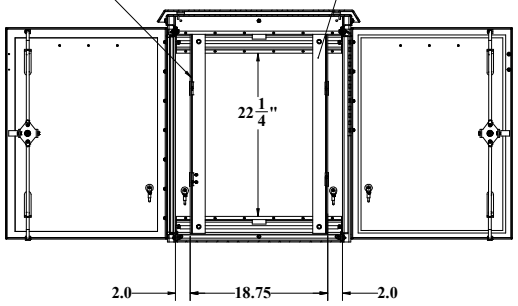

SECTION A-A

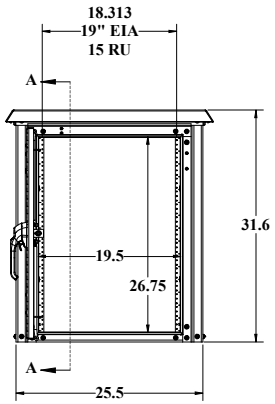

FRONT

3 POINT LOCKING EACH DOOR

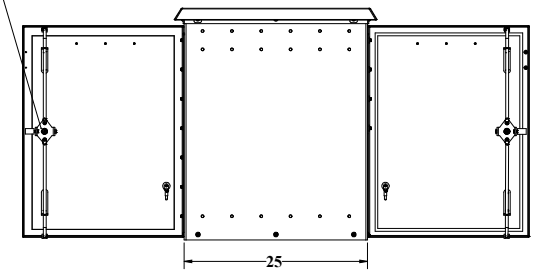

RIGHT SIDE

09/19/24

UNLESS OTHERWISE SPECIFIED:	DDB Unlimited Inc.			
DIMENSIONS ARE IN INCHES ANGULAR: ±1° FRACTIONAL/NO DECIMAL: ±1/64 TWO PLACE DECIMAL: ±0.030 THREE PLACE DECIMAL: ±0.010 ALL HOLES ±0.005Ⓜ	OD-30DX-UL50			
	SIZE	Cage Code:	DWG. NO.:	REV
	D	3B5Y5	01843	B
MATERIAL: 5052-H32-0.125 ASTM B209-04	SCALE: 1:8	WEIGHT: 87 lbs.	SHEET 1 OF 3	
PAINT: DIAMOND VOGEL, BRIDE GLOSS 70/30/90 ST-8320				
DO NOT SCALE DRAWING				

UNCLASSIFIED PUBLIC

File Location: (DDB)(EPDM Vault:)
C:\DDB\DR Requests\Customers\DDB WEB DWG\OD Family-UL50 WEB\OD-30DX-UL50 WEB\

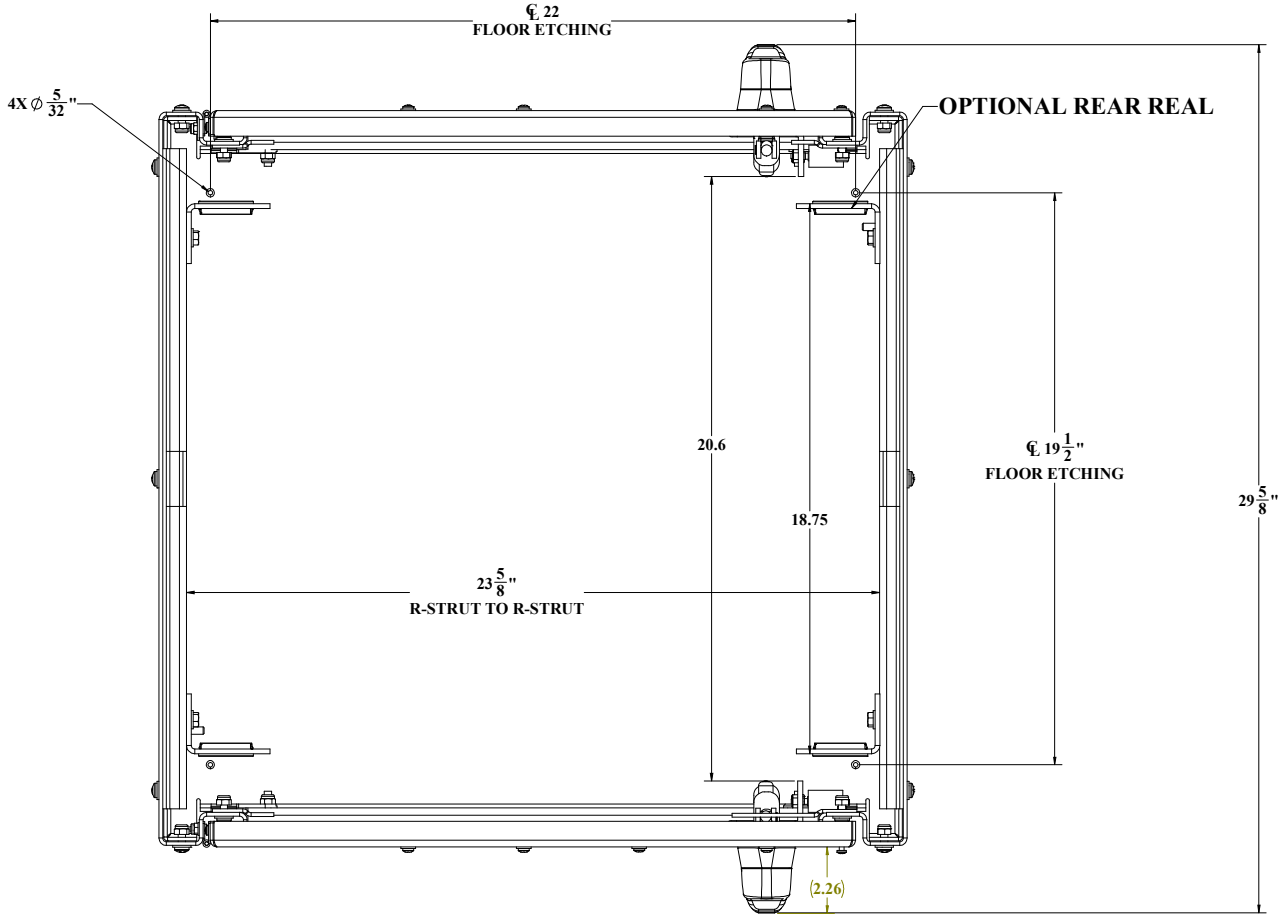

TOP VIEW CEILING AND ALUMASHIELD NOT SHOWN

UNLESS OTHERWISE SPECIFIED:	DDB Unlimited Inc.
DIMENSIONS ARE IN INCHES	OD-DX-Closed
ANGULAR: ±1°	
FRACTIONAL/NO DECIMAL: ± 1/32	
TWO PLACE DECIMAL: ± 0.010	
THREE PLACE DECIMAL: ± 0.005	
ALL HOLES ±0.003Ⓜ	
MATERIAL: 5052-H32-0.125 ASTM B209-04	SIZE: D | Cage Code: 385Y5 | DWG. NO.: 01843 | REV: B
PAINT: DIAMOND VOGEL BRIDE GLOSS 50/60/80 BT-8320	SCALE: 1:8 | WEIGHT: 87 lbs. | SHEET 2 OF 3
DO NOT SCALE DRAWING	

09/19/24

UNCLASSIFIED PUBLIC

File Location: (DDB)(EPDM Vault:)
C:\DDB\DR Requests\Customers\DDB WEB DWG\OD Family-UL50 WEB\OD-30DX-UL50 WEB\

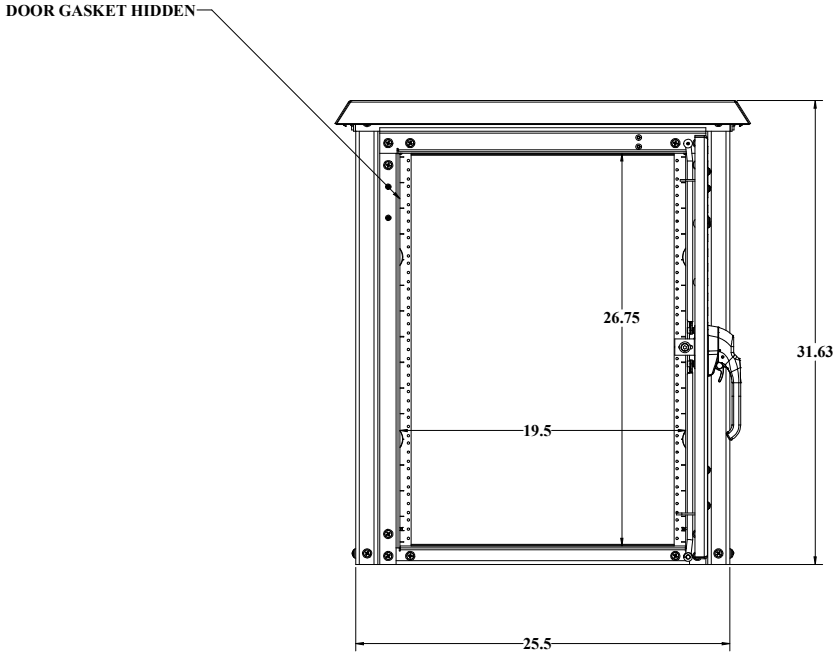

UNLESS OTHERWISE SPECIFIED:	DDB Unlimited Inc.			
DIMENSIONS ARE IN INCHES ANGULAR: ±1° FRACTIONAL/NO DECIMAL: ± 1/32 TWO PLACE DECIMAL: ± 0.020 THREE PLACE DECIMAL: ± 0.005 ALL HOLES ±0.005Ⓜ	OD-30DX-UL50			
	SIZE	Cage Code:	DWG. NO.:	REV
	D	385Y5	01843	B
MATERIAL: 5052-H32-0.125 ASTM B209-04	SCALE: 1:8	WEIGHT: 87 lbs.		SHEET 3 OF 3
PAINT: DIAMOND VOGEL, BRIDE GLOSS 909W99 BT-8320				
DO NOT SCALE DRAWING				

09/19/24

UNCLASSIFIED PUBLIC

File Location: (DDB)(EPDM Vault:)
C:\DDB\DR Requests\Customers\DDB WEB DWG\OD Family-UL50 WEB\OD-30DX-UL50 WEB\

DDB UNLIMITED®

An ISO 9001 Certified company

UL-50 OD SERIES

OD-30DDC-UL50

Made in America

Believing in American Craftsmanship

15 YEAR WARRANTY

Why Choose the OD-UL Series?



The OD-30DDC-UL50 enclosures are the ultimate choice for your outdoor racking requirements. Being made of our own rugged Alumiflex®, you'll find it noticeably lighter than steel, yet strong enough to rack even the heaviest equipment. When choosing the OD-UL series, you have handpicked the highest value in American construction. The OD-UL series includes the standard features you have come to expect with DDB, incorporating the versatile R-strut system for adjustable racking, the security of a 3- point locking system, our patented Alumishield® solar cap to manage heat loads, door grounding strap, & UL listed gasketing. For those who need more than just our standard enclosure, DDB can also make a truly customized solution with our many available options including HVAC, providing a climate-controlled environment for any electronic equipment, electrical load panels and cable entry solutions to name a few. All of this comes together to create an enclosure able to meet all of the unique needs your customers have been seeking. DDB offers a state-of-the-art design, a competitive price, benchmark lead times and a guaranteed delivery, all backed up with an industry leading 15-year warranty on every enclosure. Put DDB's substantial stock to work for you today. Contact our professional staff to assist you with your made-to-order solution.

Application Types

Telecommunications
Wireless/Broadband
Fiber Optics
Back Haul
Base Station
Small Cell/ DAS
Utility
Public Safety
Military
Trailer-Based Communications
Wi-Fi
Flexible and Scalable
LTEE/4G/5G
Intelligent Traffic

2301 S. HWY 77 Pauls Valley, OK 73075
T: (405)-665-2876
sales@ddbunlimited.com www.ddbunlimited.com



Environmental & Safety Ratings:

- ✓ ETL environmentally listed to UL 50/50E, IP 66, Type 4
- ✓ ETL listed; Safety Requirements, UL 62368-1:2019 Ed.3, CSA C22.2

Features

15 Year Warranty
0.125" Aluminum Construction
Welded Construction
3-Point Locking System
Front and Rear Access
Stainless Steel External Hardware/Hinge
Custom Colors Available
Water/Rain/Sleet/Dust Tight
Flexible and Scalable
Quick Shipping

Weight and Dimensions

Approximate Exterior Enclosure Dimensions:
32”H x 29”W x 39”D
Shipping Dimensions:
42”D x 32”W x 40"H- Palletized
Approximate Shipping Weight:
150 lbs.

DDB UNLIMITED®

An ISO 9001 Certified company

UL-50 OD SERIES

OD-30DDC-UL50

Made in America

Believing in American Craftsmanship

15 YEAR WARRANTY

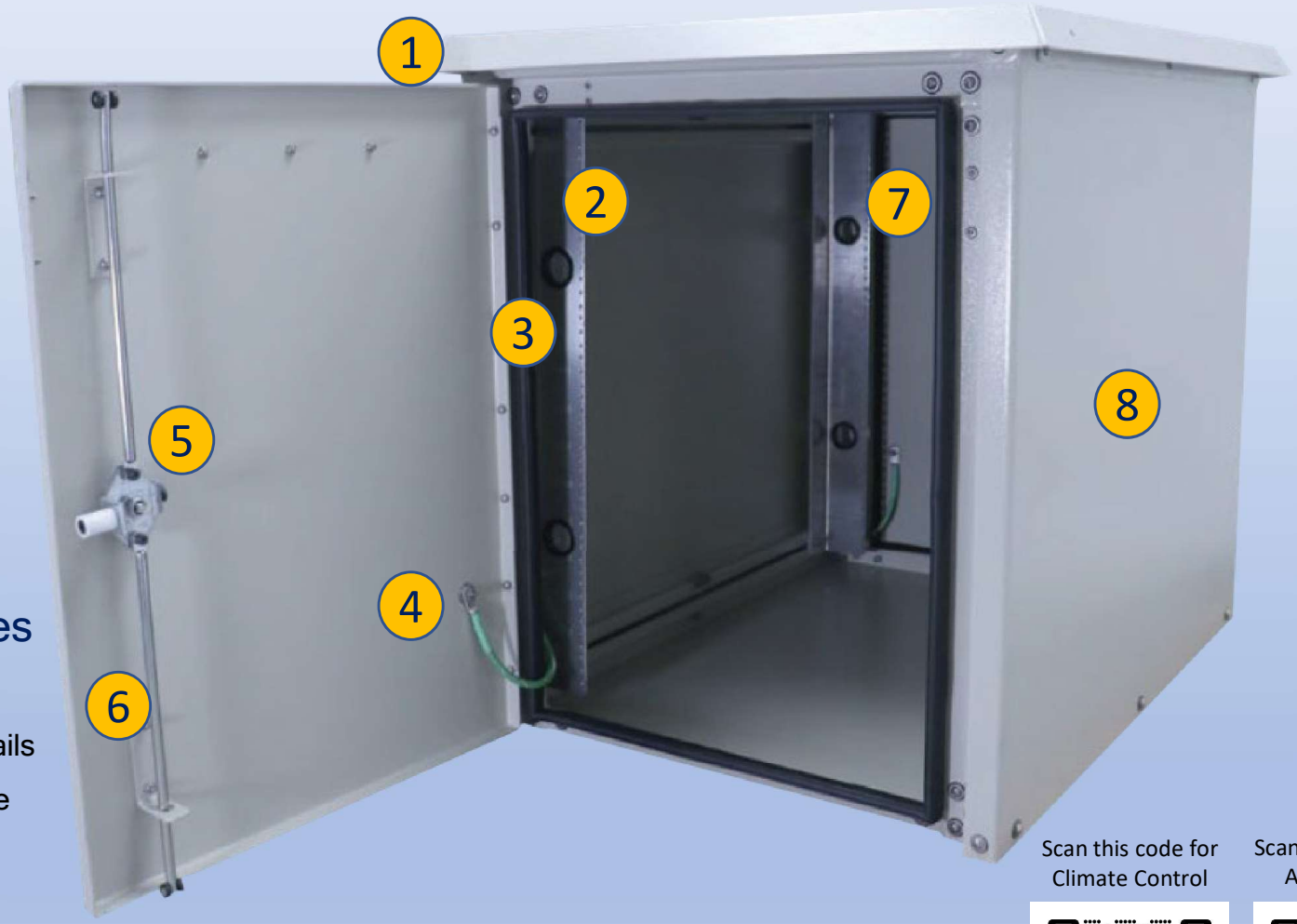

Features

1. Alumishield Solar Cap
2. 19” Adjustable Racking Rails
3. Stainless Steel Door Hinge
4. Door Grounding Strap
5. 3-Point Locking System
6. 0.125" Aluminum Construction
7. Rear Door Access
8. Powder Coat Finish

Scan this code for Climate Control

Scan this code for Accessories

2301 S. HWY 77 Pauls Valley, OK 73075
T: (405)-665-2876
sales@ddbunlimited.com www.ddbunlimited.com

REVISIONS		
REV.	DESCRIPTION	DATE
A	CREATED WEBSITE DRAWING FOR OD-30DD-UL50 PER DR-01844	9/17/2018
B	UPDATED SHEET FORMAT	3/28/2022

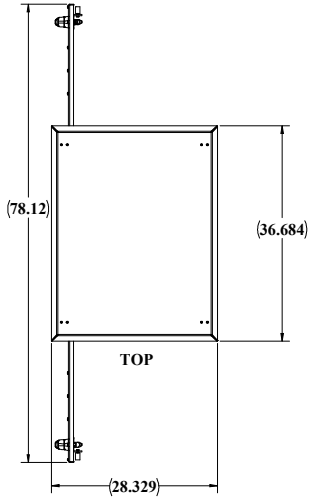

STANDOFFS STANDARD
FOR OPTIONAL LIGHTING
OVER EACH DOOR.

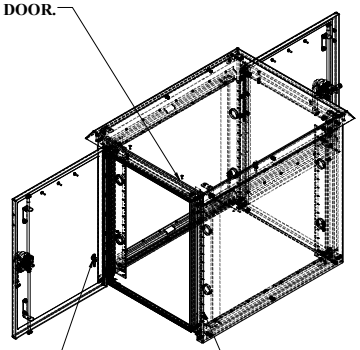

4X GROUNDING STUDS

ALL SEAMS WELDED

FRONT AND REAR RAILS
STANDARD

FRONT AND REAR RAILS
STANDARD

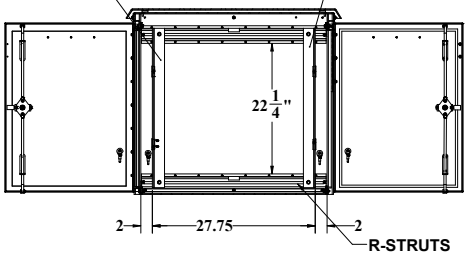

R-STRUTS
FOR RAIL ADJUSTMENTS

SECTION A-A
SCALE 1 : 10

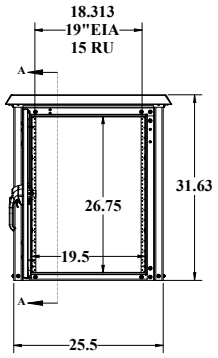

FRONT

3 POINT LOCKING
EACH DOOR

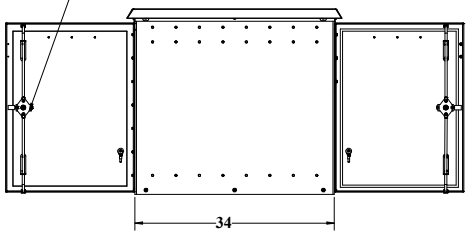

RIGHT

09/19/24

UNLESS OTHERWISE SPECIFIED:	DDB Unlimited Inc.			
DIMENSIONS ARE IN INCHES ANGULAR: ±1° FRACTIONAL/NO DECIMAL: ±1/64 TWO PLACE DECIMAL: ±0.030 THREE PLACE DECIMAL: ±0.0050 ALL HOLES ±0.005Ⓜ	OD-30DD-UL50			
	SIZE	Cage Code:	DWG. NO.:	REV
	D	385Y5	01844	B
MATERIAL: 5052-H32-0.125 ASTM B209-04	SCALE: 1:12	WEIGHT: 104 lbs.		SHEET 1 OF 3
PAINT: DIAMOND VOGEL BRIDE GLOSS 909WB BT-8320				
DO NOT SCALE DRAWING				

UNCLASSIFIED PUBLIC

File Location: (DDB)(EPDM Vault:)
C:\DDB\DR Requests\Customers\DDB WEB DWG\OD Family-UL50 WEB\OD-30DD-UL50 WEB\

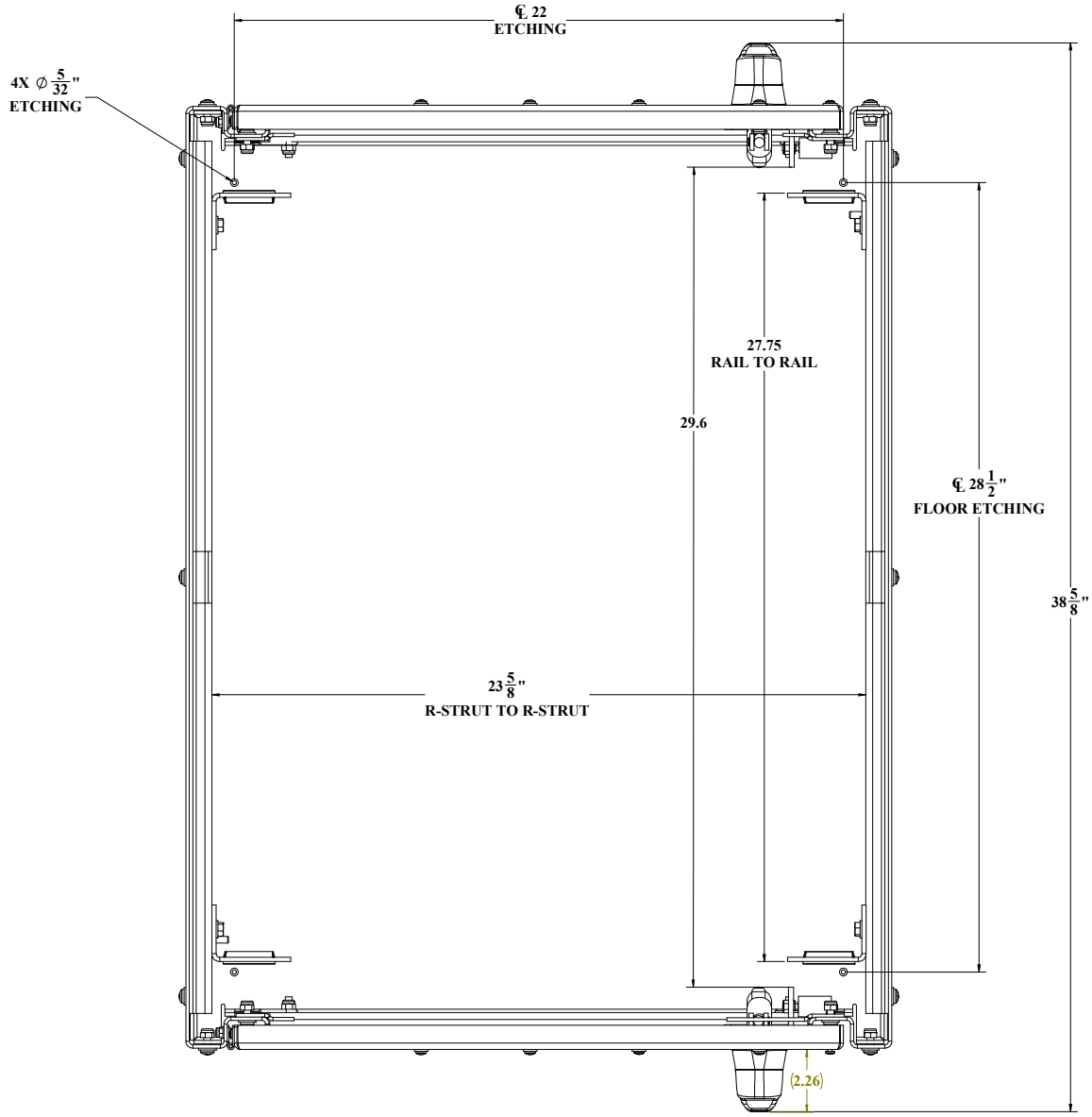

TOP VIEW CEILING AND ALUMASHIELD NOT SHOWN

UNLESS OTHERWISE SPECIFIED:	DDB Unlimited Inc.			
DIMENSIONS ARE IN INCHES ANGULAR: MACH ± 1° FRACTIONAL ± NO DECIMAL: ± 1/16 TWO PLACE DECIMAL: ± 0.010 THREE PLACE DECIMAL: ± 0.005 ALL HOLES ø±0.003 Ⓜ	OD-DD-Closed Enclosure, OD, DD, UL50 ClosedOD-DD-Closed			
	SIZE	Cage Code:	DWG. NO.:	REV
	D	385Y5	01844	B
MATERIAL: 5052-H32-0125 ASTM-B209-04	SCALE: 1:12	WEIGHT: 104 lbs.		SHEET 2 OF 3
PAINT: DIAMOND VOGEL, BERGE GLOSS ET-8328				
DO NOT SCALE DRAWING				

DDB FORM 7.1-REV.K 08/02/17

UNCLASSIFIED PUBLIC

File Location: (DDB)(EPDM Vault:)
C:\DDB\DR Requests\Customers\DDB WEB DWG\OD Family-UL50 WEB\OD-30DD-UL50 WEB\

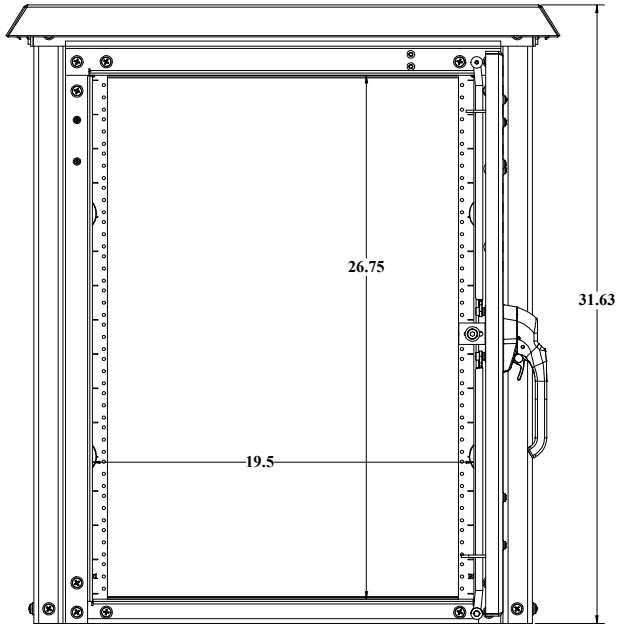

BACK VIEW

UNLESS OTHERWISE SPECIFIED:	***DDB Unlimited Inc.***		
DIMENSIONS ARE IN INCHES ANGULAR: FRACTIONAL NO DECIMAL: ±1/16 ONE PLACE DECIMAL: ± 0.100 TWO PLACE DECIMAL: ± 0.030 THREE PLACE DECIMAL: ± 0.010 ALL HOLES ø±0.010 Ⓜ	OD-30DD-UL50 Enclosure, OD, 30, DD, UL50OD-30DD-UL50		
	SIZE	Cage Code:	DWG. NO.:	REV
	D	385Y5	01844	B
MATERIAL - 5052-H32-0125 ASTM-B209-04	SCALE: 1:12	WEIGHT: 104 lbs.		SHEET 3 OF 3
PAINT: DIAMOND VOGEL, BERGE GLOSS ET-8328				
DO NOT SCALE DRAWING				

DDB FORM 7.1-7 REV.K 08/02/17

UNCLASSIFIED PUBLIC

File Location: (DDB)(EPDM Vault:)
C:\DDB\DR Requests\Customers\DDB WEB DWG\OD Family-UL50 WEB\OD-30DD-UL50 WEB\

An ISO 9001 Certified company

UL-50 OD SERIES

OD-30DDXC-UL50

Made in America

Believing in American Craftsmanship

15 YEAR WARRANTY

Why Choose the OD-UL Series?

The OD-30DDXC-UL50 enclosures are the ultimate choice for your outdoor racking requirements. Being made of our own rugged Alumiflex®, you'll find it noticeably lighter than steel, yet strong enough to rack even the heaviest equipment. When choosing the OD-UL series, you have handpicked the highest value in American construction. The OD-UL series includes the standard features you have come to expect with DDB, incorporating the versatile R-strut system for adjustable racking, the security of a 3- point locking system, our patented Alumishield® solar cap to manage heat loads, door grounding strap, & UL listed gasketing. For those who need more than just our standard enclosure, DDB can also make a truly customized solution with our many available options including HVAC, providing a climate-controlled environment for any electronic equipment, electrical load panels and cable entry solutions to name a few. All of this comes together to create an enclosure able to meet all of the unique needs your customers have been seeking. DDB offers a state-of-the-art design, a competitive price, benchmark lead times and a guaranteed delivery, all backed up with an industry leading 15-year warranty on every enclosure. Put DDB's substantial stock to work for you today. Contact our professional staff to assist you with your made-to-order solution.



Features

15 Year Warranty

0.125" Aluminum Construction

Welded Construction

3-Point Locking System

Front and Rear Access

Stainless Steel External Hardware/Hinge

Custom Colors Available

Water/Rain/Sleet/Dust Tight

Flexible and Scalable

Quick Shipping

Application Types

Telecommunications
Wireless/Broadband
Fiber Optics
Back Haul
Base Station
Small Cell/ DAS
Utility
Public Safety
Military
Trailer-Based Communications
Wi-Fi
Flexible and Scalable
LTEE/4G/5G
Intelligent Traffic



Environmental & Safety Ratings:

- ✓ ETL environmentally listed to UL 50/50E, IP 66, Type 4
- ✓ ETL listed; Safety Requirements, UL 62368-1:2019 Ed.3, CSA C22.2

Weight and Dimensions

Approximate Exterior Enclosure Dimensions:

32”H x 29”W x 47”D

Shipping Dimensions:

52”D x 32”W x 40"H- Palletized

Approximate Shipping Weight:

187 lbs.

2301 S. HWY 77 Pauls Valley, OK 73075
T: (405)-665-2876
sales@ddbunlimited.com www.ddbunlimited.com

An ISO 9001 Certified company

UL-50 OD SERIES

OD-30DDXC-UL50

Made in America

Believing in American Craftsmanship

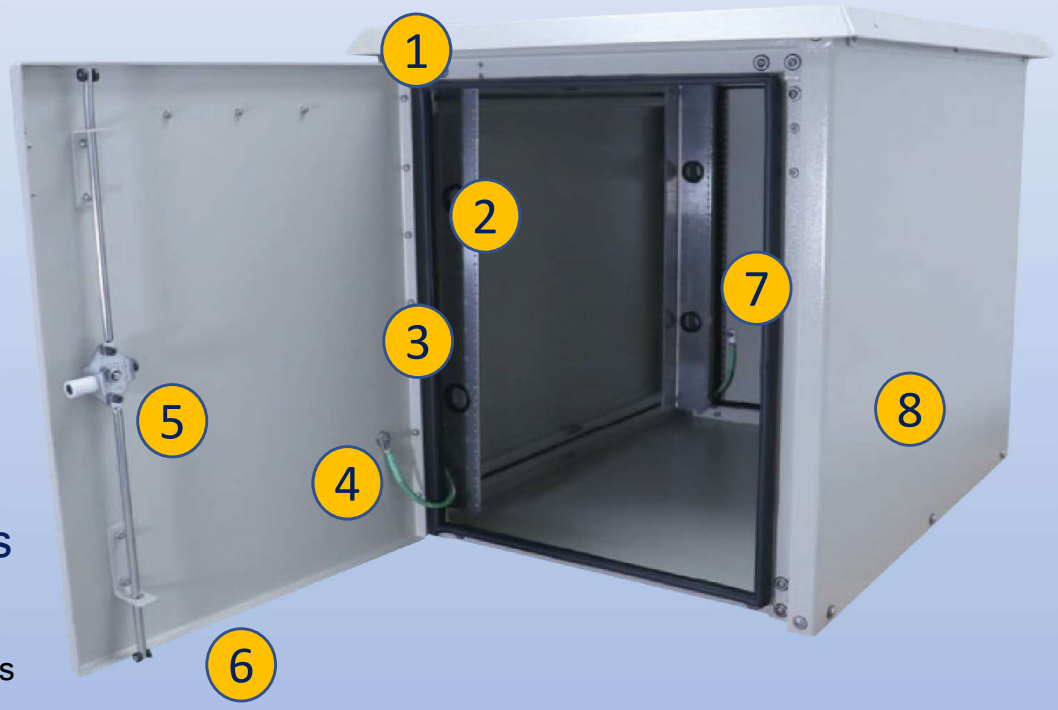

Features

1. Alumishield Solar Cap
2. 19” Adjustable Racking Rails
3. Stainless Steel Door Hinge
4. Door Grounding Strap
5. 3-Point Locking System
6. 0.125" Aluminum Construction
7. Rear Door Access
8. Powder Coat Finish

Scan this code for Climate Control

Scan this code for Accessories

2301 S. HWY 77 Pauls Valley, OK 73075
T: (405)-665-2876
sales@ddbunlimited.com www.ddbunlimited.com

REVISIONS		
REV.	DESCRIPTION	DATE
A	CREATED WEBSITE DRAWING FOR OD-30DDX-UL50 PER DR-01845	9/17/2018
B	WEB DRAWING HAS BEEN UPDATED TO REMOVE LOGO	3/21/2022

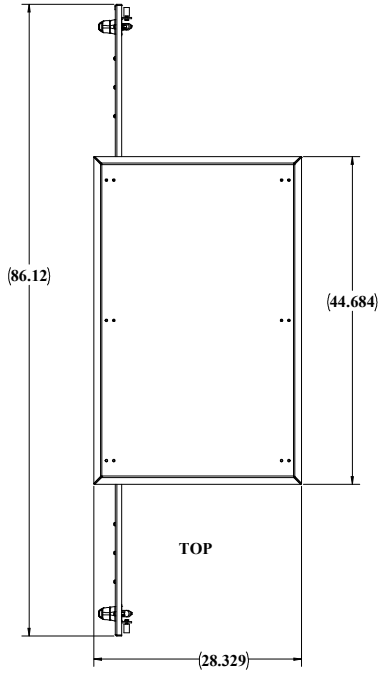

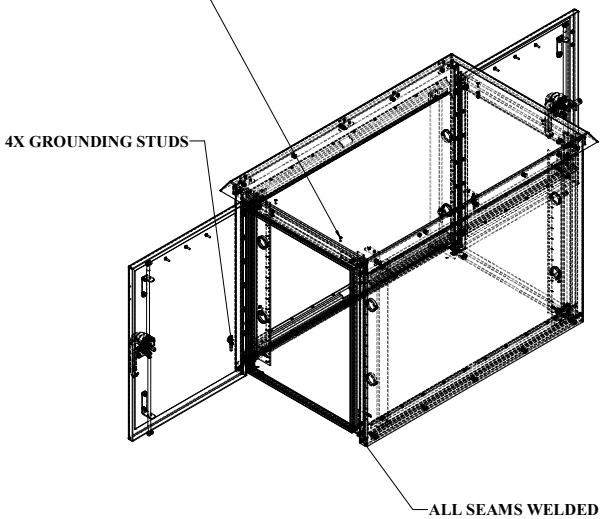

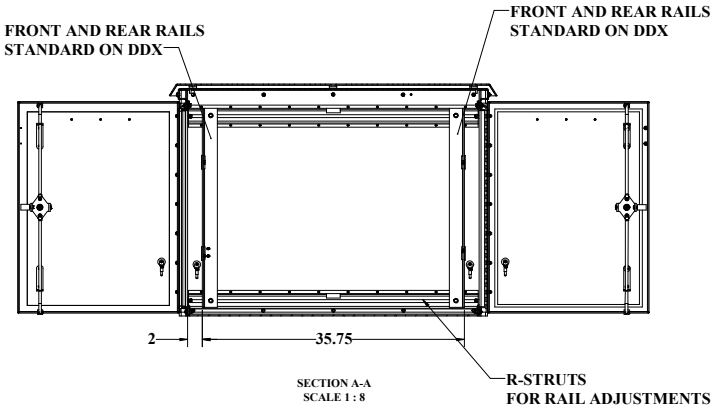

SECTION A-A
SCALE 1 : 8

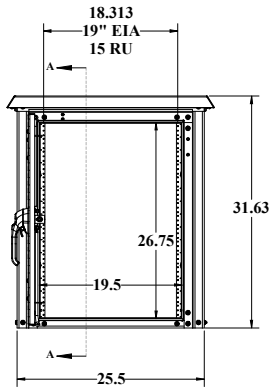

FRONT

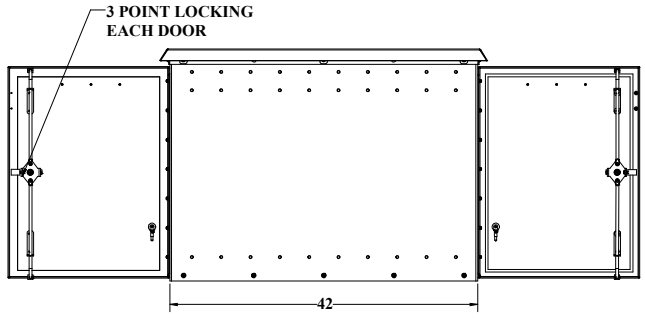

RIGHT

UNLESS OTHERWISE SPECIFIED:	DDB Unlimited Inc.			
DIMENSIONS ARE IN INCHES ANGULAR: ±1° FRACTIONAL/NO DECIMAL: ± 1/32 TWO PLACE DECIMAL: ± 0.030 THREE PLACE DECIMAL: ± 0.010 ALL HOLES ±0.005Ⓜ	OD-30DDX-UL50			
	SIZE	Cage Code:	DWG. NO.:	REV
	D	385Y5	01845	B
MATERIAL: 5052-H32-0.125 ASTM B209-04	SCALE: 1:12	WEIGHT: 120 lbs.		SHEET 1 OF 3
PAINT: DIAMOND VOGEL, BRIDE GLOSS 909WB 81-8320				
DO NOT SCALE DRAWING				

09/19/24

UNCLASSIFIED PUBLIC

File Location: (DDB)(EPDM Vault:)
C:\DDB\DR Requests\Customers\DDB WEB DWG\OD Family-UL50 WEB\OD-30DDX-UL50 WEB\

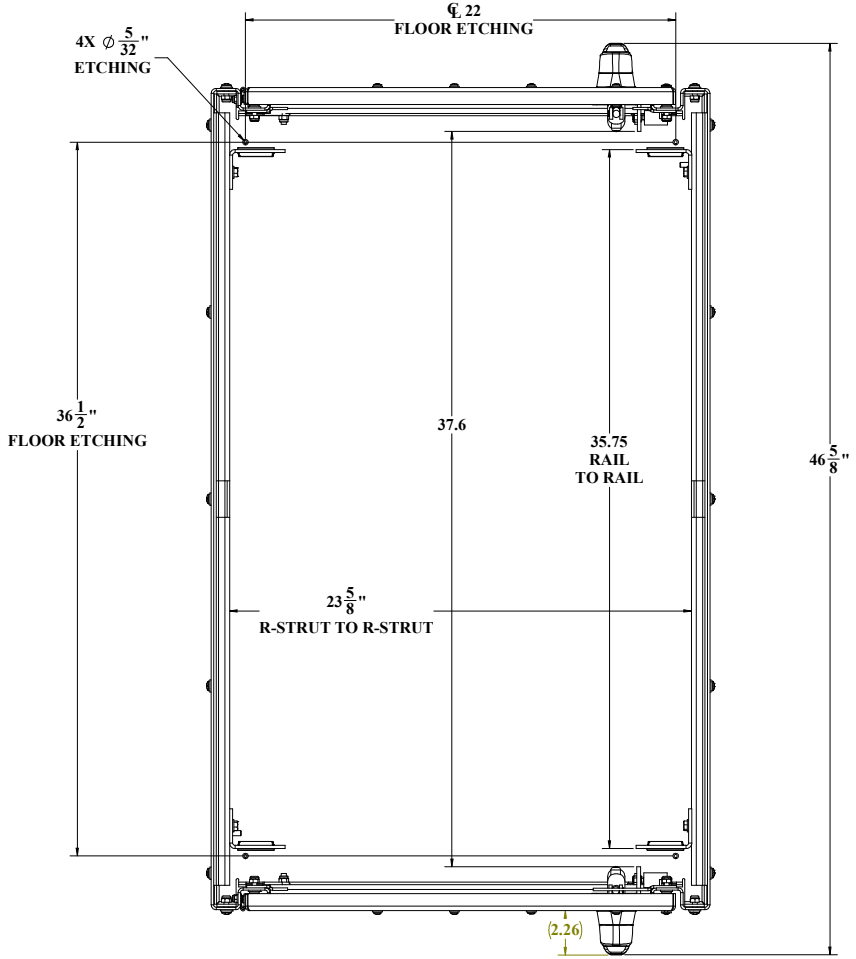

TOP VIEW CEILING AND ALUMASHIELD NOT SHOWN

UNLESS OTHERWISE SPECIFIED:	DDB Unlimited Inc.			
DIMENSIONS ARE IN INCHES ANGULAR: ±1° FRACTIONAL/NO DECIMAL: ±1/32 TWO PLACE DECIMAL: ± 0.020 THREE PLACE DECIMAL: ± 0.0050 ALL HOLES ±0.005Ø	OD-DDX-Closed			
	SIZE	Cage Code:	DWG. NO.:	REV
	D	385Y5	01845	B
MATERIAL: 5052-H32-0.125 ASTM B209-04	SCALE: 1:12	WEIGHT: 120 lbs.		SHEET 2 OF 3
PAINT: DIAMOND VOGEL, BRIDE GLOSS 70XW99 BT-8320				
DO NOT SCALE DRAWING				

09/19/24

UNCLASSIFIED PUBLIC

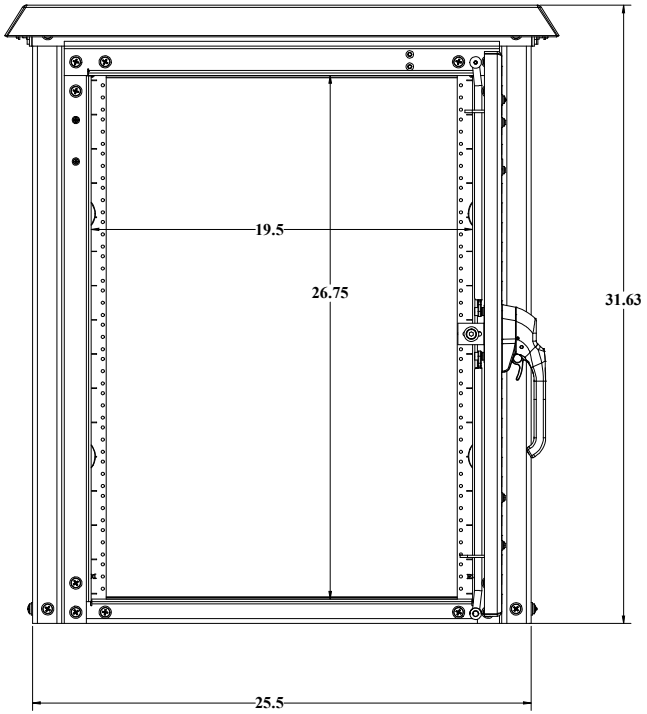

BACK VIEW GASKET NOT SHOWN

UNLESS OTHERWISE SPECIFIED:	DDB Unlimited Inc.
DIMENSIONS ARE IN INCHES	OD-30DDX-UL50
ANGULAR: ±1°	
FRACTIONAL/NO DECIMAL: ± 1/32	
TWO PLACE DECIMAL: ± 0.010	
THREE PLACE DECIMAL: ± 0.005	
ALL HOLES ±0.005Ø	
MATERIAL: 5052-H32-0.125 ASTM B209-04	
PAINT: DIAMOND VOGEL, BRIDE GLOSS 1K/WHT #1-8320	
DO NOT SCALE DRAWING	

SIZE	Cage Code:	DWG. NO.:	REV
D	385Y5	01845	B
SCALE: 1:12	WEIGHT: 120 lbs.		SHEET 3 OF 3

09/19/24

UNCLASSIFIED PUBLIC

File Location: (DDB)(EPDM Vault:)
C:\DDB\DR Requests\Customers\DDB WEB DWG\OD Family-UL50 WEB\OD-30DDX-UL50 WEB\

An ISO 9001 Certified company

UL-50 OD SERIES

OD-50DXC-UL50

Made in America

Believing in American Craftsmanship

15 YEAR WARRANTY

Why Choose the OD-UL Series?

The OD-50DXC-UL50 enclosures are the ultimate choice for your outdoor racking requirements. Being made of our own rugged Alumiflex®, you'll find it noticeably lighter than steel, yet strong enough to rack even the heaviest equipment. When choosing the OD-UL series, you have handpicked the highest value in American construction. The OD-UL series includes the standard features you have come to expect with DDB, incorporating the versatile R-strut system for adjustable racking, the security of a 3- point locking system, our patented Alumishield® solar cap to manage heat loads, door grounding strap, & UL listed gasketing. For those who need more than just our standard enclosure, DDB can also make a truly customized solution with our many available options including HVAC, providing a climate-controlled environment for any electronic equipment, electrical load panels and cable entry solutions to name a few. All of this comes together to create an enclosure able to meet all of the unique needs your customers have been seeking. DDB offers a state-of-the-art design, a competitive price, benchmark lead times and a guaranteed delivery, all backed up with an industry leading 15-year warranty on every enclosure. Put DDB's substantial stock to work for you today. Contact our professional staff to assist you with your made-to-order solution.



Features

15 Year Warranty

0.125" Aluminum Construction

Welded Construction

3-Point Locking System

Front and Rear Access

Stainless Steel External Hardware/Hinge

Custom Colors Available

Water/Rain/Sleet/Dust Tight

Flexible and Scalable

Quick Shipping

Application Types

Telecommunications
Wireless/Broadband
Fiber Optics
Back Haul
Base Station
Small Cell/ DAS
Utility
Public Safety
Military
Trailer-Based Communications
Wi-Fi
Flexible and Scalable
LTEE/4G/5G
Intelligent Traffic



Environmental & Safety Ratings:

- ✓ ETL environmentally listed to UL 50/50E, IP 66, Type 4
- ✓ ETL listed; Safety Requirements, UL 62368-1:2019 Ed.3, CSA C22.2

Weight and Dimensions

Approximate Exterior Enclosure Dimensions:

51”H x 29”W x 30”D

Shipping Dimensions:

42”D x 32W x 60"H- Palletized

Approximate Shipping Weight:

161 lbs.

2301 S. HWY 77 Pauls Valley, OK 73075
T: (405)-665-2876
sales@ddbunlimited.com www.ddbunlimited.com

UL-50 OD SERIES

OD-50DXC-UL50

An ISO 9001 Certified company

Made in America

Believing in American Craftsmanship

15 YEAR WARRANTY



Features

1. Alumishield Solar Cap
2. 19” Adjustable Racking Rails
3. Stainless Steel Door Hinge
4. Door Grounding Strap
5. 3-Point Locking System
6. 0.125" Aluminum Construction
7. Rear Door Access
8. Powder Coat Finish

Scan this code for Climate Control

Scan this code for Accessories

2301 S. HWY 77 Pauls Valley, OK 73075
T: (405)-665-2876
sales@ddbunlimited.com www.ddbunlimited.com

REVISIONS		
REV.	DESCRIPTION	DATE
A	CREATED WEBSITE DRAWING FOR OD-50DX-UL50 PER DR-01849	9/26/2018
B	UPDATED SHEET FORMAT	3/30/2022

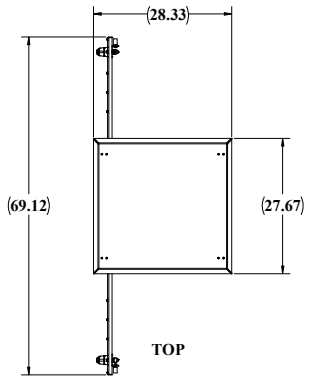

TOP

STANDOFFS STANDARD
FOR OPTIONAL LIGHTING
OVER EACH DOOR.

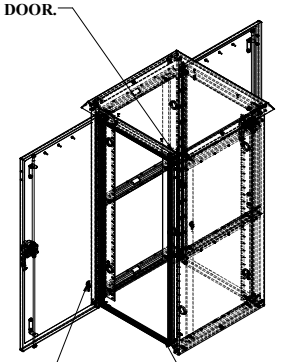

4X GROUNDING STUDS

ALL SEAMS WELDED

FRONT RAILS STANDARD

OPTIONAL REAR SET OF RAILS

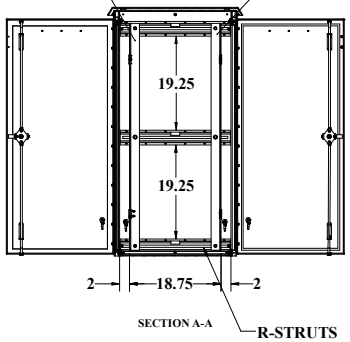

SECTION A-A

R-STRUTS
FOR RAIL ADJUSTMENTS

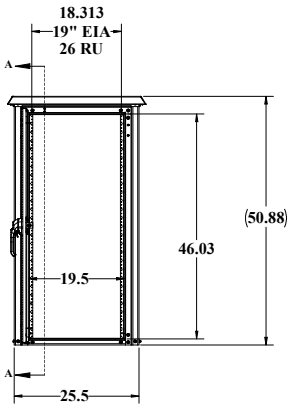

FRONT

3 POINT LOCKING
EACH DOOR

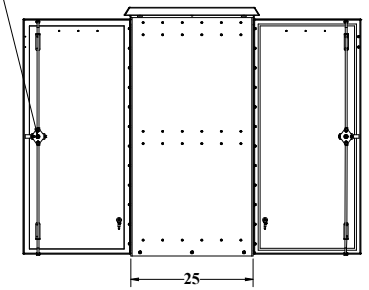

RIGHT SIDE

UNLESS OTHERWISE SPECIFIED:
DIMENSIONS ARE IN INCHES
ANGULAR: ±1°
FRACTIONAL/NO DECIMAL: ±1/32
TWO PLACE DECIMAL: ±0.010
THREE PLACE DECIMAL: ±0.005
ALL HOLES ±0.003 Ⓜ

MATERIAL: 5052-H32-0.125 ASTM B209-04
PAINT: DIAMOND VOGEL BRIDE GLOSS 50X999 BT-8320
DO NOT SCALE DRAWING

DDB Unlimited Inc.
OD-50DX-UL50

SIZE	Cage Code:	DWG. NO.:	REV
D	385Y5	01849	B

SCALE: 1:12 | WEIGHT: 122 lbs. | SHEET 1 OF 3

09/19/24

UNCLASSIFIED PUBLIC

File Location: (DDB)(EPDM Vault:)
C:\DDB\DR Requests\Customers\DDB WEB DWG\OD Family-UL50 WEB\OD-50DX-UL50 WEB\

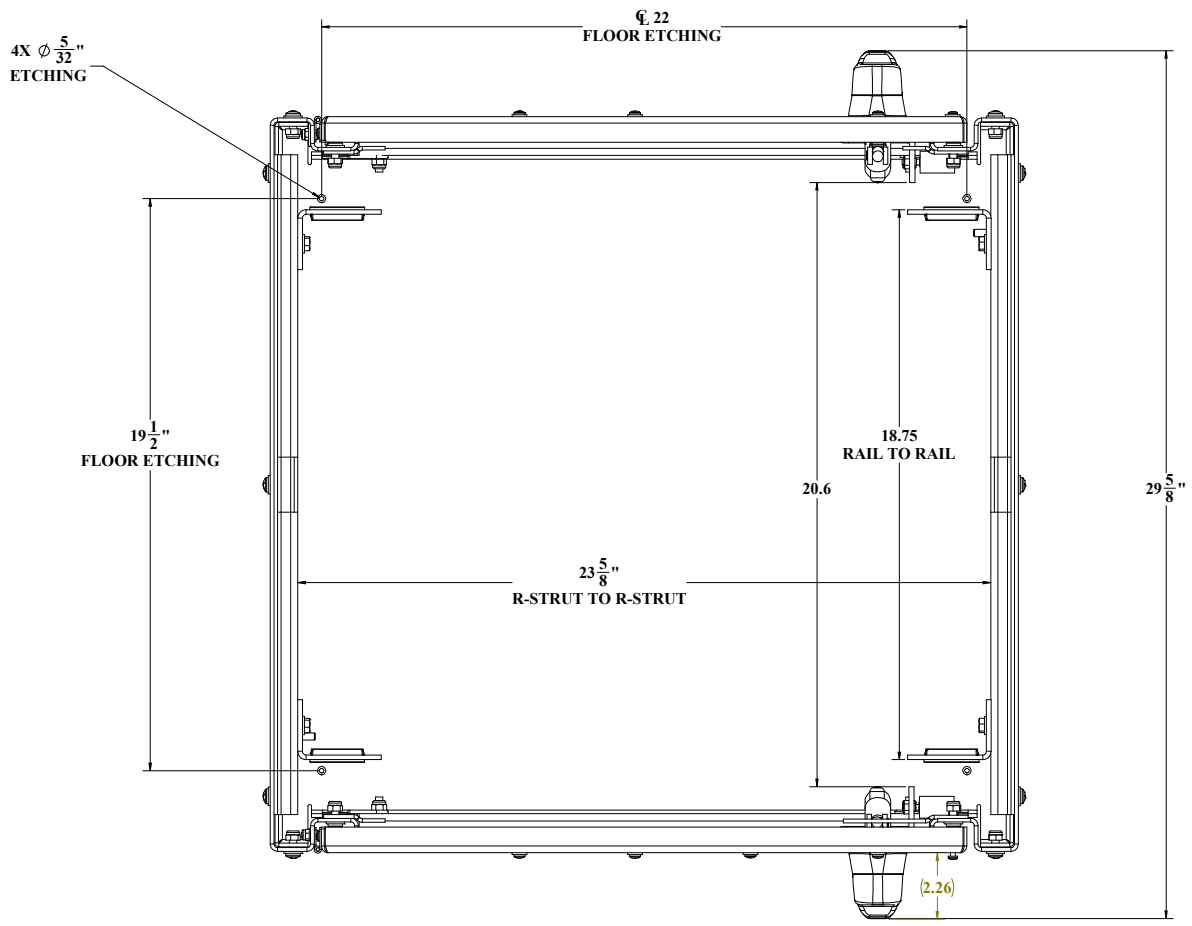

TOP VIEW CEILING AND ALUMASHIELD NOT SHOWN

UNLESS OTHERWISE SPECIFIED:	DDB Unlimited Inc.
DIMENSIONS ARE IN INCHES	OD-DX-Closed
ANGULAR: ±1°	
FRACTIONAL/NO DECIMAL: ± 1/32	
TWO PLACE DECIMAL: ± 0.010	
THREE PLACE DECIMAL: ± 0.005	
ALL HOLES ±0.005Ⓜ	
MATERIAL: 5052-H32-0.125 ASTM B209-04	SIZE: D | Cage Code: 385Y5 | DWG. NO.: 01849 | REV: B
PAINT: DIAMOND VOGEL BRIDE GLOSS 1K/WHT #1 #220	SCALE: 1:12 | WEIGHT: 87 lbs. | SHEET 2 OF 3
DO NOT SCALE DRAWING	

09/19/24

UNCLASSIFIED PUBLIC

File Location: (DDB)(EPDM Vault:)
C:\DDB\DR Requests\Customers\DDB WEB DWG\OD Family-UL50 WEB\OD-50DX-UL50 WEB\

DOOR GASKET HIDDEN

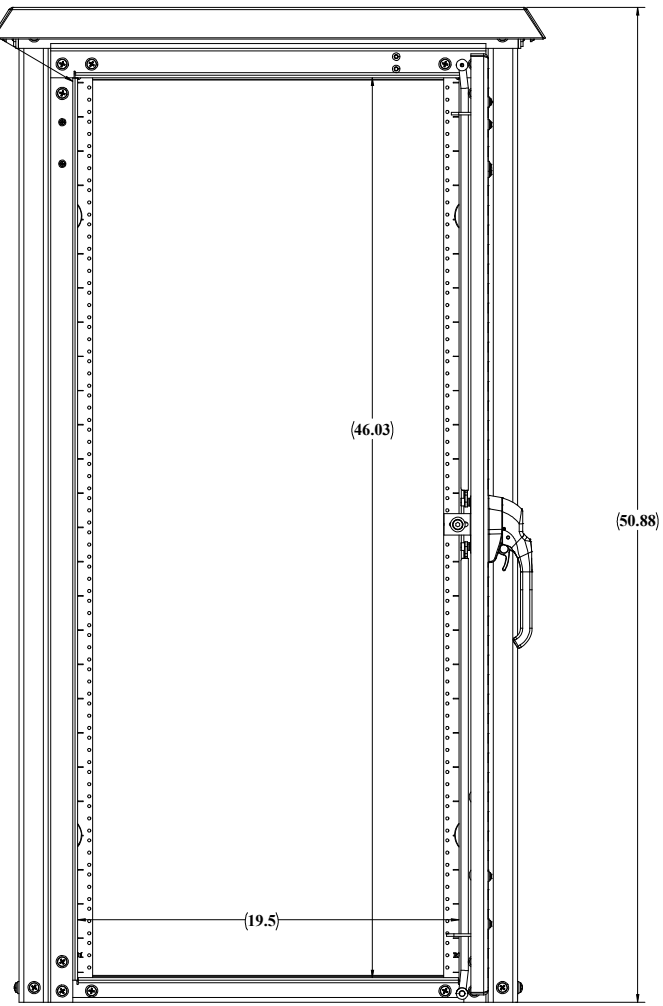

BACK VIEW

UNLESS OTHERWISE SPECIFIED:	DDB Unlimited Inc.			
DIMENSIONS ARE IN INCHES ANGULAR: ±1° FRACTIONAL/NO DECIMAL: ±1/32 TWO PLACE DECIMAL: ± 0.030 THREE PLACE DECIMAL: ± 0.010 ALL HOLES ±0.005Ø	OD-50DX-UL50			
	SIZE	Cage Code:	DWG. NO.:	REV
	D	385Y5	01849	B
MATERIAL: 5052-H32-0.125 ASTM B209-04	SCALE: 1:12	WEIGHT: 122 lbs.		SHEET 3 OF 3
PAINT: DIAMOND VOGEL BRIDE GLOSS 70XW4E 81-8320				
DO NOT SCALE DRAWING				

09/19/24

UNCLASSIFIED PUBLIC

File Location: (DDB)(EPDM Vault:)
C:\DDB\DR Requests\Customers\DDB WEB DWG\OD Family-UL50 WEB\OD-50DX-UL50 WEB\

UL-50 OD SERIES

OD-50DDC-UL50

An ISO 9001 Certified company

Made in America

Believing in American Craftsmanship

15 YEAR WARRANTY

Why Choose the OD-UL Series?



The OD-50DDC-UL50 enclosures are the ultimate choice for your outdoor racking requirements. Being made of our own rugged Alumiflex®, you'll find it noticeably lighter than steel, yet strong enough to rack even the heaviest equipment. When choosing the OD-UL series, you have handpicked the highest value in American construction. The OD-UL series includes the standard features you have come to expect with DDB, incorporating the versatile R-strut system for adjustable racking, the security of a 3- point locking system, our patented Alumishield® solar cap to manage heat loads, door grounding strap, & UL listed gasketing. For those who need more than just our standard enclosure, DDB can also make a truly customized solution with our many available options including HVAC, providing a climate-controlled environment for any electronic equipment, electrical load panels and cable entry solutions to name a few. All of this comes together to create an enclosure able to meet all of the unique needs your customers have been seeking. DDB offers a state-of-the-art design, a competitive price, benchmark lead times and a guaranteed delivery, all backed up with an industry leading 15-year warranty on every enclosure. Put DDB's substantial stock to work for you today. Contact our professional staff to assist you with your made-to-order solution.

Application Types

Telecommunications
Wireless/Broadband
Fiber Optics
Back Haul
Base Station
Small Cell/ DAS
Utility
Public Safety
Military
Trailer-Based Communications
Wi-Fi
Flexible and Scalable
LTEE/4G/5G
Intelligent Traffic

2301 S. HWY 77 Pauls Valley, OK 73075
T: (405)-665-2876
sales@ddbunlimited.com www.ddbunlimited.com



Environmental & Safety Ratings:

- ✓ ETL environmentally listed to UL 50/50E, IP 66, Type 4
- ✓ ETL listed; Safety Requirements, UL 62368-1:2019 Ed.3, CSA C22.2

Features

15 Year Warranty
0.125" Aluminum Construction
Welded Construction
3-Point Locking System
Front and Rear Access
Stainless Steel External Hardware/Hinge
Custom Colors Available
Water/Rain/Sleet/Dust Tight
Flexible and Scalable
Quick Shipping

Weight and Dimensions

Approximate Exterior Enclosure Dimensions:
51”H x 29”W x 39”D
Shipping Dimensions:
42”D x 32”W x 60"H- Palletized
Approximate Shipping Weight:
188 lbs.

UL-50 OD SERIES

OD-50DDC-UL50

An ISO 9001 Certified company

Made in America

Believing in American Craftsmanship

15 YEAR WARRANTY



Features

1. Alumishield Solar Cap
2. 19” Adjustable Racking Rails
3. Stainless Steel Door Hinge
4. Door Grounding Strap
5. 3-Point Locking System
6. 0.125" Aluminum Construction
7. Rear Door Access
8. Powder Coat Finish

Scan this code for Climate Control

Scan this code for Accessories

2301 S. HWY 77 Pauls Valley, OK 73075
T: (405)-665-2876
sales@ddbunlimited.com www.ddbunlimited.com

REVISIONS		
REV.	DESCRIPTION	DATE
A	CREATED WEBSITE DRAWING FOR OD-50DD-UL50 PER DR-01850	9/26/2018
B	UPADATED SHEET FORMAT	3/29/2022

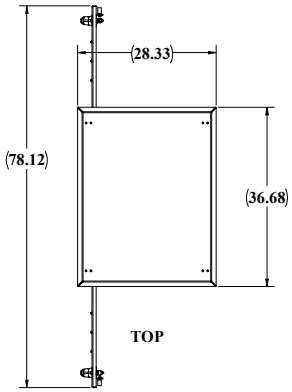

STANDOFFS STANDARD
FOR OPTIONAL LIGHTING
OVER EACH DOOR.

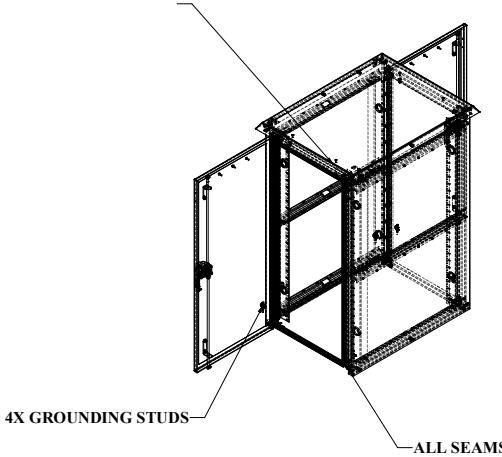

FRONT AND REAR RAILS
STANDARD

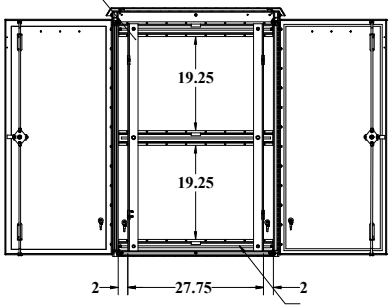

SECTION A-A

R-STRUTS
FOR RAIL ADJUSTMENTS

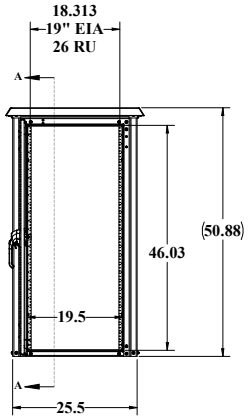

FRONT

3 POINT LOCKING
EACH DOOR

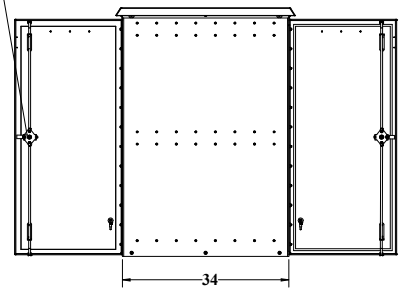

RIGHT SIDE

UNLESS OTHERWISE SPECIFIED:	DDB Unlimited Inc.			
DIMENSIONS ARE IN INCHES ANGULAR: ±1° FRACTIONAL/NO DECIMAL: ±1/32 TWO PLACE DECIMAL: ±0.010 THREE PLACE DECIMAL: ±0.005 FOUR PLACE DECIMAL: ±0.0050 ALL HOLES ±0.003Ø	OD-50DD-UL50			
	SIZE	Cage Code:	DWG. NO.:	REV
	D	385Y5	01850	B
MATERIAL: 5052-H32-0.125 ASTM B209-04	SCALE: 1:12	WEIGHT: 145 lbs.		SHEET 1 OF 3
PAINT: DIAMOND VOGEL, BRIDE GLOSS 70X9WE 81-8320				
DO NOT SCALE DRAWING				

09/19/24

UNCLASSIFIED PUBLIC

File Location: (DDB)(EPDM Vault:)
C:\DDB\DR Requests\Customers\DDB WEB DWG\OD Family-UL50 WEB\OD-50DD-UL50 WEB\

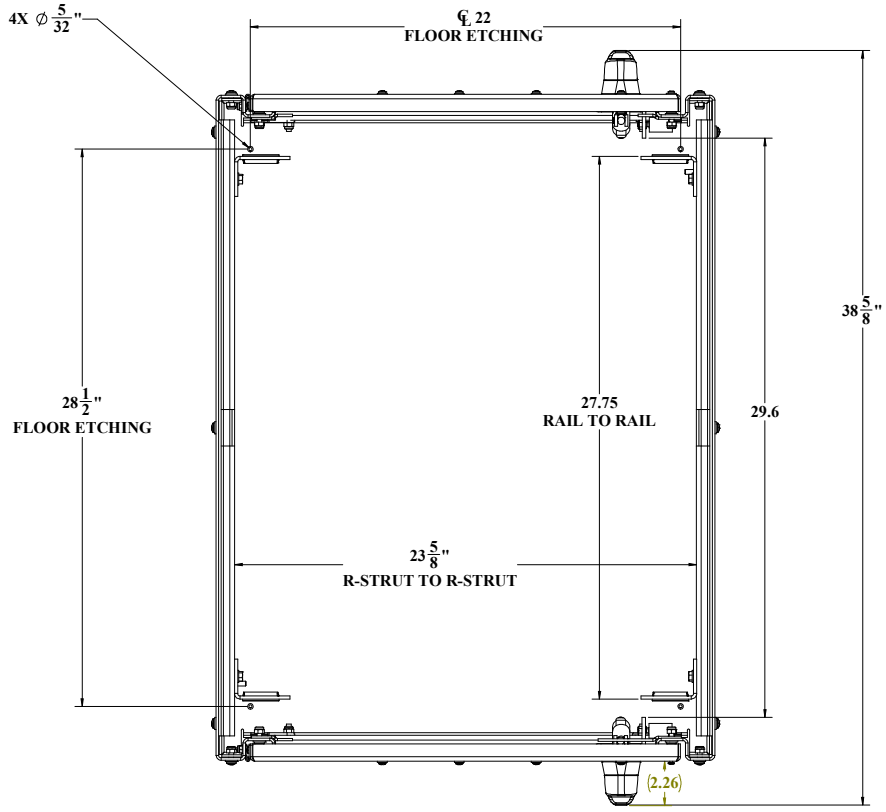

TOP VIEW CEILING AND ALUMASHIELD NOT SHOWN

UNLESS OTHERWISE SPECIFIED:	DDB Unlimited Inc.			
DIMENSIONS ARE IN INCHES ANGULAR: ±1° FRACTIONAL/NO DECIMAL: ± 1/32 TWO PLACE DECIMAL: ± 0.020 TWO PLACE DECIMAL: ± 0.005 THREE PLACE DECIMAL: ± 0.0150 ALL HOLES ±0.005Ⓜ	OD-DD-Closed			
	SIZE	Cage Code:	DWG. NO.:	REV
	D	385Y5	01850	B
MATERIAL: 5052-H32-0.125 ASTM B209-04	SCALE: 1:12	WEIGHT: 104 lbs.		SHEET 2 OF 3
PAINT: DIAMOND VOGEL, BRISK GLOSS 1K/WHT #1-8320				
DO NOT SCALE DRAWING				

09/19/24

UNCLASSIFIED PUBLIC

DOOR GASKET HIDDEN

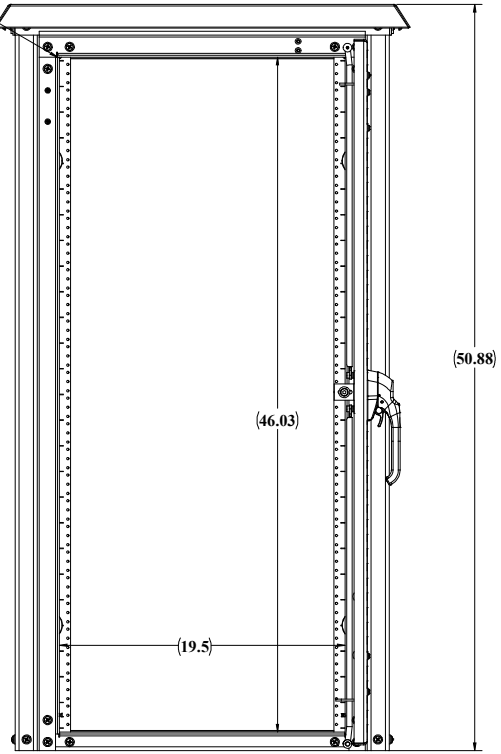

BACK VIEW

UNLESS OTHERWISE SPECIFIED:	DDB Unlimited Inc.			
DIMENSIONS ARE IN INCHES ANGULAR: ±1° FRACTIONAL/NO DECIMAL: ± 1/32 TWO PLACE DECIMAL: ± 0.030 TWO PLACE DECIMAL: ± 0.0050 THREE PLACE DECIMAL: ± 0.0150 ALL HOLES ±0.005Ø	OD-50DD-UL50			
	SIZE	Cage Code:	DWG. NO.:	REV
	D	385Y5	01850	B
MATERIAL: 5052-H32-0.125 ASTM B209-04	SCALE: 1:12	WEIGHT: 145 lbs.		SHEET 3 OF 3
PAINT: DIAMOND VOGEL BRIDE GLOSS 1K/WHI 81-8320				
DO NOT SCALE DRAWING				

09/19/24

UNCLASSIFIED PUBLIC

File Location: (DDB)(EPDM Vault:)
C:\DDB\DR Requests\Customers\DDB WEB DWG\OD Family-UL50 WEB\OD-50DD-UL50 WEB\

DDB UNLIMITED®

An ISO 9001 Certified company

UL-50 OD SERIES

OD-50DDXC-UL50

Made in America

Believing in American Craftsmanship

15 YEAR WARRANTY

Why Choose the OD-UL Series?



The OD-50DDXC-UL50 enclosures are the ultimate choice for your outdoor racking requirements. Being made of our own rugged Alumiflex®, you'll find it noticeably lighter than steel, yet strong enough to rack even the heaviest equipment. When choosing the OD-UL series, you have handpicked the highest value in American construction. The OD-UL series includes the standard features you have come to expect with DDB, incorporating the versatile R-strut system for adjustable racking, the security of a 3- point locking system, our patented Alumishield® solar cap to manage heat loads, door grounding strap, & UL listed gasketing. For those who need more than just our standard enclosure, DDB can also make a truly customized solution with our many available options including HVAC, providing a climate-controlled environment for any electronic equipment, electrical load panels and cable entry solutions to name a few. All of this comes together to create an enclosure able to meet all of the unique needs your customers have been seeking. DDB offers a state-of-the-art design, a competitive price, benchmark lead times and a guaranteed delivery, all backed up with an industry leading 15-year warranty on every enclosure. Put DDB's substantial stock to work for you today. Contact our professional staff to assist you with your made-to-order solution.

Application Types

Telecommunications
Wireless/Broadband
Fiber Optics
Back Haul
Base Station
Small Cell/ DAS
Utility
Public Safety
Military
Trailer-Based Communications
Wi-Fi
Flexible and Scalable
LTEE/4G/5G
Intelligent Traffic



Environmental & Safety Ratings:

- ✓ ETL environmentally listed to UL 50/50E, IP 66, Type 4
- ✓ ETL listed; Safety Requirements, UL 62368-1:2019 Ed.3, CSA C22.2

Features

15 Year Warranty
0.125" Aluminum Construction
Welded Construction
3-Point Locking System
Front and Rear Access
Stainless Steel External Hardware/Hinge
Custom Colors Available
Water/Rain/Sleet/Dust Tight
Flexible and Scalable
Quick Shipping

Weight and Dimensions

Approximate Exterior Enclosure Dimensions:
51”H x 29”W x 47”D
Shipping Dimensions:
52”D x 32”W x 60”H- Palletized
Approximate Shipping Weight:
211 lbs.

2301 S. HWY 77 Pauls Valley, OK 73075
T: (405)-665-2876
sales@ddbunlimited.com www.ddbunlimited.com

UL-50 OD SERIES

OD-50DDXC-UL50

An ISO 9001 Certified company

Made in America

Believing in American Craftsmanship

15 YEAR WARRANTY



Features

1. Alumishield Solar Cap
2. 19” Adjustable Racking Rails
3. Stainless Steel Door Hinge
4. 3-Point Locking System
5. 0.125" Aluminum Construction
6. Door Grounding Strap
7. Rear Door Access
8. Powder Coat Finish

Scan this code for Climate Control

Scan this code for Accessories

2301 S. HWY 77 Pauls Valley, OK 73075
T: (405)-665-2876
sales@ddbunlimited.com www.ddbunlimited.com

REVISIONS		
REV.	DESCRIPTION	DATE
A	CREATED WEBSITE DRAWING FOR OD-50DDX-UL50 PER DR-01851	9/27/2018
B	UPDATED SHEET FORMAT	3/30/2022

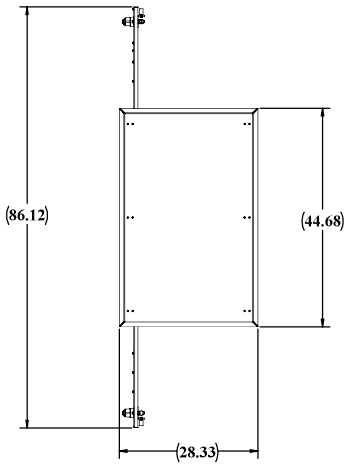

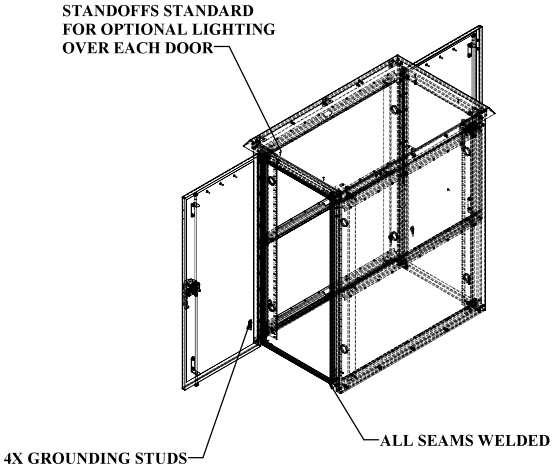

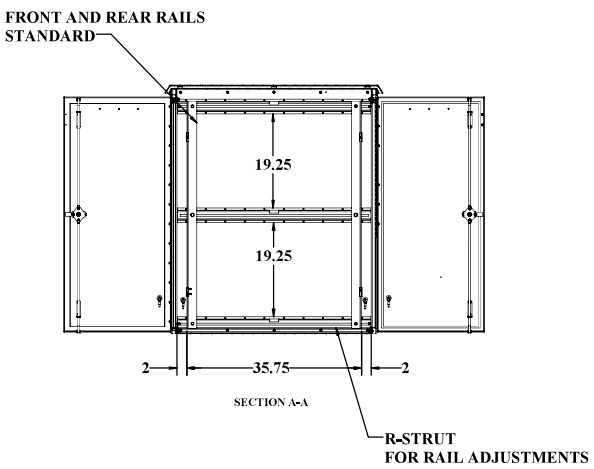

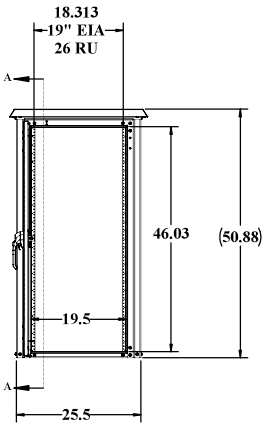

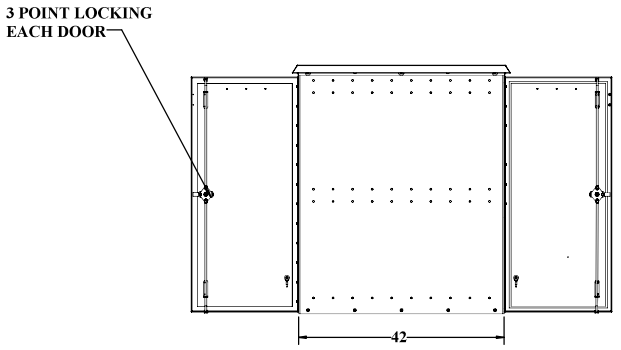

UNLESS OTHERWISE SPECIFIED:	DDB Unlimited Inc.			
DIMENSIONS ARE IN INCHES ANGULAR: ±1° FRACTIONAL: NO DECIMAL: ±1/16 TWO PLACE DECIMAL: ±.010 THREE PLACE DECIMAL: ±.005	OD-50DDX-UL50 Enclosure, OD, 50, DDX, UL50OD-50DDX-UL50			
ALL HOLES ⌀ ⌀ ⌀	SIZE	Cage Code:	DWG. NO.:	REV
MATERIAL: Material - not specified -	D	3S5Y5	01851	B
PAINT:	SCALE: 1:12	WEIGHT: 165 lbs.		SHEET 1 OF 3
DO NOT SCALE DRAWING				

UNCLASSIFIED PUBLIC

File Location: (DDB) (EPDM Vault)
C:\DDB\DR Requests\Customers\DDB WEB DWG\OD Family-UL50 WEB\OD-50DDX-UL50 WEB\

DDB FORM 7.1-REV K 08/02/17

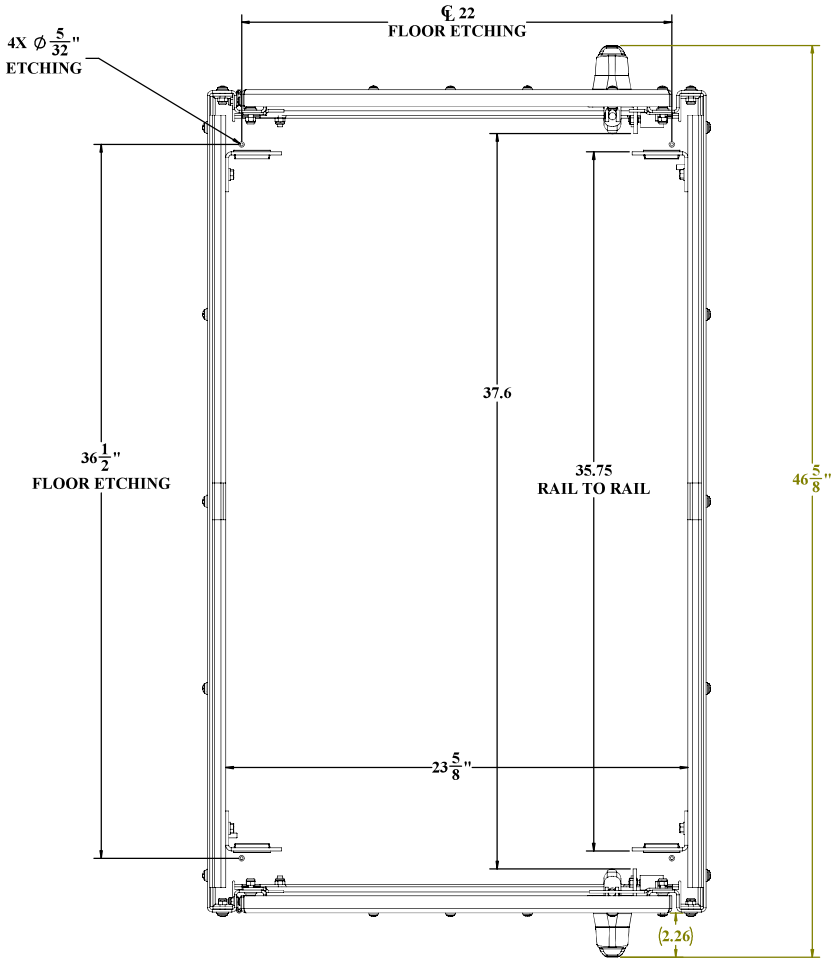

TOP VIEW CEILING AND ALUMASHIELD NOT SHOWN

UNLESS OTHERWISE SPECIFIED:	DDB Unlimited Inc.		
DIMENSIONS ARE IN INCHES ANGULAR: ±1° FRACTIONAL: ±1/64 TWO PLACE DECIMAL: ±.010 THREE PLACE DECIMAL: ±.005 ALL HOLES ⌀.005Ⓜ	OD-DDX-Closed Enclosure, OD, DDX, UL50, Closed		
	SIZE: D	Cage Code: 385Y5	DWG. NO.: 01851 REV: B
MATERIAL: 5052-H32XX 12Ga ASTM B209-04			
PAINT: Diamond Vogel, Beige Gloss Texture F5-9310	SCALE: 1:12	WEIGHT: 120 lbs.	SHEET 2 OF 3
DO NOT SCALE DRAWING			

DDB FORM 7.1-REV K 08/03/17

UNCLASSIFIED PUBLIC

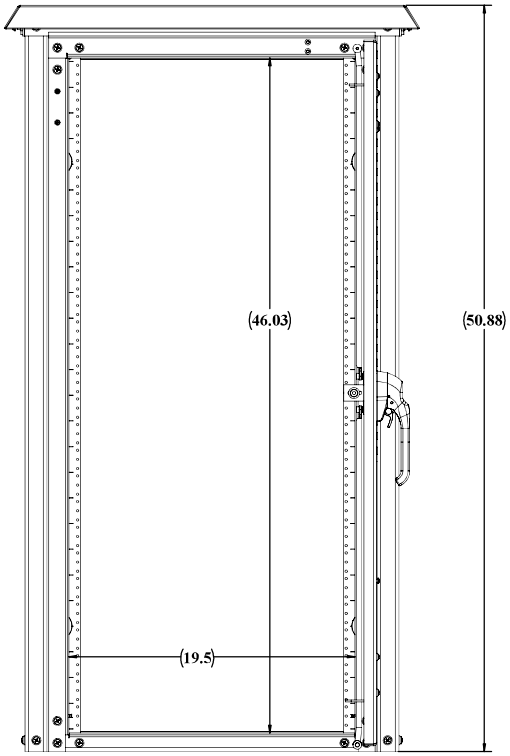

BACK VIEW

UNLESS OTHERWISE SPECIFIED:	DDB Unlimited Inc.		
DIMENSIONS ARE IN INCHES ANGULAR: FRACTIONAL: NO DECIMAL: TWO PLACE DECIMAL: THREE PLACE DECIMAL: ALL HOLES ⌀	OD-50DDX-UL50 Enclosure, OD, 50, DDX, UL50		
	SIZE: D	Cage Code: 385Y5	DWG. NO.: 01851 REV: B
MATERIAL: 5052-H32 SEE FIN-ASTM B209-04	SCALE: 1:12	WEIGHT: 165 lbs.	SHEET 3 OF 3
PAINT: Diamond Vogel, Beige Gloss Texture FT-5320			
DO NOT SCALE DRAWING			

DDB FORM 7.1-REV K 08/03/17

UNCLASSIFIED PUBLIC

File Location: (DDB) (EPDM Vault)
C:\DDB\DR Requests\Customers\DDB WEB DWG\OD Family-UL50 WEB\OD-50DDX-UL50 WEB\

An ISO 9001 Certified company

UL-50 OD SERIES

OD-62DXC-UL50

Made in America

Believing in American Craftsmanship

15 YEAR WARRANTY

Why Choose the OD-UL Series?



The OD-62DXC-UL50 enclosures are the ultimate choice for your outdoor racking requirements. Being made of our own rugged Alumiflex®, you'll find it noticeably lighter than steel, yet strong enough to rack even the heaviest equipment. When choosing the OD-UL series, you have handpicked the highest value in American construction. The OD-UL series includes the standard features you have come to expect with DDB, incorporating the versatile R-strut system for adjustable racking, the security of a 3- point locking system, our patented Alumishield® solar cap to manage heat loads, door grounding strap, & UL listed gasketing. For those who need more than just our standard enclosure, DDB can also make a truly customized solution with our many available options including HVAC, providing a climate-controlled environment for any electronic equipment, electrical load panels and cable entry solutions to name a few. All of this comes together to create an enclosure able to meet all of the unique needs your customers have been seeking. DDB offers a state-of-the-art design, a competitive price, benchmark lead times and a guaranteed delivery, all backed up with an industry leading 15-year warranty on every enclosure. Put DDB's substantial stock to work for you today. Contact our professional staff to assist you with your made-to-order solution.

Application Types

Telecommunications
Wireless/Broadband
Fiber Optics
Back Haul
Base Station
Small Cell/ DAS
Utility
Public Safety
Military
Trailer-Based
Communications
Wi-Fi
Flexible and Scalable
LTEE/4G/5G
Intelligent Traffic



Environmental & Safety Ratings:

- ✓ ETL environmentally listed to UL 50/50E, IP 66, Type 4
- ✓ ETL listed; Safety Requirements, UL 62368-1:2019 Ed.3, CSA C22.2

Features

15 Year Warranty
0.125" Aluminum Construction
Welded Construction
3-Point Locking System
Front and Rear Access
Stainless Steel External Hardware/Hinge
Custom Colors Available
Water/Rain/Sleet/Dust Tight
Flexible and Scalable
Quick Shipping

Weight and Dimensions

Approximate Exterior Enclosure Dimensions:
64”H x 29”W x 30”D
Shipping Dimensions:
42”D x 32”W x 72"H- Palletized
Approximate Shipping Weight:
184 lbs.

2301 S. HWY 77 Pauls Valley, OK 73075
T: (405)-665-2876
sales@ddbunlimited.com www.ddbunlimited.com

DDB UNLIMITED®

An ISO 9001 Certified company

UL-50 OD SERIES

OD-62DXC-UL50

Made in America

Believing in American Craftsmanship

15 YEAR WARRANTY



Features

1. Alumishield Solar Cap
2. 19” Adjustable Racking Rails
3. Stainless Steel Door Hinge
4. Door Grounding Strap
5. 3-Point Locking System
6. 0.125" Aluminum Construction
7. Rear Door Access
8. Powder Coat Finish

2301 S. HWY 77 Pauls Valley, OK 73075
T: (405)-665-2876
sales@ddbunlimited.com www.ddbunlimited.com

Scan this code for Climate Control

Scan this code for Accessories

REVISIONS		
REV.	DESCRIPTION	DATE
A	CREATED WEBSITE DRAWING FOR OD-62DX-UL50 PER DR-01852	9/27/2018
B	UPDATED SHEET FORMAT	4/14/2022

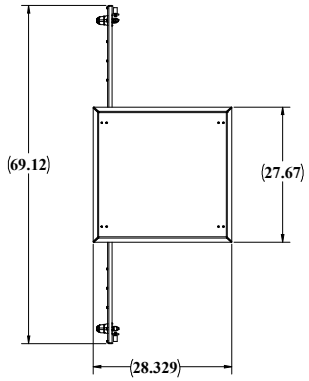

TOP

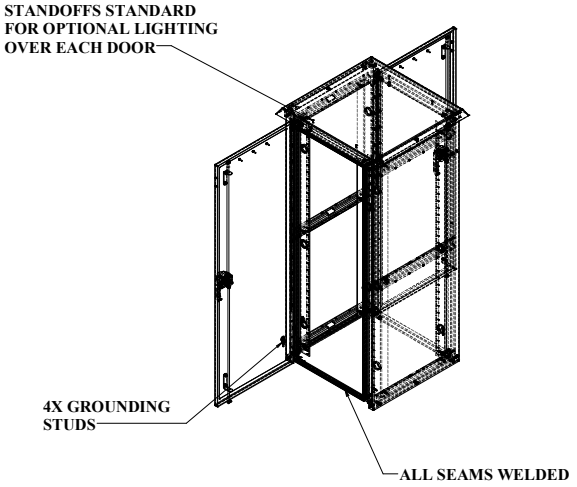

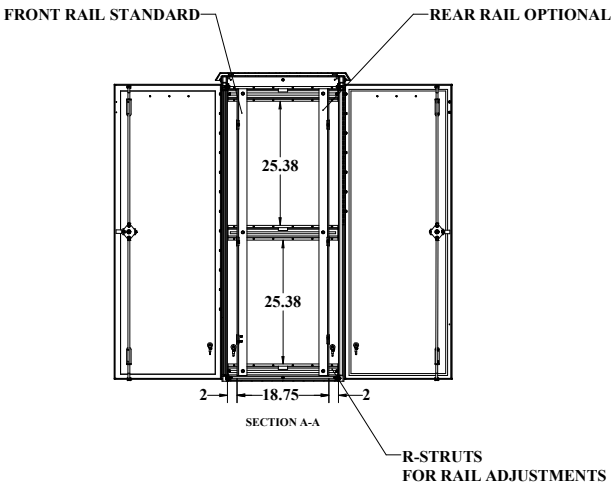

SECTION A-A

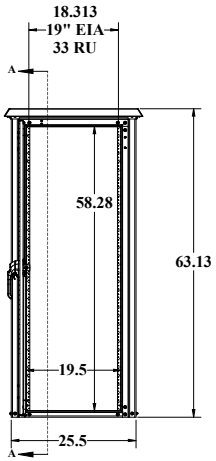

FRONT

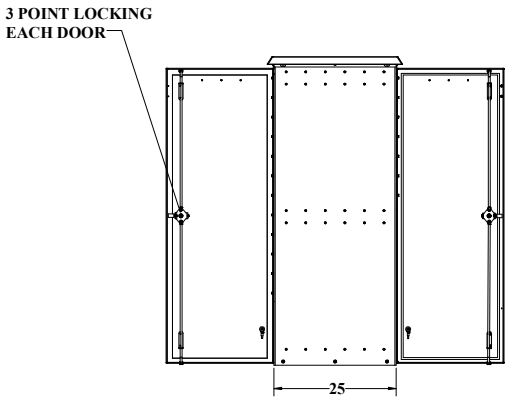

RIGHT SIDE

UNLESS OTHERWISE SPECIFIED:
DIMENSIONS ARE IN INCHES
ANGULAR: ±1°
FRACTIONAL/NO DECIMAL: ±1/32
TWO PLACE DECIMAL: ±0.010
THREE PLACE DECIMAL: ±0.005
ALL HOLES ±0.003Ø

MATERIAL: 5052-H32-0.125 ASTM B209-04
PAINT: DIAMOND VOGEL BRIDE GLOSS 50/60/80 BT-8320
DO NOT SCALE DRAWING

DDB Unlimited Inc.
OD-62DX-UL50

SIZE	Cage Code:	DWG. NO.:	REV
D	385Y5	01852	B

SCALE: 1:12 | WEIGHT: 143 lbs. | SHEET 1 OF 3

09/19/24

UNCLASSIFIED PUBLIC

File Location: (DDB)(EPDM Vault:)
C:\DDB\DR Requests\Customers\DDB WEB DWG\OD Family-UL50 WEB\OD-62DX-UL50 WEB\

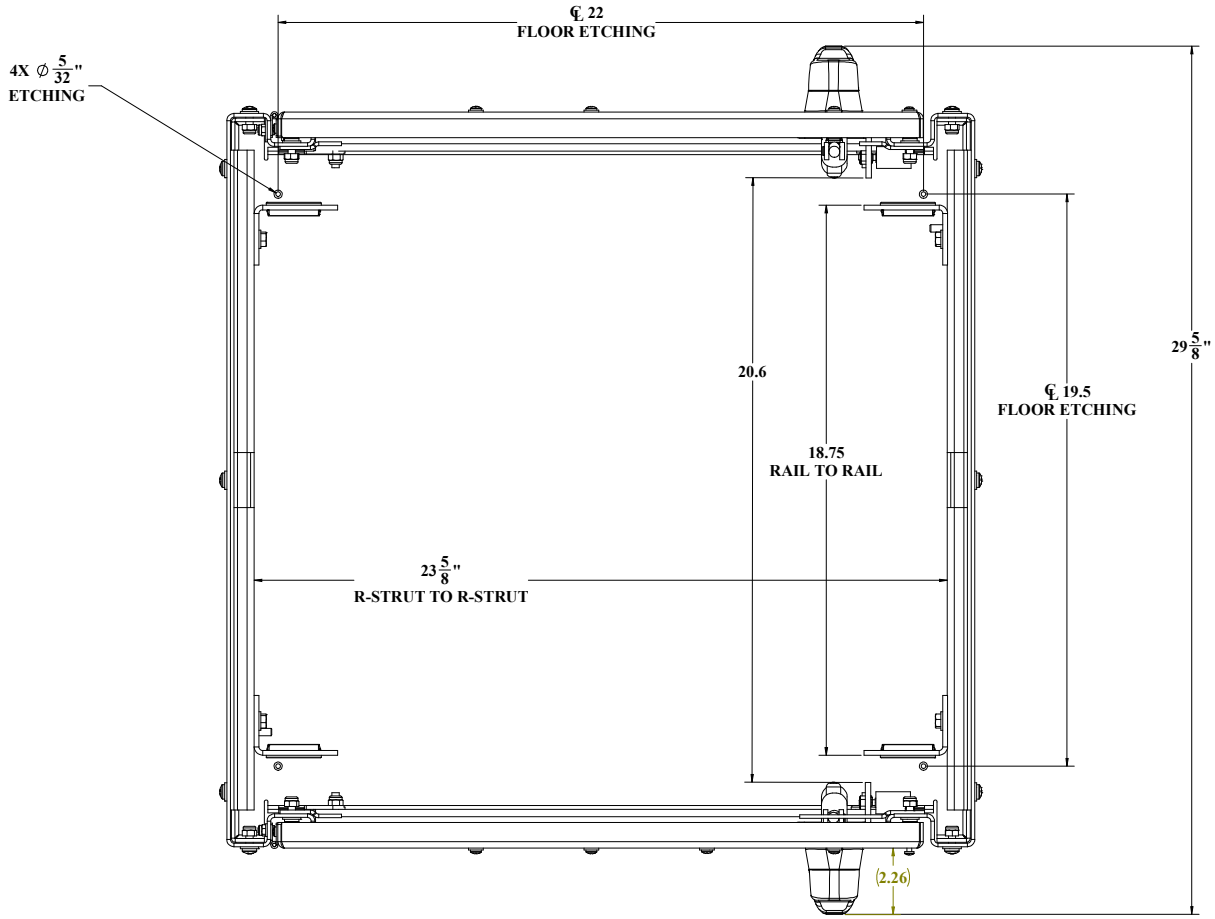

TOP VIEW CEILING AND ALUMASHIELD NOT SHOWN

UNLESS OTHERWISE SPECIFIED: DIMENSIONS ARE IN INCHES. ANGULAR: ±1°. FRACTIONAL/NO DECIMAL: ± 1/32. TWO PLACE DECIMAL: ± 0.010. THREE PLACE DECIMAL: ± 0.005. ALL HOLES ±0.003Ⓜ	DDB Unlimited Inc. OD-DX-Closed		
	SIZE: D	Cage Code: 385Y5	DWG. NO.: 01852 REV: B
MATERIAL: 5052-H32-0.125 ASTM B209-04	SCALE: 1:12	WEIGHT: 87 lbs.	SHEET 2 OF 3
PAINT: DIAMOND VOGEL BRIDE GLOSS 1K/WHT 81-8320			
DO NOT SCALE DRAWING			

09/19/24

UNCLASSIFIED PUBLIC

File Location: (DDB)(EPDM Vault:)
C:\DDB\DR Requests\Customers\DDB WEB DWG\OD Family-UL50 WEB\OD-62DX-UL50 WEB\

DOOR GASKET SHOWN

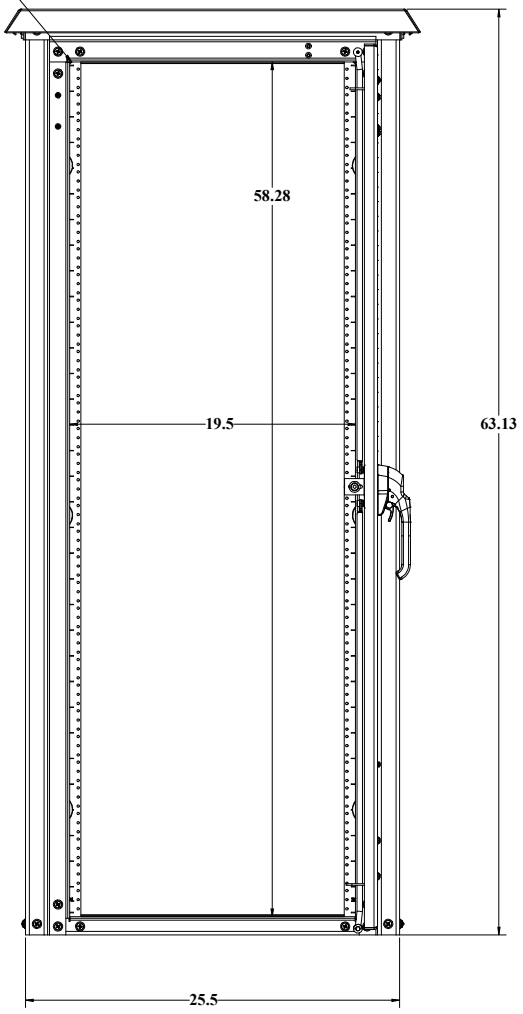

REAR VIEW

UNLESS OTHERWISE SPECIFIED:	DDB Unlimited Inc.			
DIMENSIONS ARE IN INCHES ANGULAR: ±1° FRACTIONAL/NO DECIMAL: ± 1/32 TWO PLACE DECIMAL: ± 0.030 TWO PLACE DECIMAL: ± 0.0050 THREE PLACE DECIMAL: ± 0.0150 ALL HOLES ±0.005Ø	OD-62DX-UL50			
	SIZE	Cage Code:	DWG. NO.:	REV
	D	385Y5	01852	B
MATERIAL: 5052-H32-0.125 ASTM B209-04	SCALE: 1:12	WEIGHT: 143 lbs.		SHEET 3 OF 3
PAINT: DIAMOND VOGEL BRIDE GLOSS 909W8 BT-8320				
DO NOT SCALE DRAWING				

09/19/24

UNCLASSIFIED PUBLIC

File Location: (DDB)(EPDM Vault:)
C:\DDB\DR Requests\Customers\DDB WEB DWG\OD Family-UL50 WEB\OD-62DX-UL50 WEB\

An ISO 9001 Certified company

UL-50 OD SERIES

OD-62DDC-UL50

Made in America

Believing in American Craftsmanship

15 YEAR WARRANTY

Why Choose the OD-UL Series?



The OD-62DDC-UL50 enclosures are the ultimate choice for your outdoor racking requirements. Being made of our own rugged Alumiflex®, you'll find it noticeably lighter than steel, yet strong enough to rack even the heaviest equipment. When choosing the OD-UL series, you have handpicked the highest value in American construction. The OD-UL series includes the standard features you have come to expect with DDB, incorporating the versatile R-strut system for adjustable racking, the security of a 3- point locking system, our patented Alumishield® solar cap to manage heat loads, door grounding strap, & UL listed gasketing. For those who need more than just our standard enclosure, DDB can also make a truly customized solution with our many available options including HVAC, providing a climate-controlled environment for any electronic equipment, electrical load panels and cable entry solutions to name a few. All of this comes together to create an enclosure able to meet all of the unique needs your customers have been seeking. DDB offers a state-of-the-art design, a competitive price, benchmark lead times and a guaranteed delivery, all backed up with an industry leading 15-year warranty on every enclosure. Put DDB's substantial stock to work for you today. Contact our professional staff to assist you with your made-to-order solution.

Features

15 Year Warranty

0.125" Aluminum Construction

Welded Construction

3-Point Locking System

Front and Rear Access

Stainless Steel External Hardware/Hinge

Custom Colors Available

Water/Rain/Sleet/Dust Tight

Flexible and Scalable

Quick Shipping

Application Types

Telecommunications
Wireless/Broadband
Fiber Optics
Back Haul
Base Station
Small Cell/ DAS
Utility
Public Safety
Military
Trailer-Based Communications
Wi-Fi
Flexible and Scalable
LTEE/4G/5G
Intelligent Traffic



Environmental & Safety Ratings:

- ✓ ETL environmentally listed to UL 50/50E, IP 66, Type 4
- ✓ ETL listed; Safety Requirements, UL 62368-1:2019 Ed.3, CSA C22.2

Weight and Dimensions

Approximate Exterior Enclosure Dimensions:

64”H x 29”W x 39”D

Shipping Dimensions:

42”D x 32”W x 72"H- Palletized

Approximate Shipping Weight:

216 lbs.

2301 S. HWY 77 Pauls Valley, OK 73075
T: (405)-665-2876
sales@ddbunlimited.com www.ddbunlimited.com

UL-50 OD SERIES

OD-62DDC-UL50

An ISO 9001 Certified company

Made in America

Believing in American Craftsmanship

15 YEAR WARRANTY



Features

1. Alumishield Solar Cap
2. 19” Adjustable Racking Rails
3. Stainless Steel Door Hinge
4. Door Grounding Strap
5. 3-Point Locking System
6. 0.125" Aluminum Construction
7. Rear Door Access
8. Powder Coat Finish

Scan this code for Climate Control

Scan this code for Accessories

2301 S. HWY 77 Pauls Valley, OK 73075
T: (405)-665-2876
sales@ddbunlimited.com www.ddbunlimited.com

REVISIONS		
REV.	DESCRIPTION	DATE
A	CREATED WEBSITE DRAWING FOR OD-62DD-UL50 PER DR-01853	10/5/2018
B	UPDATED SHEET FORMAT	3/30/2022

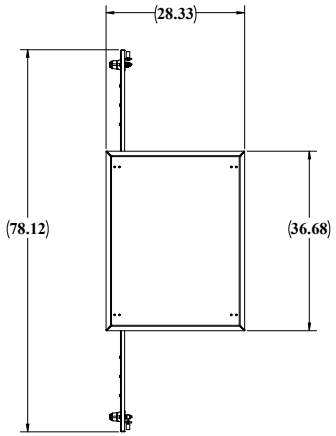

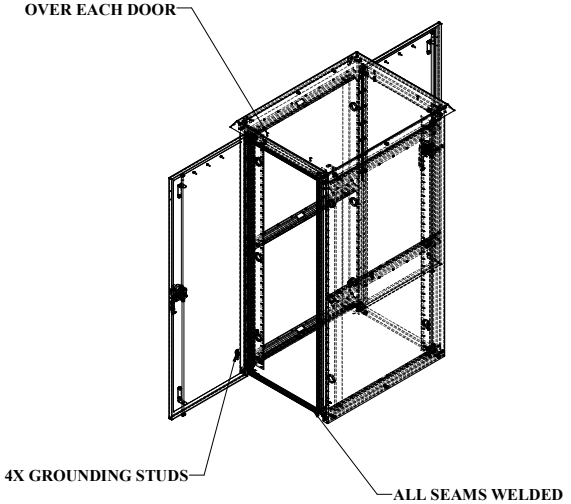

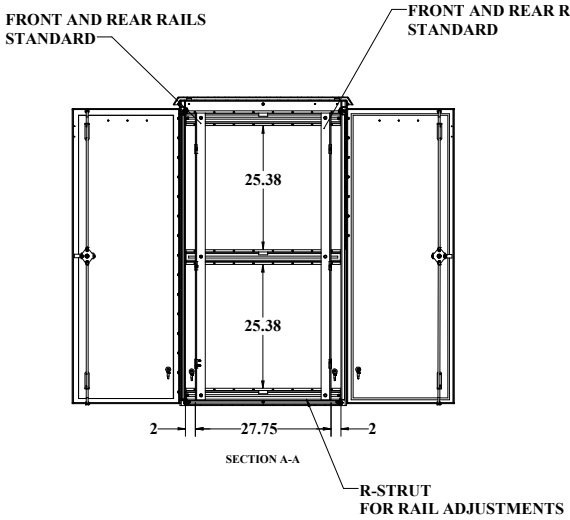

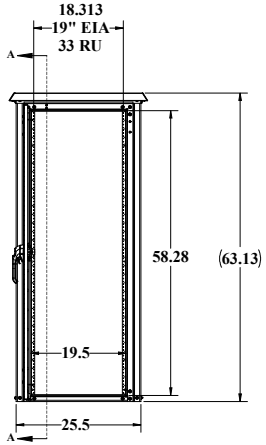

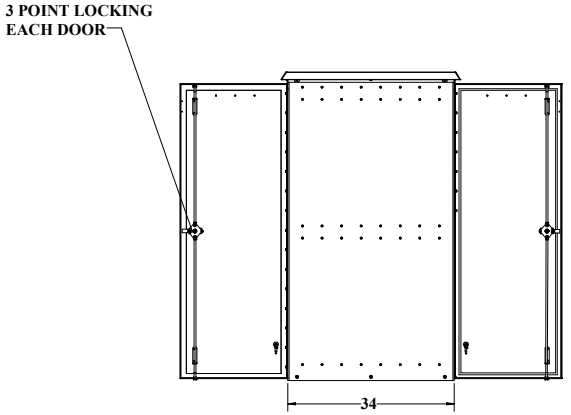

UNLESS OTHERWISE SPECIFIED:
DIMENSIONS ARE IN INCHES
ANGULAR: ±1°
FRACTIONAL/NO DECIMAL: ± 1/32
TWO PLACE DECIMAL: ± 0.010
THREE PLACE DECIMAL: ± 0.005
ALL HOLES ±0.003Ⓜ
MATERIAL: 5052-H32-0.125 ASTM B209-04
PAINT: DIAMOND VOGEL BRIDE GLOSS 50X999 BT-8320
DO NOT SCALE DRAWING

DDB Unlimited Inc.
OD-62DD-UL50

SIZE	Cage Code:	DWG. NO.:	REV
D	385Y5	01853	B

SCALE: 1:12 | WEIGHT: 168 lbs. | SHEET 1 OF 3

09/19/24

UNCLASSIFIED PUBLIC

File Location: (DDB)(EPDM Vault:)
C:\DDB\DR Requests\Customers\DDB WEB DWG\OD Family-UL50 WEB\OD-62DD-UL50 WEB\

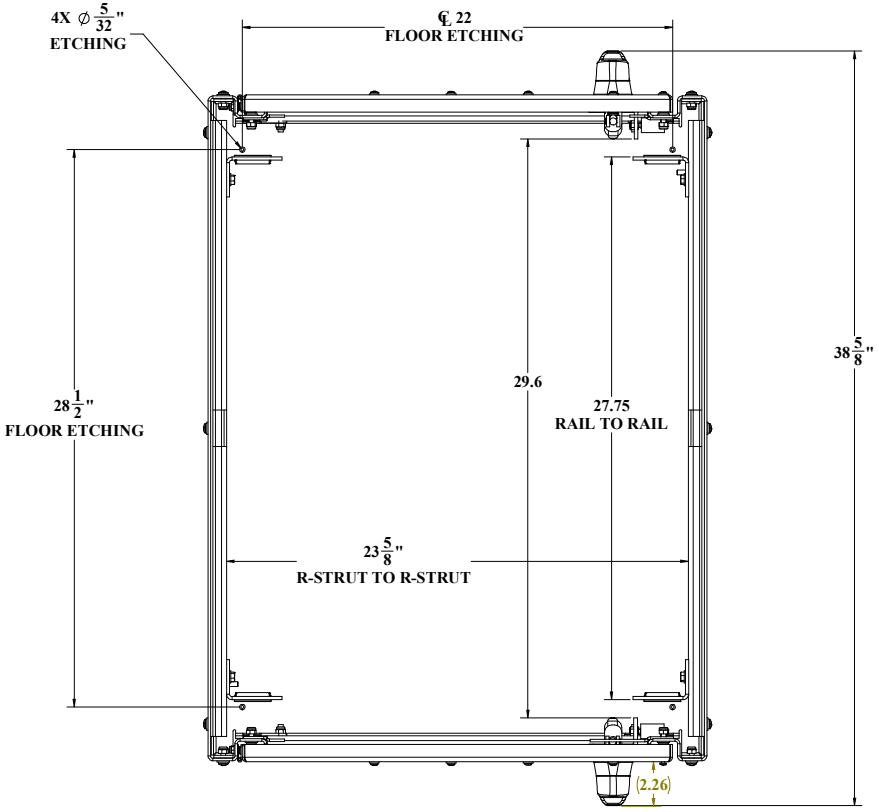

TOP VIEW CEILING AND ALUMASHIELD NOT SHOWN

UNLESS OTHERWISE SPECIFIED: DIMENSIONS ARE IN INCHES. ANGULAR: ±1°. FRACTIONAL/NO DECIMAL: ±1/32. TWO PLACE DECIMAL: ±0.030. THREE PLACE DECIMAL: ±0.010. ALL HOLES ±0.005Ⓜ	DDB Unlimited Inc. OD-DD-Closed		
	SIZE: D	Cage Code: 385Y5	DWG. NO.: 01853 REV: B
MATERIAL: 5052-H32-0.125 ASTM B209-04	SCALE: 1:12	WEIGHT: 104 lbs.	SHEET 2 OF 3
PAINT: DIAMOND VOGEL BRIDE GLOSS 1K/WHT #1-8320			
DO NOT SCALE DRAWING			

09/19/24

UNCLASSIFIED PUBLIC

File Location: (DDB)(EPDM Vault:)
C:\DDB\DR Requests\Customers\DDB WEB DWG\OD Family-UL50 WEB\OD-62DD-UL50 WEB\

DOOR GASKET HIDDEN

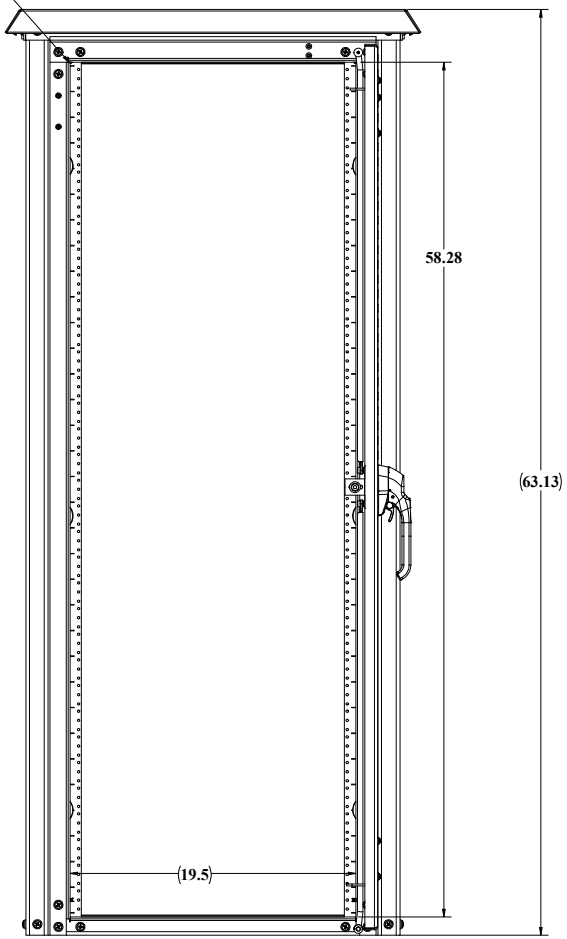

BACK VIEW

UNLESS OTHERWISE SPECIFIED:	DDB Unlimited Inc.			
DIMENSIONS ARE IN INCHES ANGULAR: ±1° FRACTIONAL/NO DECIMAL: ± 1/32 TWO PLACE DECIMAL: ± 0.010 THREE PLACE DECIMAL: ± 0.005 ALL HOLES ±0.005Ⓜ	OD-62DD-UL50			
	SIZE	Cage Code:	DWG. NO.:	REV
	D	385Y5	01853	B
MATERIAL: 5052-H32-0.125 ASTM B209-04	SCALE: 1:12	WEIGHT: 168 lbs.		SHEET 3 OF 3
PAINT: DIAMOND VOGEL BRIDE GLOSS 1K/WHT #1-8220				
DO NOT SCALE DRAWING				

09/19/24

UNCLASSIFIED PUBLIC

File Location: (DDB)(EPDM Vault:)
C:\DDB\DR Requests\Customers\DDB WEB DWG\OD Family-UL50 WEB\OD-62DD-UL50 WEB\

An ISO 9001 Certified company

UL-50 OD SERIES

OD-62DDXC-UL50

Made in America

Believing in American Craftsmanship

15 YEAR WARRANTY

Why Choose the OD-UL Series?



The OD-62DDXC-UL50 enclosures are the ultimate choice for your outdoor racking requirements. Being made of our own rugged Alumiflex®, you'll find it noticeably lighter than steel, yet strong enough to rack even the heaviest equipment. When choosing the OD-UL series, you have handpicked the highest value in American construction. The OD-UL series includes the standard features you have come to expect with DDB, incorporating the versatile R-strut system for adjustable racking, the security of a 3- point locking system, our patented Alumishield® solar cap to manage heat loads, door grounding strap, & UL listed gasketing. For those who need more than just our standard enclosure, DDB can also make a truly customized solution with our many available options including HVAC, providing a climate-controlled environment for any electronic equipment, electrical load panels and cable entry solutions to name a few. All of this comes together to create an enclosure able to meet all of the unique needs your customers have been seeking. DDB offers a state-of-the-art design, a competitive price, benchmark lead times and a guaranteed delivery, all backed up with an industry leading 15-year warranty on every enclosure. Put DDB's substantial stock to work for you today. Contact our professional staff to assist you with your made-to-order solution.

Features

15 Year Warranty

0.125" Aluminum Construction

Welded Construction

3-Point Locking System

Front and Rear Access

Stainless Steel External Hardware/Hinge

Custom Colors Available

Water/Rain/Sleet/Dust Tight

Flexible and Scalable

Quick Shipping

Application Types

Telecommunications
Wireless/Broadband
Fiber Optics
Back Haul
Base Station
Small Cell/ DAS
Utility
Public Safety
Military
Trailer-Based Communications
Wi-Fi
Flexible and Scalable
LTEE/4G/5G
Intelligent Traffic



Environmental & Safety Ratings:

- ✓ ETL environmentally listed to UL 50/50E, IP 66, Type 4
- ✓ ETL listed; Safety Requirements, UL 62368-1:2019 Ed.3, CSA C22.2

Weight and Dimensions

Approximate Exterior Enclosure Dimensions:

64”H x 29”W x 47”D

Shipping Dimensions:

52”D x 32”W x 72"H- Palletized

Approximate Shipping Weight:

241 lbs.

2301 S. HWY 77 Pauls Valley, OK 73075
T: (405)-665-2876
sales@ddbunlimited.com www.ddbunlimited.com

An ISO 9001 Certified company

UL-50 OD SERIES

OD-62DDXC-UL50

Made in America

Believing in American Craftsmanship

15 YEAR WARRANTY



Features

1. Alumishield Solar Cap
2. 19” Adjustable Racking Rails
3. Stainless Steel Door Hinge
4. Door Grounding Strap
5. 3-Point Locking System
6. 0.125" Aluminum Construction
7. Rear Door Access
8. Powder Coat Finish

Scan this code for Climate Control

Scan this code for Accessories

2301 S. HWY 77 Pauls Valley, OK 73075
T: (405)-665-2876
sales@ddbunlimited.com www.ddbunlimited.com

REVISIONS		
REV.	DESCRIPTION	DATE
A	CREATED WEBSITE DRAWING FOR OD-62DDX-UL50 PER DR-01854	10/5/2018
B	UPDATED SHEET FORMAT	4/15/2022

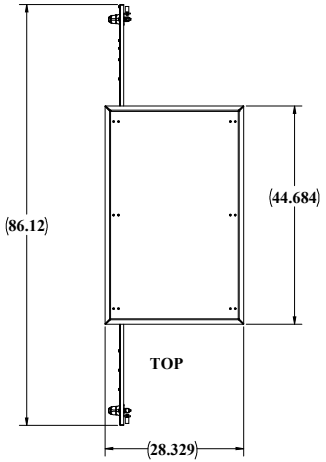

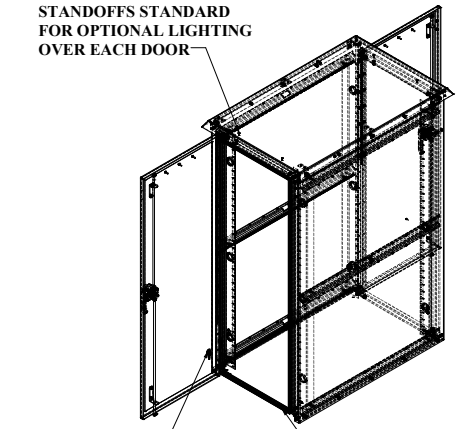

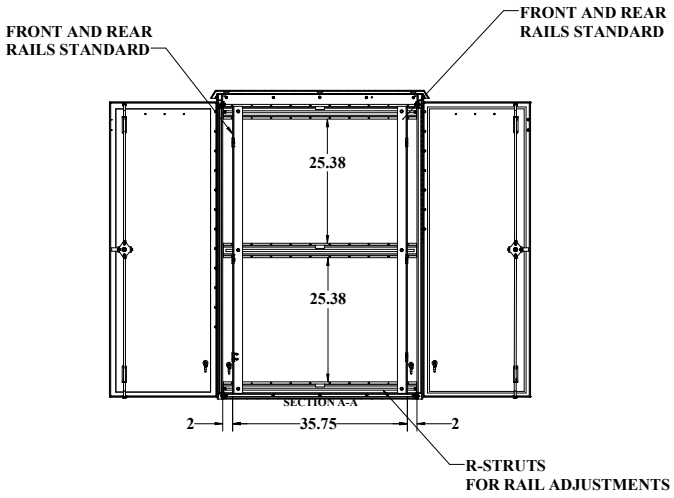

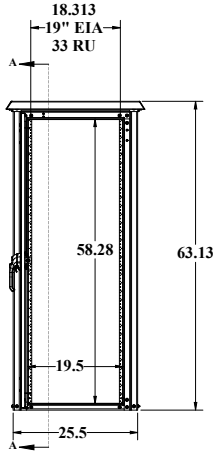

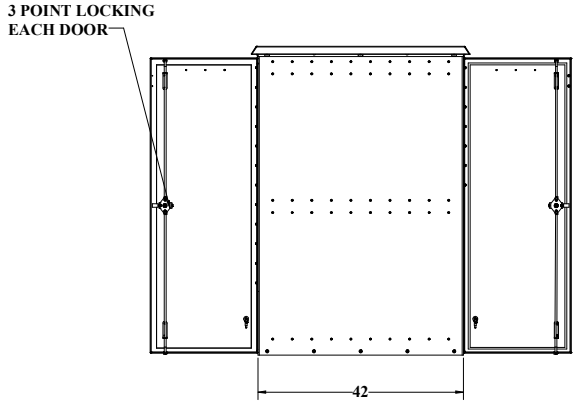

UNLESS OTHERWISE SPECIFIED:	DDB Unlimited Inc.			
DIMENSIONS ARE IN INCHES	OD-62DDX-UL50			
ANGULAR: ±1° FRACTIONAL/NO DECIMAL: ± 1/32 TWO PLACE DECIMAL: ± 0.010 THREE PLACE DECIMAL: ± 0.005	SIZE	Cage Code:	DWG. NO.:	REV
ALL HOLES ⌀0.005Ⓜ	D	385Y5	01854	B
MATERIAL: 5052-H32-0.125 ASTM B209-04	SCALE: 1:12	WEIGHT: 190 lbs.		SHEET 1 OF 3
PAINT: DIAMOND VOGEL BRIDE GLOSS 90X999 BT-8320				
DO NOT SCALE DRAWING				

09/19/24

UNCLASSIFIED PUBLIC

File Location: (DDB)(EPDM Vault:)
C:\DDB\DR Requests\Customers\DDB WEB DWG\OD Family-UL50 WEB\OD-62DDX-UL50 WEB\

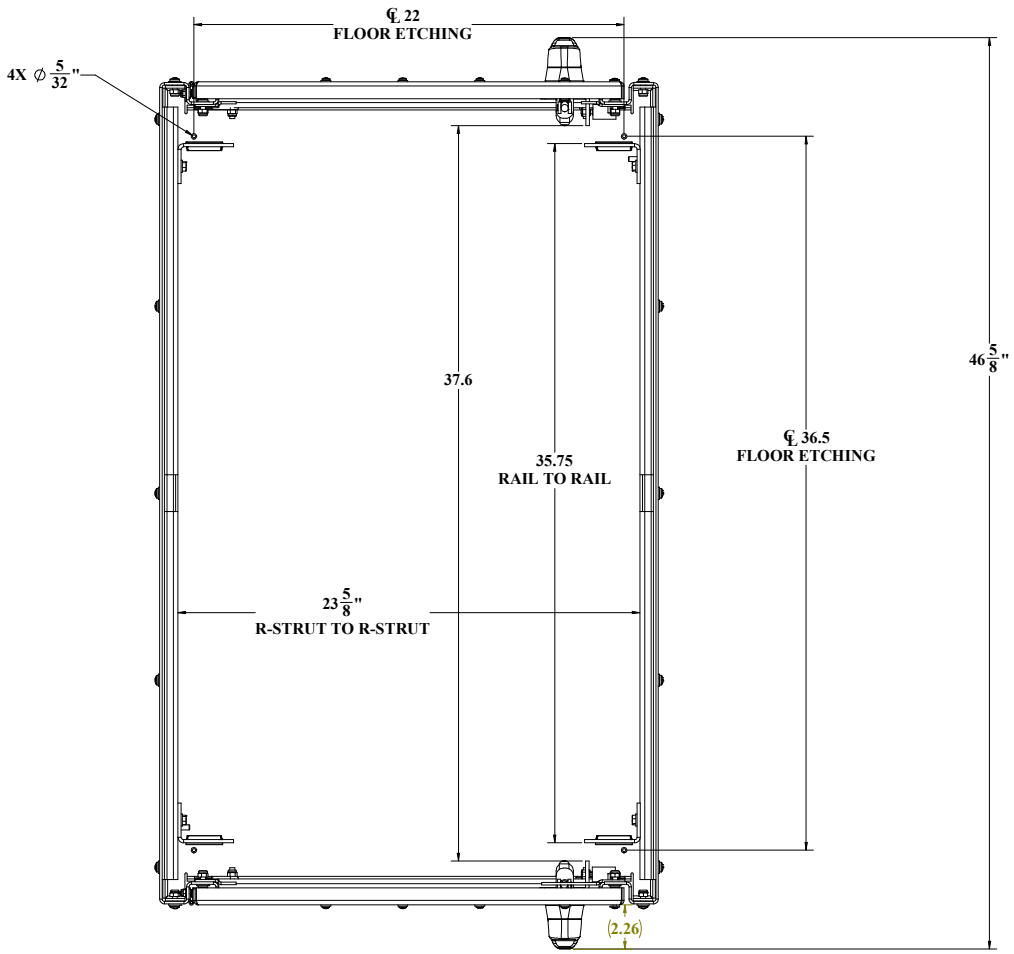

TOP VIEW CEILING AND ALUMASHIELD NOT SHOWN

UNLESS OTHERWISE SPECIFIED:	DDB Unlimited Inc.			
DIMENSIONS ARE IN INCHES ANGULAR: ±1° FRACTIONAL/NO DECIMAL: ±1/64 TWO PLACE DECIMAL: ±0.020 THREE PLACE DECIMAL: ±0.010 ALL HOLES ±0.005Ø	OD-DDX-Closed			
	SIZE	Cage Code:	DWG. NO.:	REV
	D	385Y5	01854	B
MATERIAL: 5052-H32-0.125 ASTM B209-04	SCALE: 1:12	WEIGHT: 120 lbs.		SHEET 2 OF 3
PAINT: DIAMOND VOGEL BRIDE GLOSS 70XW99 BT-8320				
DO NOT SCALE DRAWING				

09/19/24

UNCLASSIFIED PUBLIC

File Location: (DDB)(EPDM Vault:)
C:\DDB\DR Requests\Customers\DDB WEB DWG\OD Family-UL50 WEB\OD-62DDX-UL50 WEB\

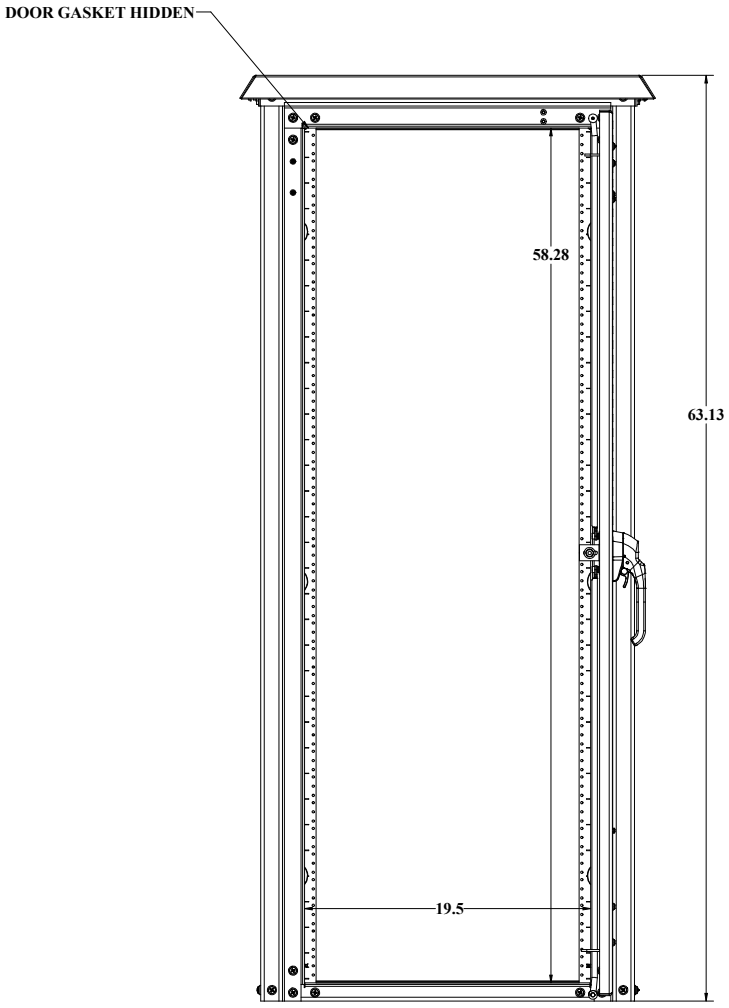

REAR VIEW

UNLESS OTHERWISE SPECIFIED:	DDB Unlimited Inc.			
DIMENSIONS ARE IN INCHES ANGULAR: ±1° FRACTIONAL/NO DECIMAL: ±1/32 TWO PLACE DECIMAL: ± 0.030 THREE PLACE DECIMAL: ± 0.010 ALL HOLES ±0.005Ø	OD-62DDX-UL50			
	SIZE	Cage Code:	DWG. NO.:	REV
	D	385Y5	01854	B
MATERIAL: 5052-H32-0.125 ASTM B209-04	SCALE: 1:12	WEIGHT: 190 lbs.		SHEET 3 OF 3
PAINT: DIAMOND VOGEL BRIDE GLOSS 70X9WE 81-8320				
DO NOT SCALE DRAWING				

09/19/24

UNCLASSIFIED PUBLIC

File Location: (DDB)(EPDM Vault:)
C:\DDB\DR Requests\Customers\DDB WEB DWG\OD Family-UL50 WEB\OD-62DDX-UL50 WEB\

UL-50 OD SERIES

OD-78DXC-UL50

An ISO 9001 Certified company

Made in America

Believing in American Craftsmanship

15 YEAR WARRANTY

Why Choose the OD-UL Series?



The OD-78DXC-UL50 enclosures are the ultimate choice for your outdoor racking requirements. Being made of our own rugged Alumiflex®, you'll find it noticeably lighter than steel, yet strong enough to rack even the heaviest equipment. When choosing the OD-UL series, you have handpicked the highest value in American construction. The OD-UL series includes the standard features you have come to expect with DDB, incorporating the versatile R-strut system for adjustable racking, the security of a 3- point locking system, our patented Alumishield® solar cap to manage heat loads, door grounding strap, & UL listed gasketing. For those who need more than just our standard enclosure, DDB can also make a truly customized solution with our many available options including HVAC, providing a climate-controlled environment for any electronic equipment, electrical load panels and cable entry solutions to name a few. All of this comes together to create an enclosure able to meet all of the unique needs your customers have been seeking. DDB offers a state-of-the-art design, a competitive price, benchmark lead times and a guaranteed delivery, all backed up with an industry leading 15-year warranty on every enclosure. Put DDB's substantial stock to work for you today. Contact our professional staff to assist you with your made-to-order solution.

Application Types

Telecommunications
Wireless/Broadband
Fiber Optics
Back Haul
Base Station
Small Cell/ DAS
Utility
Public Safety
Military
Trailer-Based Communications
Wi-Fi
Flexible and Scalable
LTEE/4G/5G
Intelligent Traffic



Environmental & Safety Ratings:

- ✓ ETL environmentally listed to UL 50/50E, IP 66, Type 4
- ✓ ETL listed; Safety Requirements, UL 62368-1:2019 Ed.3, CSA C22.2

Features

15 Year Warranty
0.125" Aluminum Construction
Welded Construction
3-Point Locking System
Front and Rear Access
Stainless Steel External Hardware/Hinge
Custom Colors Available
Water/Rain/Sleet/Dust Tight
Flexible and Scalable
Quick Shipping

Weight and Dimensions

Approximate Exterior Enclosure Dimensions:
79”H x 29”W x 30”D
Shipping Dimensions:
42”D x 32”W x 84”H- Palletized
Approximate Shipping Weight:
208 lbs.

2301 S. HWY 77 Pauls Valley, OK 73075
T: (405)-665-2876
sales@ddbunlimited.com www.ddbunlimited.com

UL-50 OD SERIES

OD-78DXC-UL50

An ISO 9001 Certified company

Made in America

Believing in American Craftsmanship

15 YEAR WARRANTY

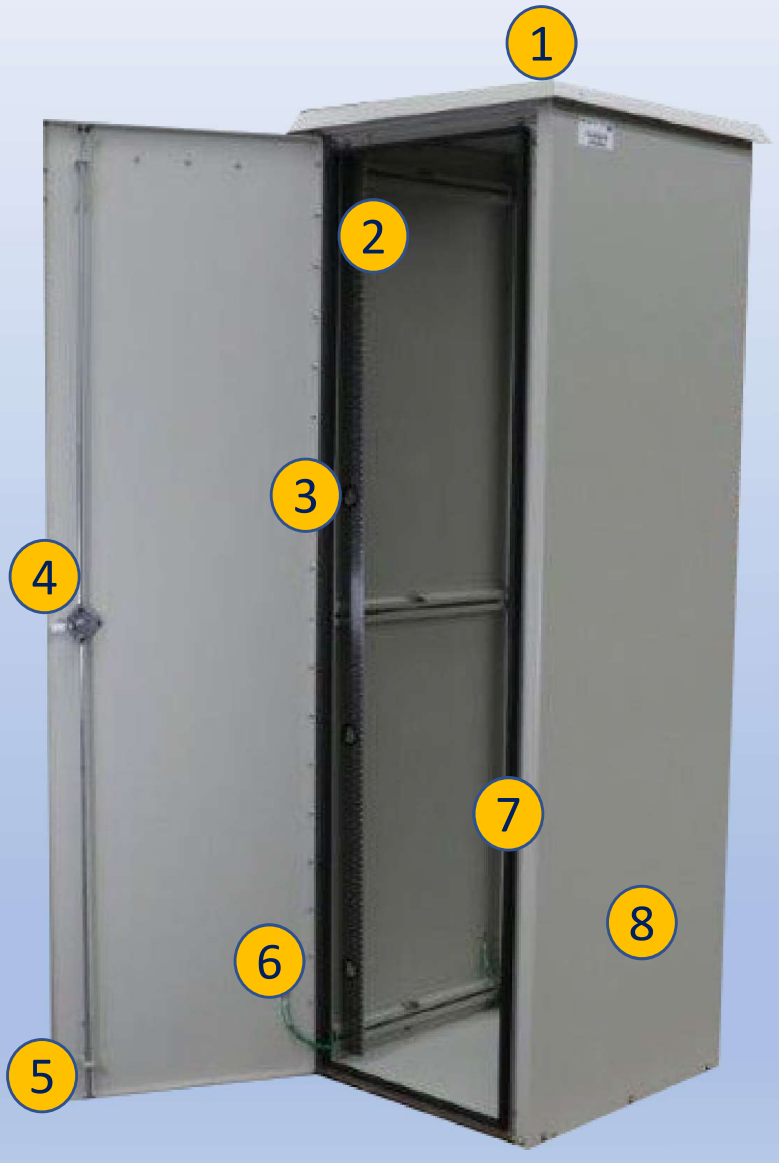

Features

1. Alumishield Solar Cap
2. 19” Adjustable Racking Rails
3. Stainless Steel Door Hinge
4. 3-Point Locking System
5. 0.125" Aluminum Construction
6. Door Grounding Strap
7. Rear Door Access
8. Powder Coat Finish

Scan this code for Climate Control

Scan this code for Accessories

2301 S. HWY 77 Pauls Valley, OK 73075
T: (405)-665-2876
sales@ddbunlimited.com www.ddbunlimited.com

REVISIONS		
REV.	DESCRIPTION	DATE
A	CREATED WEBSITE DRAWING FOR OD-78DX-UL50 PER DR-01858	10/8/2018
B	UPDATED SHEET FORMAT	4/15/2022

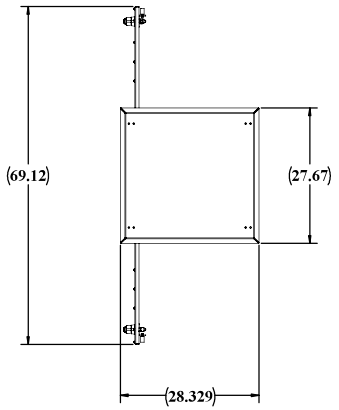

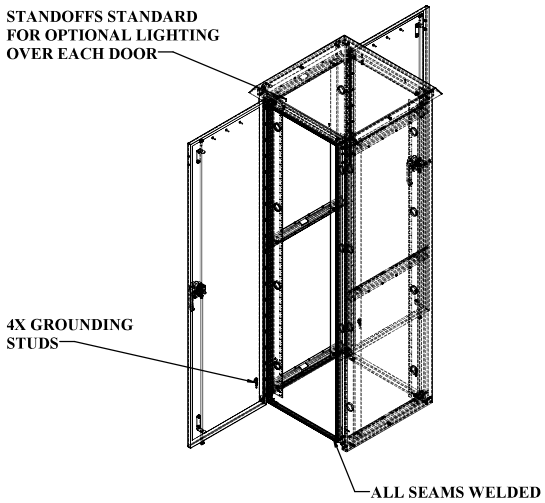

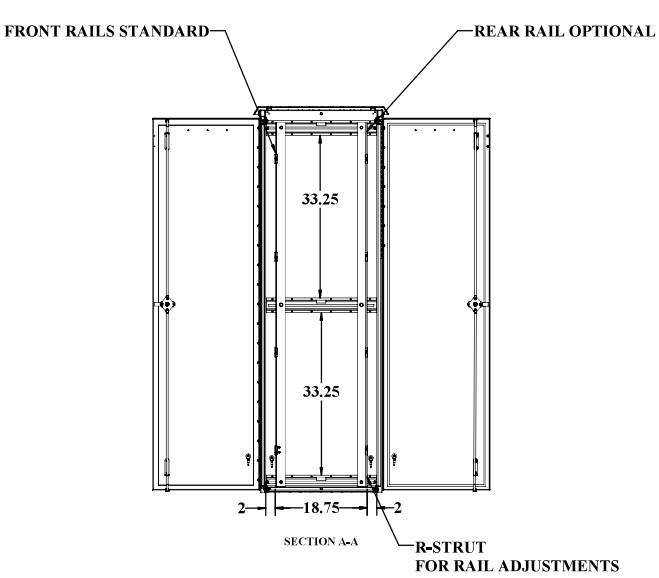

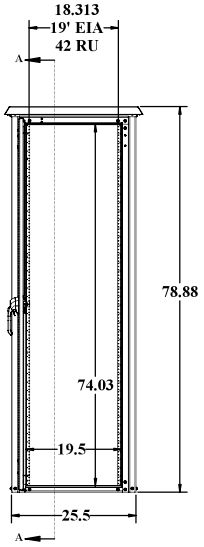

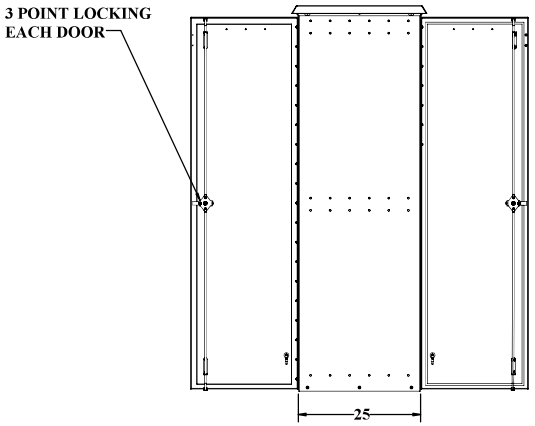

UNLESS OTHERWISE SPECIFIED:	DDB Unlimited Inc.			
DIMENSIONS ARE IN INCHES ANGULAR: ±1° FRACTIONAL: ±1/64 TWO PLACE DECIMAL: ±.010 THREE PLACE DECIMAL: ±.005 ALL HOLES ⌀	OD-78DX-UL50 Enclosure, OD, 78, DX, UL50OD-78DX-UL50			
	SIZE	Cage Code:	DWG. NO.:	REV
	D	3S5Y5	01858	B
MATERIAL: Material - not specified -	SCALE: 1:12	WEIGHT: 170 lbs.		SHEET 1 OF 3
PAINT:				
DO NOT SCALE DRAWING				

TDDB-FORM-7.1-REV.K 08/03/17

UNCLASSIFIED PUBLIC

File Location: (DDB)(EPDM Vault)
C:\DDB\DR Requests\Customers\DDB WEB DWG\OD Family-UL50 WEB\OD-78DX-UL50 WEB\

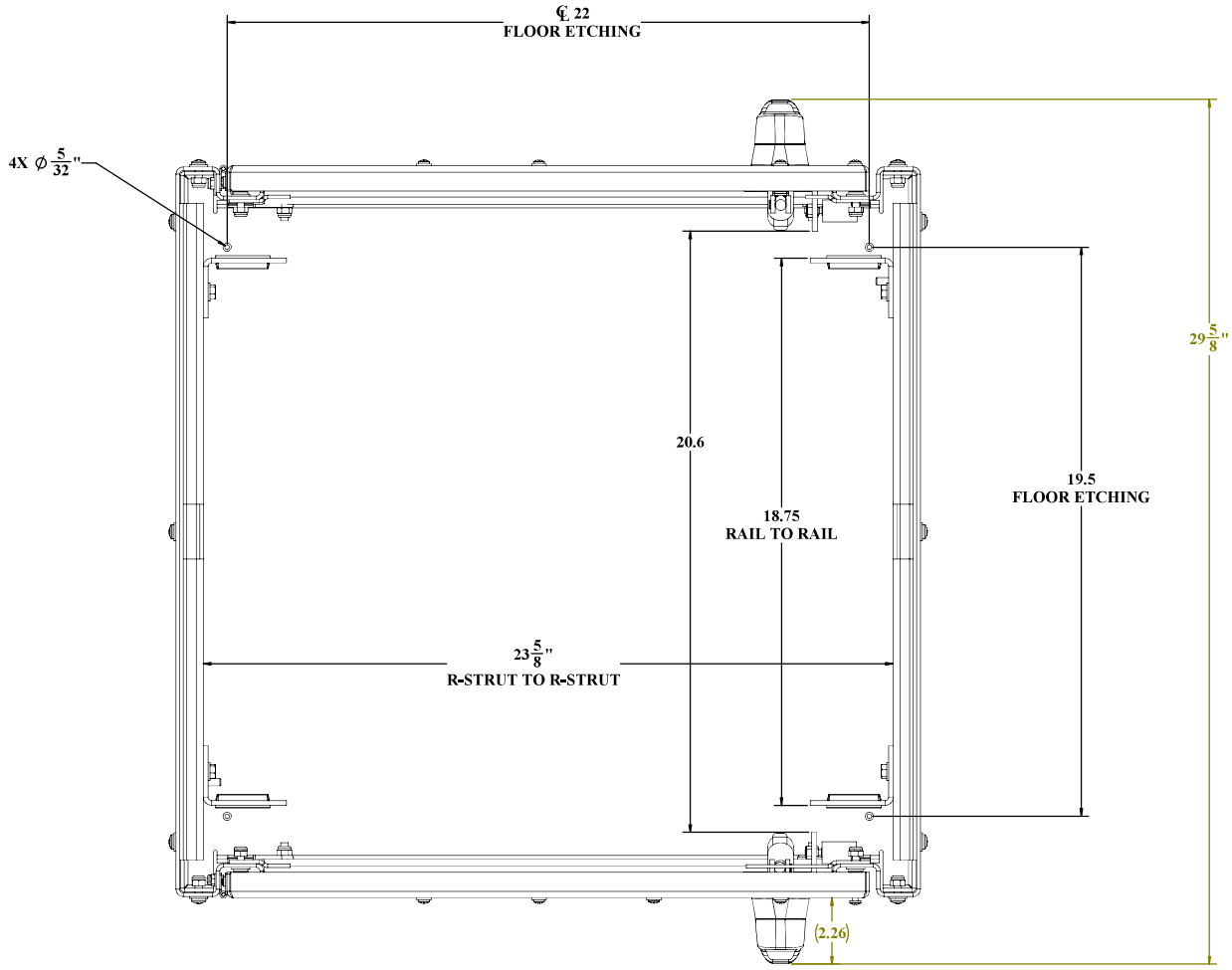

TOP VIEW CEILING AND ALUMASHIELD NOT SHOWN

UNLESS OTHERWISE SPECIFIED:	DDB Unlimited Inc.		
DIMENSIONS ARE IN INCHES ANGULAR: ±1° FRACTIONAL: ±1/64 TWO PLACE DECIMAL: ±.010 THREE PLACE DECIMAL: ±.005 ALL EDGES ⌀125	OD-DX-Closed Enclosure, OD, DX, UL50, Closed		
	SIZE: D	Cage Code: 385Y5	DWG. NO.: 01858 REV: B
MATERIAL: 16GA HRPO, A653 SQ GR 50 CLASS 1 G90	SCALE: 1:12	WEIGHT: 87 lbs.	SHEET 2 OF 3
PAINT: SHERWIN WILLIAMS, POWDURA, MEDIUM BRONZE, GLOSS, TEXTURE, 2 MILS	DO NOT SCALE DRAWING		

DDB FORM 7.1-REV.K 08/03/17

UNCLASSIFIED PUBLIC

DOOR GASKET HIDDEN

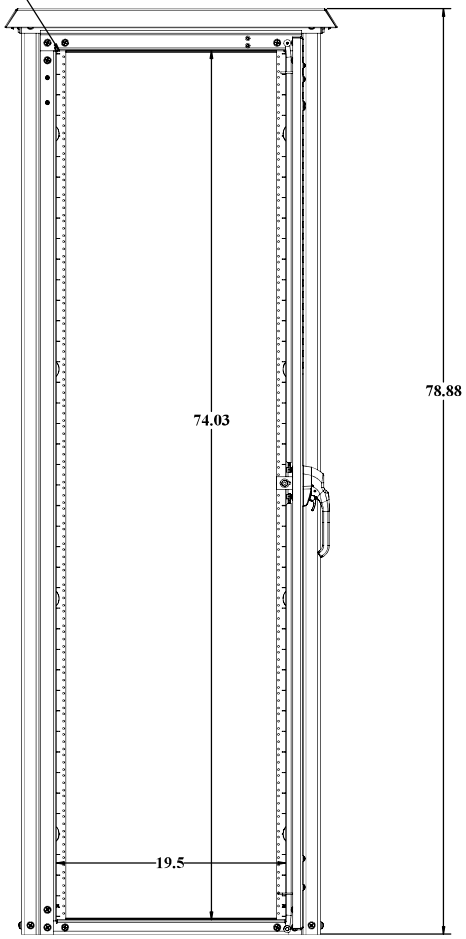

BACK VIEW

UNLESS OTHERWISE SPECIFIED:	DDB Unlimited Inc.			
DIMENSIONS ARE IN INCHES ANGULAR: FRACTIONAL±1/64 DECIMAL: ±1/128 TWO PLACE DECIMAL: ±.010 THREE PLACE DECIMAL: ±.005 ALL EDGES ▲ MICRO ◆	OD-78DX-UL50 Enclosure, OD, 78, DX, UL50			
	SIZE	Cage Code:	DWG. NO.:	REV
	D	3S5Y5	01858	B
MATERIAL: 5052-H32-0.125-ASTM-B209-04	SCALE: 1:12	WEIGHT: 170 lbs.		SHEET 3 OF 3
PAINT: SMOOTH WRINKLE GLOSS TEXTURE 15-9059				
DO NOT SCALE DRAWING				

UNCLASSIFIED PUBLIC

DDB FORM 7.1-REV K 08/03/17

UL-50 OD SERIES

OD-78DDC-UL50

An ISO 9001 Certified company

Made in America

Believing in American Craftsmanship

15 YEAR WARRANTY

Why Choose the OD-UL Series?



The OD-78DDC-UL50 enclosures are the ultimate choice for your outdoor racking requirements. Being made of our own rugged Alumiflex®, you'll find it noticeably lighter than steel, yet strong enough to rack even the heaviest equipment. When choosing the OD-UL series, you have handpicked the highest value in American construction. The OD-UL series includes the standard features you have come to expect with DDB, incorporating the versatile R-strut system for adjustable racking, the security of a 3- point locking system, our patented Alumishield® solar cap to manage heat loads, door grounding strap, & UL listed gasketing. For those who need more than just our standard enclosure, DDB can also make a truly customized solution with our many available options including HVAC, providing a climate-controlled environment for any electronic equipment, electrical load panels and cable entry solutions to name a few. All of this comes together to create an enclosure able to meet all of the unique needs your customers have been seeking. DDB offers a state-of-the-art design, a competitive price, benchmark lead times and a guaranteed delivery, all backed up with an industry leading 15-year warranty on every enclosure. Put DDB's substantial stock to work for you today. Contact our professional staff to assist you with your made-to-order solution.

Application Types

Telecommunications
Wireless/Broadband
Fiber Optics
Back Haul
Base Station
Small Cell/ DAS
Utility
Public Safety
Military
Trailer-Based Communications
Wi-Fi
Flexible and Scalable
LTEE/4G/5G
Intelligent Traffic



Environmental & Safety Ratings:

- ✓ ETL environmentally listed to UL 50/50E, IP 66, Type 4
- ✓ ETL listed; Safety Requirements, UL 62368-1:2019 Ed.3, CSA C22.2

Features

15 Year Warranty
0.125" Aluminum Construction
Welded Construction
3-Point Locking System
Front and Rear Access
Stainless Steel External Hardware/Hinge
Custom Colors Available
Water/Rain/Sleet/Dust Tight
Flexible and Scalable
Quick Shipping

Weight and Dimensions

Approximate Exterior Enclosure Dimensions:
79”H x 29”W x 39”D
Shipping Dimensions:
42”D x 32”W x 84”H- Palletized
Approximate Shipping Weight:
250 lbs.

2301 S. HWY 77 Pauls Valley, OK 73075
T: (405)-665-2876
sales@ddbunlimited.com www.ddbunlimited.com

UL-50 OD SERIES

OD-78DDC-UL50

An ISO 9001 Certified company

Made in America

Believing in American Craftsmanship

15 YEAR WARRANTY



Features

1. Alumishield Solar Cap
2. 19” Adjustable Racking Rails
3. Stainless Steel Door Hinge
4. 3-Point Locking System
5. 0.125" Aluminum Construction
6. Door Grounding Strap
7. Rear Door Access
8. Powder Coat Finish

Scan this code for Climate Control

Scan this code for Accessories

2301 S. HWY 77 Pauls Valley, OK 73075
T: (405)-665-2876
sales@ddbunlimited.com www.ddbunlimited.com

REVISIONS		
REV.	DESCRIPTION	DATE
A	CREAED WEBSITE DRAWING FOR OD-78DD-UL50 PER DR-01859	10/9/2018
B	UPDATED SHEET FORMAT	4/15/2022

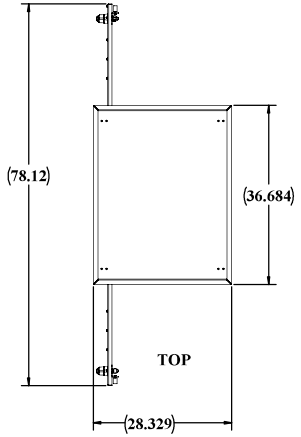

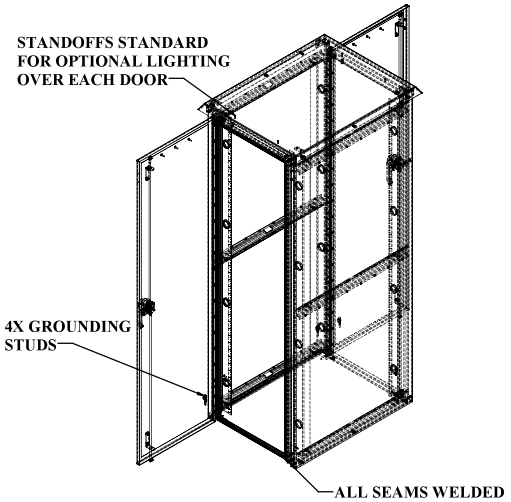

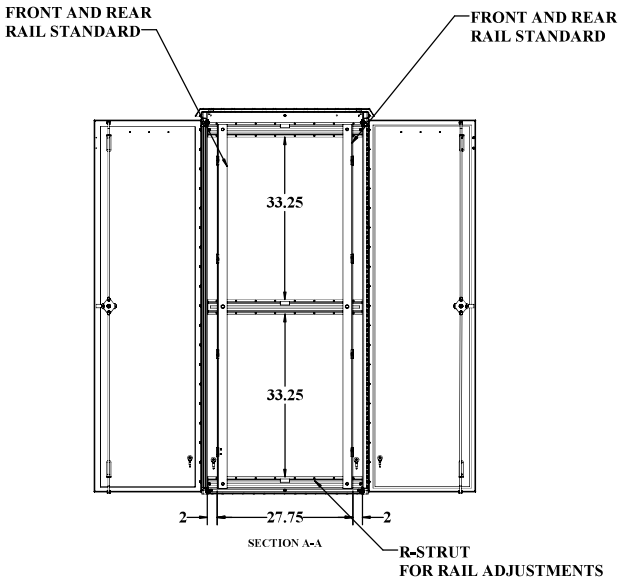

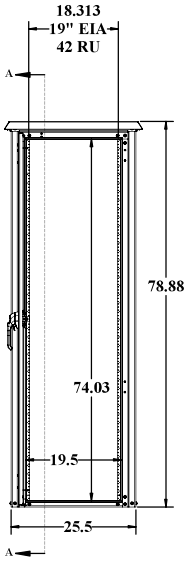

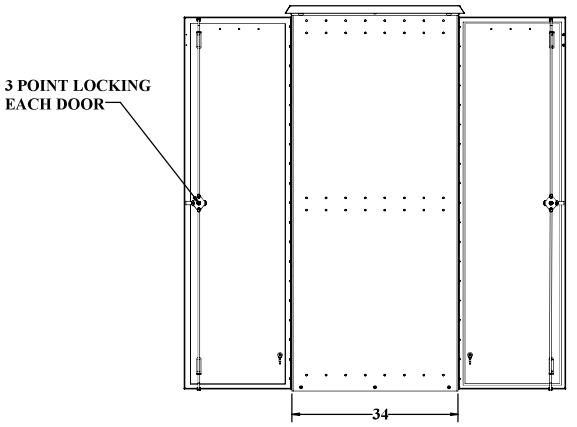

UNLESS OTHERWISE SPECIFIED:	DDB Unlimited Inc.			
DIMENSIONS ARE IN INCHES ANGULAR: FRACTIONAL ±1/64 DECIMAL: ±0.030 TWO PLACE DECIMAL: ±0.010 THREE PLACE DECIMAL: ±0.005	OD-78DD-UL50 Enclosure, OD, 78, DD, UL50OD-78DD-UL50			
	SIZE	Cage Code:	DWG. NO.:	REV
	D	3S5Y5	01859	B
MATERIAL: 5052-H32-0.125 ASTM B209-04	SCALE: 1:12	WEIGHT: 199lbs.		SHEET 1 OF 3
PAINT: DIAMOND VOGEL, BEIGE GLOSS TEXTURE 874920				
DO NOT SCALE DRAWING				

DDB-FORM-7.1-REV.K 08/03/17

UNCLASSIFIED PUBLIC

File Location: (DDB)(EPDM Vault)
C:\DDB\DR Requests\Customers\DDB WEB DWG\OD Family\UL50 WEB\OD-78DD-UL50 WEB\

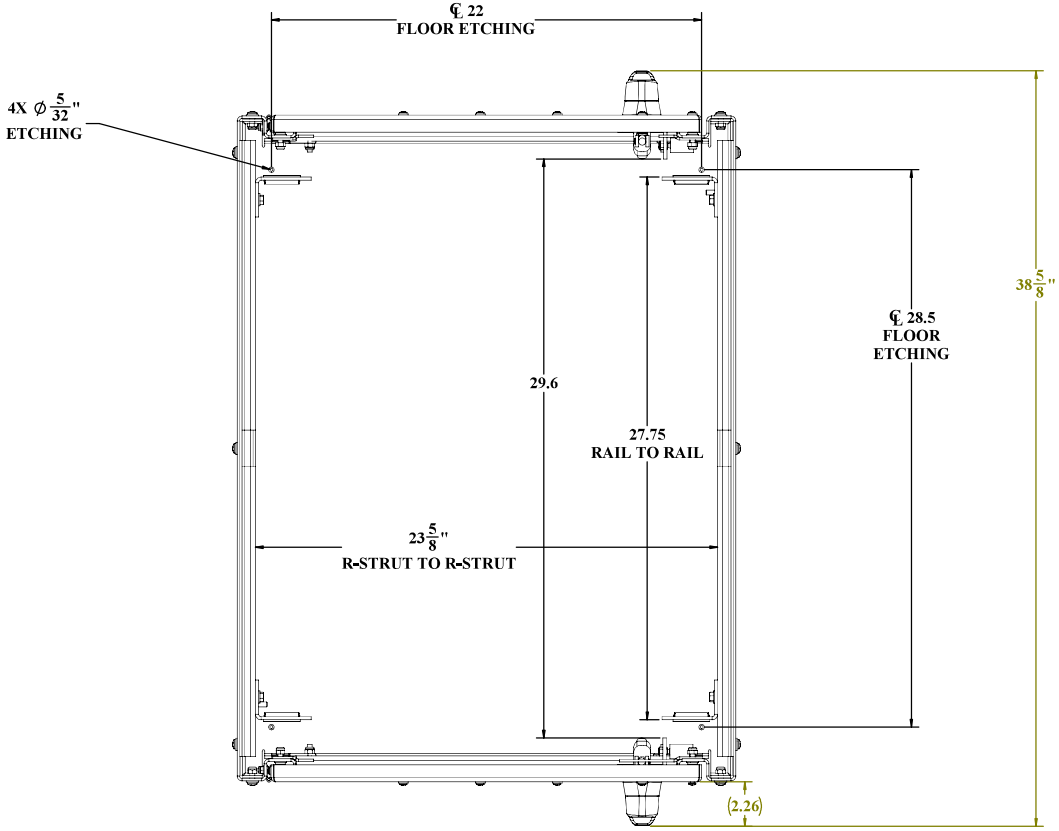

TOP VIEW CEILING AND ALUMASHIELD NOT SHOWN

UNLESS OTHERWISE SPECIFIED:	DDB Unlimited Inc.		
DIMENSIONS ARE IN INCHES ANGULAR: FRACTIONAL: TWO PLACE DECIMAL: THREE PLACE DECIMAL: ALL HOLES ⌀	OD-DD-Closed Enclosure, OD, DD, UL50 ClosedOD-DD-Closed		
	SIZE: D	Cage Code: 385Y5	DWG. NO.: 01859 REV: B
MATERIAL: Material - not specified -	SCALE: 1:12	WEIGHT: 104 lbs.	SHEET 2 OF 3
PAINT:			
DO NOT SCALE DRAWING			

DDB FORM 7.1-REV.K 08/02/17

UNCLASSIFIED PUBLIC

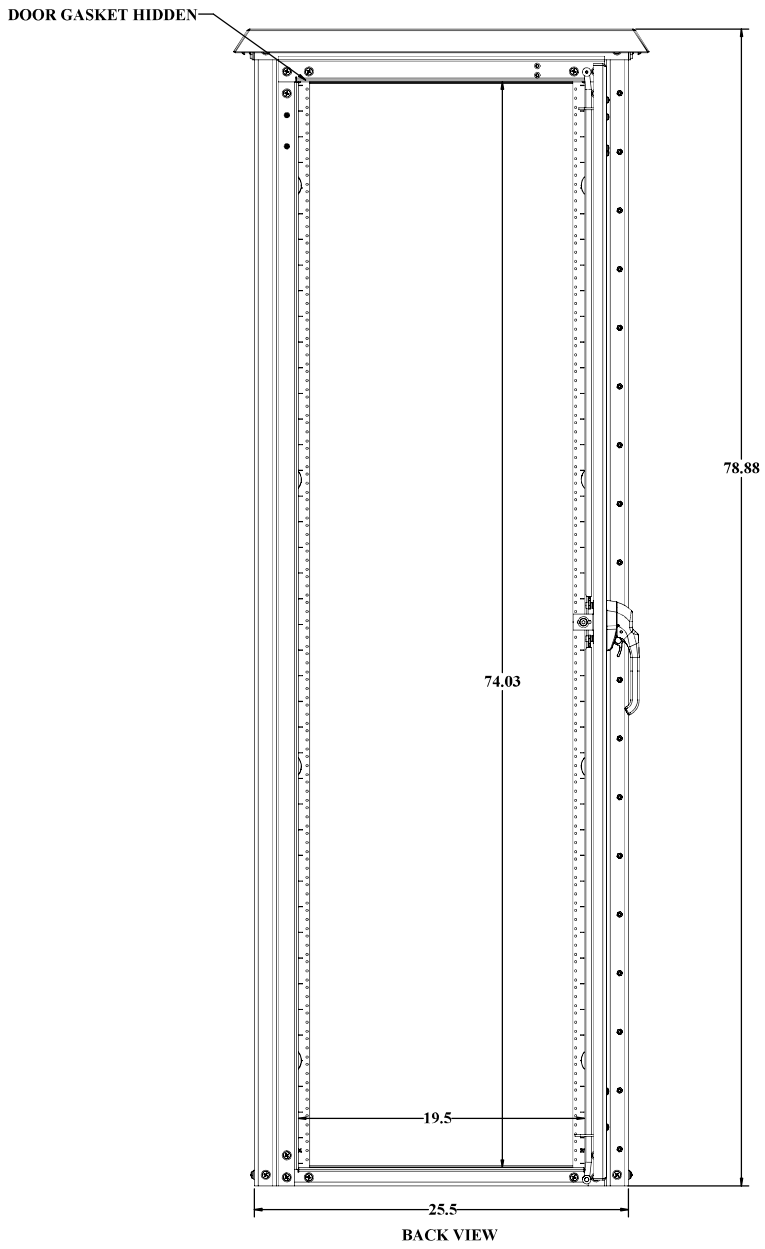

BACK VIEW

UNLESS OTHERWISE SPECIFIED: DIMENSIONS ARE IN INCHES. ANGULAR: FRACTIONAL: NO DECIMAL: TWO PLACE DECIMAL: THREE PLACE DECIMAL: ALL HOLES ⌀ unless		DDB Unlimited Inc. OD-78DD-UL50 Enclosure, OD, 78, DD, UL50OD-78DD-UL50	
	SIZE: D	Cage Code: 385Y5	DWG. NO.: 01859 REV: B
MATERIAL: -Material- not specified- PAINT:	SCALE: 1:12	WEIGHT: 199lbs.	SHEET 3 OF 3
DO NOT SCALE DRAWING			

DDB FORM 7.1-REV K 08/03/17

UNCLASSIFIED PUBLIC

File Location: (DDB) (EPDM Vault)
C:\DDB\DR Requests\Customers\DDB WEB DWG\OD Family\UL50 WEB\OD-78DD-UL50 WEB\

An ISO 9001 Certified company

UL-50 OD SERIES

OD-78DDXC-UL50

Made in America

Believing in American Craftsmanship

15 YEAR WARRANTY

Why Choose the OD-UL Series?



The OD-78DDXC-UL50 enclosures are the ultimate choice for your outdoor racking requirements. Being made of our own rugged Alumiflex®, you'll find it noticeably lighter than steel, yet strong enough to rack even the heaviest equipment. When choosing the OD-UL series, you have handpicked the highest value in American construction. The OD-UL series includes the standard features you have come to expect with DDB, incorporating the versatile R-strut system for adjustable racking, the security of a 3- point locking system, our patented Alumishield® solar cap to manage heat loads, door grounding strap, & UL listed gasketing. For those who need more than just our standard enclosure, DDB can also make a truly customized solution with our many available options including HVAC, providing a climate-controlled environment for any electronic equipment, electrical load panels and cable entry solutions to name a few. All of this comes together to create an enclosure able to meet all of the unique needs your customers have been seeking. DDB offers a state-of-the-art design, a competitive price, benchmark lead times and a guaranteed delivery, all backed up with an industry leading 15-year warranty on every enclosure. Put DDB's substantial stock to work for you today. Contact our professional staff to assist you with your made-to-order solution.

Application Types

Telecommunications
Wireless/Broadband
Fiber Optics
Back Haul
Base Station
Small Cell/ DAS
Utility
Public Safety
Military
Trailer-Based Communications
Wi-Fi
Flexible and Scalable
LTEE/4G/5G
Intelligent Traffic



Environmental & Safety Ratings:

- ✓ ETL environmentally listed to UL 50/50E, IP 66, Type 4
- ✓ ETL listed; Safety Requirements, UL 62368-1:2019 Ed.3, CSA C22.2

Features

15 Year Warranty
0.125" Aluminum Construction
Welded Construction
3-Point Locking System
Front and Rear Access
Stainless Steel External Hardware/Hinge
Custom Colors Available
Water/Rain/Sleet/Dust Tight
Flexible and Scalable
Quick Shipping

Weight and Dimensions

Approximate Exterior Enclosure Dimensions:
79”H x 29”W x 47”D
Shipping Dimensions:
52”D x 32”W x 84”H- Palletized
Approximate Shipping Weight:
268 lbs.

2301 S. HWY 77 Pauls Valley, OK 73075
T: (405)-665-2876
sales@ddbunlimited.com www.ddbunlimited.com

DDB UNLIMITED®

An ISO 9001 Certified company

UL-50 OD SERIES

OD-78DDXC-UL50

Made in America

Believing in American Craftsmanship

15 YEAR WARRANTY



Features

1. Alumishield Solar Cap
2. 19” Adjustable Racking Rails
3. Stainless Steel Door Hinge
4. 3-Point Locking System
5. 0.125" Aluminum Construction
6. Door Grounding Strap
7. Rear Door Access
8. Powder Coat Finish

Scan this code for Climate Control

Scan this code for Accessories

2301 S. HWY 77 Pauls Valley, OK 73075
T: (405)-665-2876
sales@ddbunlimited.com www.ddbunlimited.com

REVISIONS		
REV.	DESCRIPTION	DATE
A	CREATED WEBSITE DRAWING FOR OD-78DDX-U50 PER DR-01860	10/9/2018
B	UPDATED SHEET FORMAT	4/15/2022

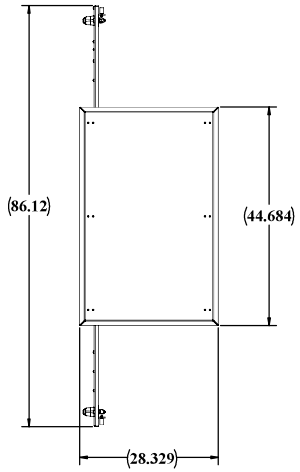

TOP

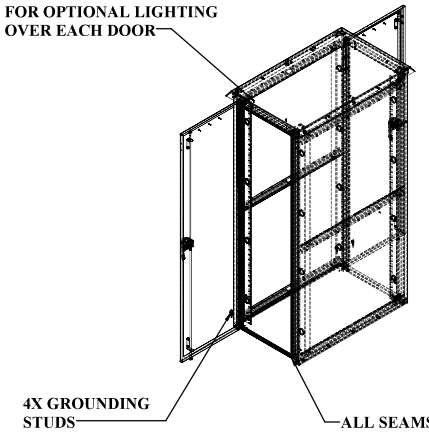

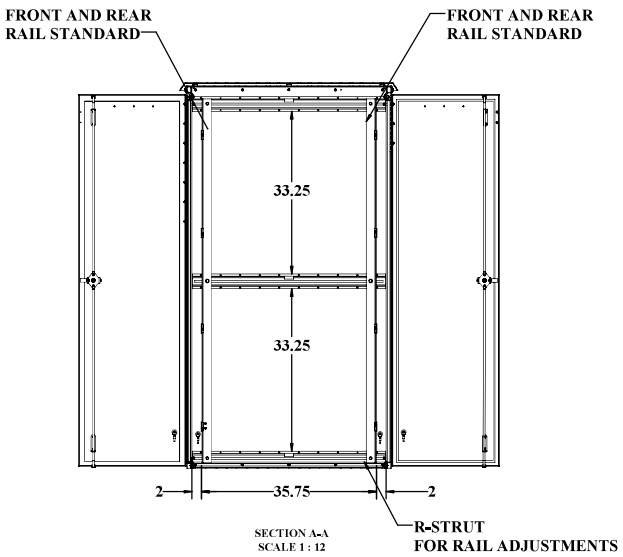

SECTION A-A
SCALE 1 : 12

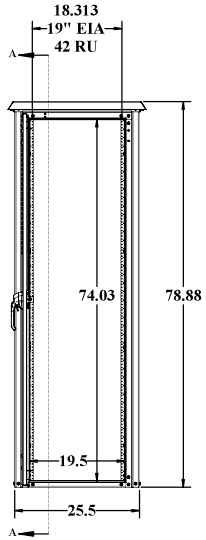

FRONT

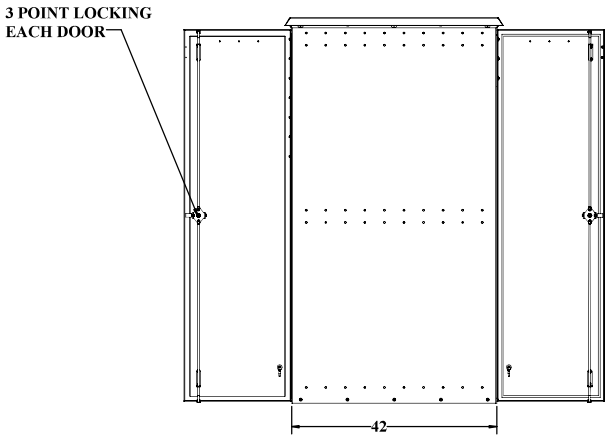

RIGHT SIDE

UNLESS OTHERWISE SPECIFIED:	DDB Unlimited Inc.			
DIMENSIONS ARE IN INCHES	OD-78DDX-UL50			
ANGULAR: FRACTIONAL ±1/64 DECIMAL: ±.010 TWO PLACE DECIMAL: ±.030 THREE PLACE DECIMAL: ±.010	Enclosure, OD, 78, DDX, UL50OD-78DDX-UL50			
ALL EDGES ARE BREAK	SIZE	Cage Code:	DWG. NO.:	REV
MATERIAL: Material - not specified -	D	3S5Y5	01860	B
PAINT:	SCALE: 1:16	WEIGHT: 225 lbs.		SHEET 1 OF 3
DO NOT SCALE DRAWING				

TDDB FORM 7.1-REV K 08/03/17

UNCLASSIFIED PUBLIC

File Location: (DDB) (EPDM Vault)
C:\DDB\DR Requests\Customers\DDB WEB DWG\OD Family-UL50 WEB\OD-78DDX-UL50 WEB\

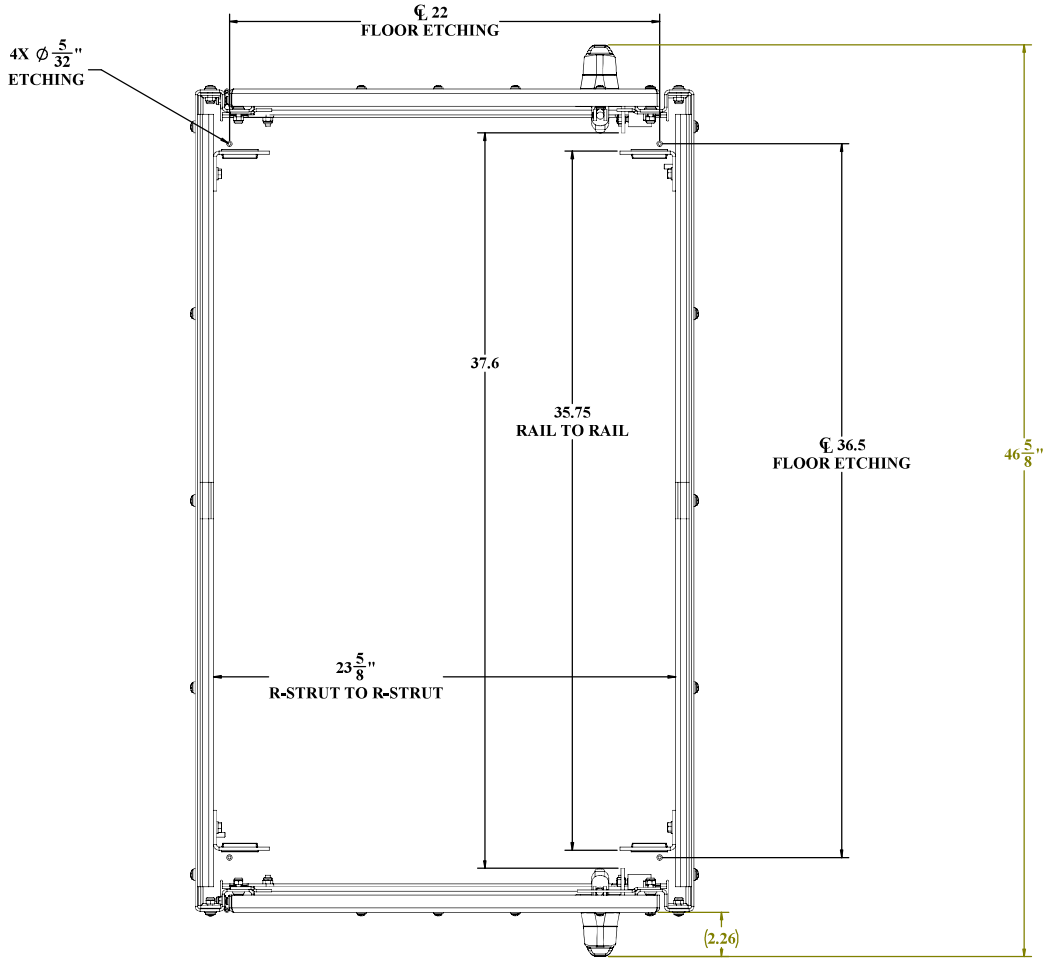

TOP VIEW CEILING AND ALUMASHIELD NOT SHOWN

UNLESS OTHERWISE SPECIFIED: DIMENSIONS ARE IN INCHES. ANGULAR: FRACTIONAL: TWO PLACE DECIMAL: THREE PLACE DECIMAL: ALL HOLES ⌀	DDB Unlimited Inc. OD-DDX-Closed Enclosure, OD, DDX, UL50, ClosedOD-DDX-Closed		
	SIZE: D	Cage Code: 385Y5	DWG. NO.: 01860 REV: B
MATERIAL: -Material - not specified- FINISH:	SCALE: 1:16	WEIGHT: 120 lbs.	SHEET 2 OF 3
DO NOT SCALE DRAWING			

DDB FORM 7.1-REV K 08/03/17

UNCLASSIFIED PUBLIC

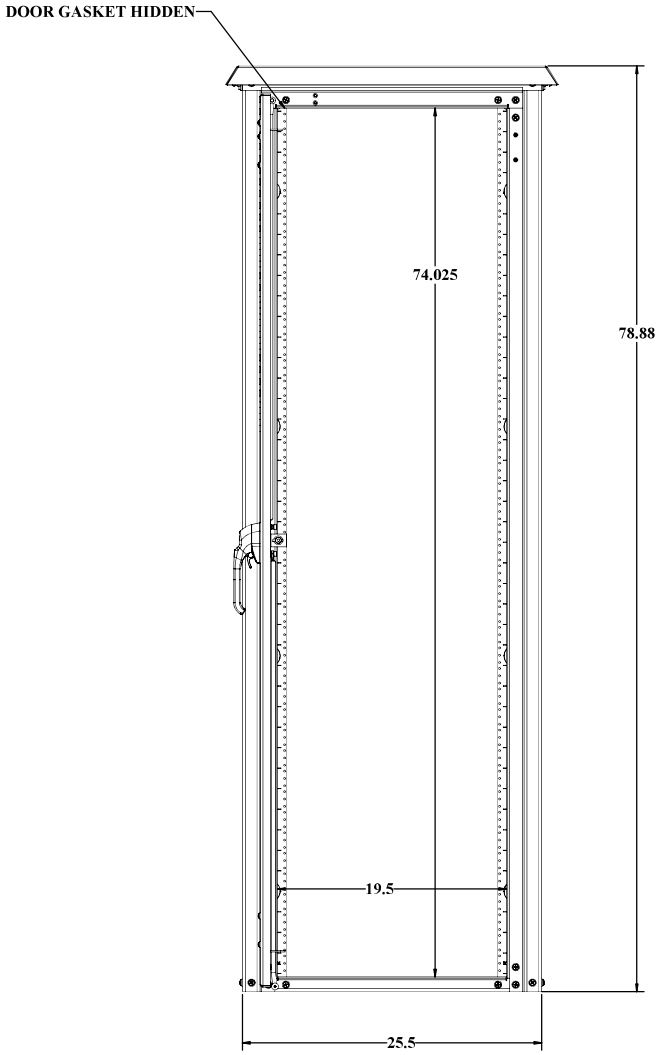

BACK VIEW

UNLESS OTHERWISE SPECIFIED:	DDB Unlimited Inc.		
DIMENSIONS ARE IN INCHES ANGULAR: FRACTIONAL: TWO PLACE DECIMAL: THREE PLACE DECIMAL: ALL HOLES ⌀ unless	OD-78DDX-UL50 Enclosure, OD, 78, DDX, UL50OD-78DDX-UL50		
	SIZE: D	Cage Code: 3S5Y5	DWG. NO.: 01860	REV: B
MATERIAL: -Material - not specified-	SCALE: 1:16	WEIGHT: 225 lbs.	SHEET 3 OF 3	
FINISH: DO NOT SCALE DRAWING				

DDB FORM 7.1-REV.K 08/03/17

UNCLASSIFIED PUBLIC

File Location: (DDB) (EPDM Vault)
C:\DDB\DR Requests\Customers\DDB WEB DWG\OD Family-UL50 WEB\OD-78DDX-UL50 WEB\

DDB UNLIMITED®

An ISO 9001 Certified company

UL-50 WOD SERIES

WOD-16DXC-UL50

Made in America

Believing in American Craftsmanship

15 YEAR WARRANTY

Why Choose the WOD-UL Series?



The WOD-16DXC-UL50 enclosure is the pinnacle of enclosures. With a fully welded chassis, heavy duty vulcanized gasketing and years of design and engineering behind it, you will find this will meet the most stringent requirements of the UL-50E Type 4 listing. Fully tested by a third party Nationally Recognized Testing Laboratory and listed to the UL-50E standard, you can trust that the WOD UL series will pass any test or inspection it faces. Designed with public safety requirements in mind, these units can be place in mission critical locations where communication or sensitive gear needs to be protected regardless of the situation. As with the standard WOD series, the WOD-UL series comes with standard 3-point locking, front and rear access with integrated wind locks, top mounted solar shield, adjustable R-strut racking, reversible 19" or 23" EIA racking, Alumiflex construction and our unmatched 15-year warranty. Moreover, there is an extensive list of optional accessories including HVAC units, electrical panels, and cable entry solutions to name a few. No matter the application, DDB provides cutting-edge design, competitive pricing, benchmark lead times, and guaranteed delivery. Whether you require a custom enclosure or something from our substantial stock, our professional staff is here to help you today.

Application Types

Telecommunications
Wireless/Broadband
Fiber Optics
Back Haul
Public Safety
DAS
Utility
Base Station
Military
Trailer-Based Communications
Wi-Fi
LTEE/4G/5G



Environmental & Safety Ratings:

- ✓ ETL environmentally listed to UL 50/50E, IP 66, Type 4
- ✓ ETL listed; Safety Requirements, UL 62368-1:2019 Ed.3, CSA C22.2

Features

15 Year Warranty
0.125" Aluminum Construction
3-Point Locking System
Heavy Duty Out-Door Construction
Front and Rear Access
Stainless Steel External Hardware/Hinge
Cream Powder-Coat, Standard
Wind Locks
Quick Shipping

Weight and Dimensions

Approximate Exterior Enclosure Dimensions:
18"H x 33"W x 30"D
Shipping Dimensions:
42"D x 32"W x 26"H- Palletized
Approximate Shipping Weight:
120 lbs.

2301 S. HWY 77 Pauls Valley, OK 73075
T: (405)-665-2876
sales@ddbunlimited.com www.ddbunlimited.com

UL-50 WOD SERIES

WOD-16DXC-UL50

An ISO 9001 Certified company

Made in America

Believing in American Craftsmanship

15 YEAR WARRANTY

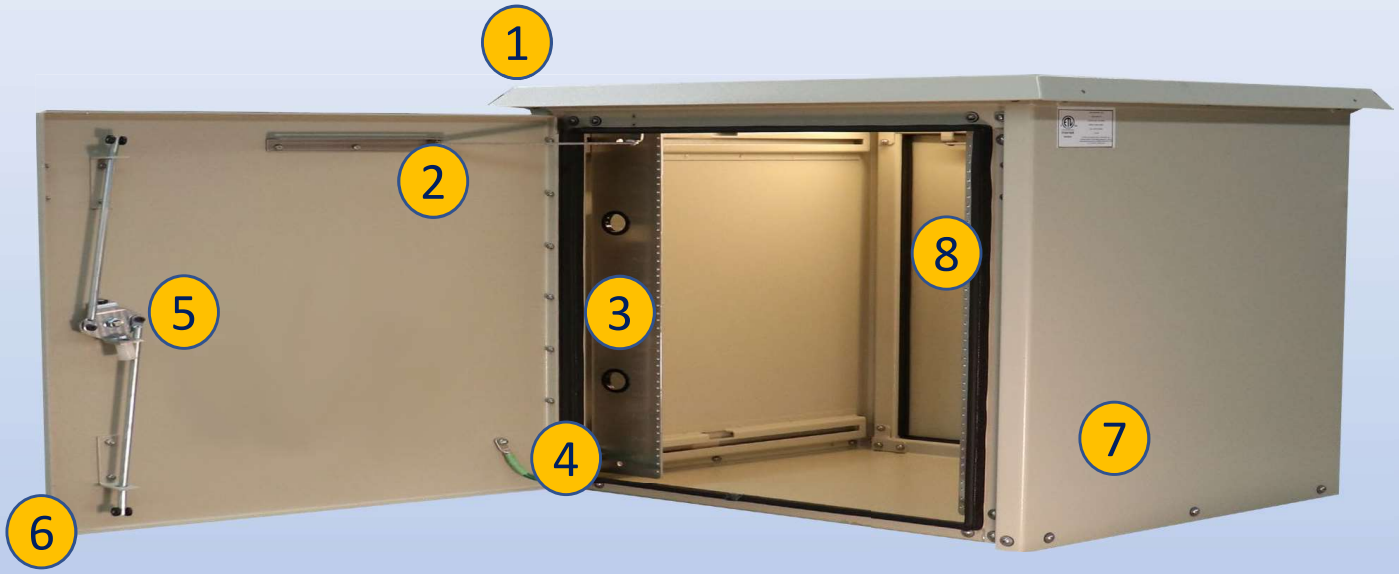

Features

1. Alumishield
2. Wind Locks
3. 19” and 23" Adjustable Racking Rails
4. Stainless Steel Door Hinge
5. 3-Point Locking System
6. Heavy Duty 0.160" Doors
7. Powder-Coat Cream
8. Rear Door Access

2301 S. HWY 77 Pauls Valley, OK 73075
T: (405)-665-2876
sales@ddbunlimited.com www.ddbunlimited.com

Scan this code for Climate Control

Scan this code for Accessories

REVISIONS		
REV.	DESCRIPTION	DATE
A	WEBSITE DRAWING WOD-16DX-UL50	11/30/2018

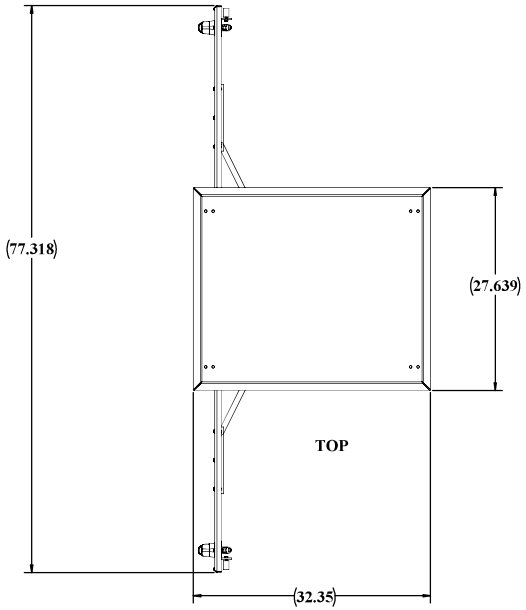

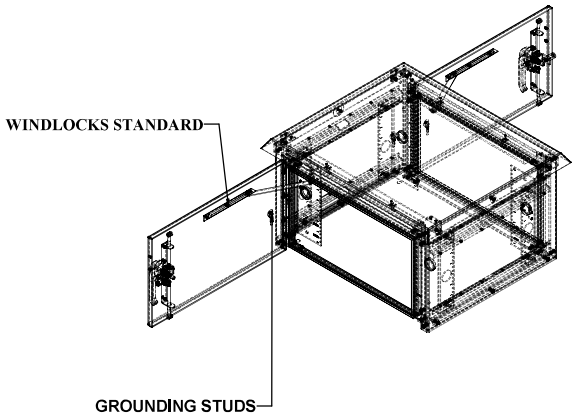

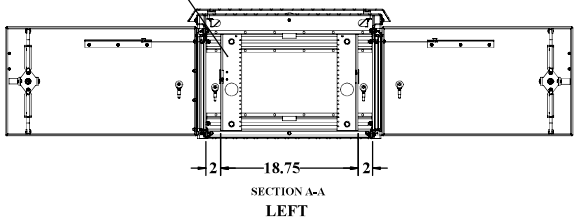

LEFT

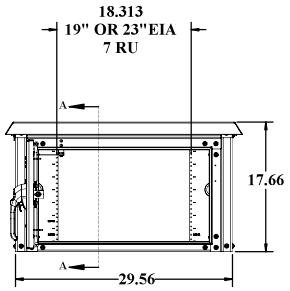

FRONT

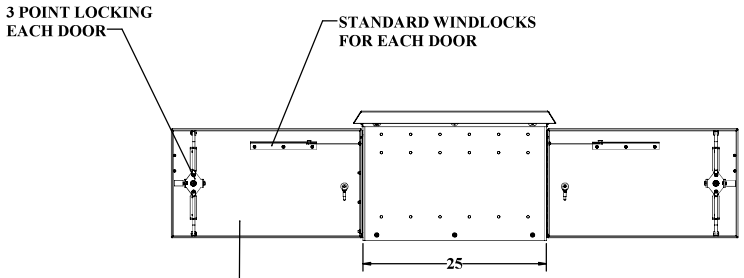

RIGHT

WELDED ENCLOSURE

UNLESS OTHERWISE SPECIFIED:	DDB Unlimited Inc.			
DIMENSIONS ARE IN INCHES ANGULAR: ±1° FRACTIONAL: ±1/32 TWO PLACE DECIMAL: ±.010 TWO PLACE DECIMAL: ±.005 THREE PLACE DECIMAL: ±.010 ALL HOLES ⌀ unless ⌀	WOD-16DX-UL50E WOD, 16"H, DX-UL50WOD-16DX-UL50E			
	SIZE	Cage Code:	DWG. NO.:	REV
	D	3S5Y5	01885	A
MATERIAL: -Material- not specified-	SCALE: 1:8	WEIGHT: 79 lbs.		SHEET 1 OF 3
PAINT:				
DO NOT SCALE DRAWING				

UNCLASSIFIED PUBLIC

File Location: (DDB)(EPDM Vault)
C:\DDB\DR Requests\Customers\DDB WEB DWG\WOD Family UL50 WEB\WOD-16DX-UL50 WEB\

DDB FORM 7.1-REV.K 08/03/17

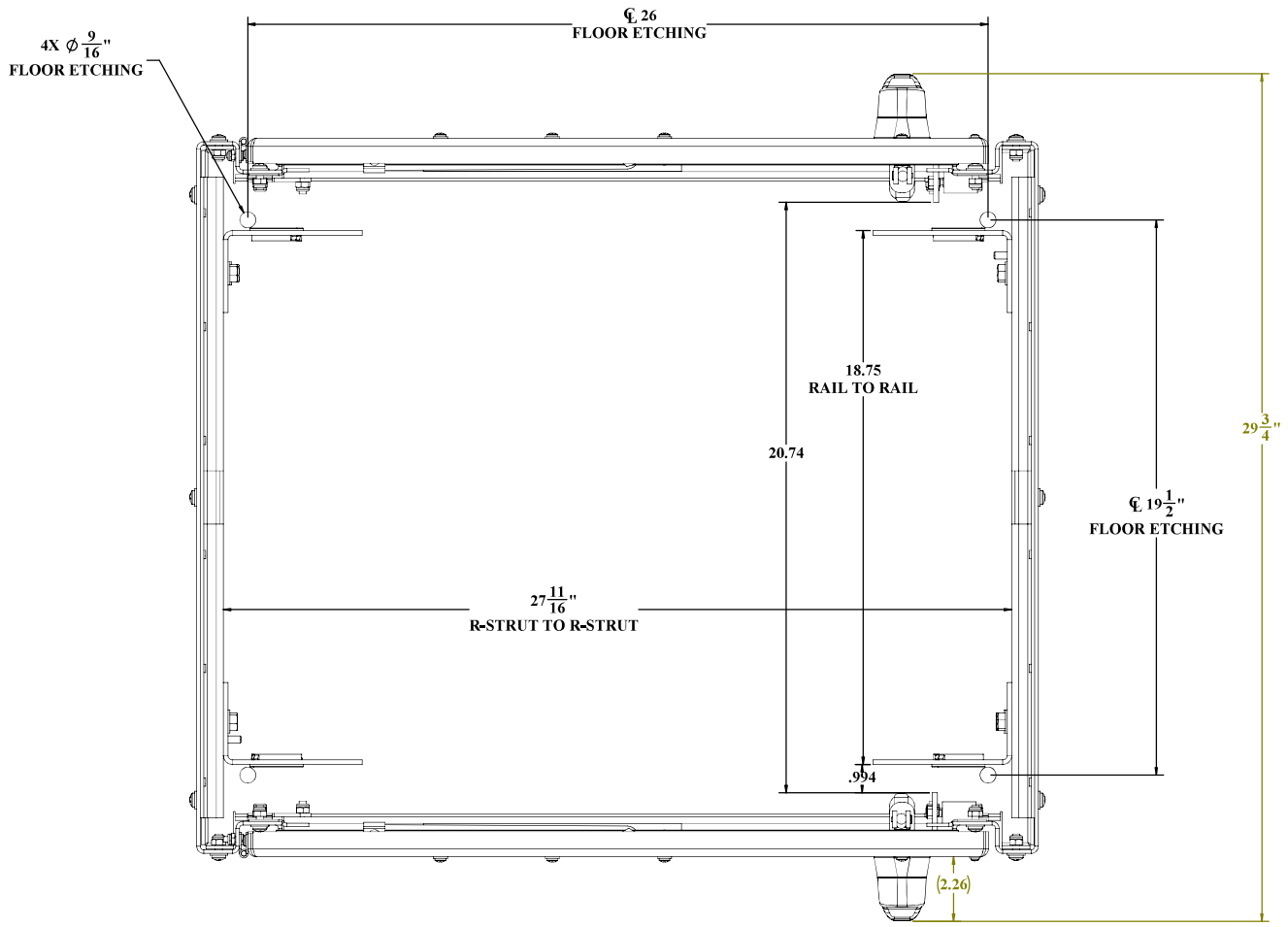

TOP VIEW CEILING AND ALUMASHIELD NOT SHOWN

UNLESS OTHERWISE SPECIFIED:	DDB Unlimited Inc.			
DIMENSIONS ARE IN INCHES ANGULAR: ±1° FRACTIONAL: ±1/64 TWO PLACE DECIMAL: ±.010 THREE PLACE DECIMAL: ±.005 ALL HOLES ⌀.005Ⓜ	DX-UL50E-CLOSED WOD, CLOSED, DX-UL50DX-UL50E-CLOSED			
	SIZE	Cage Code:	DWG. NO.:	REV
	D	3S5Y5	01885	A
MATERIAL: 5052-H32 0.125 ASTM B209-04	SCALE: 1:8	WEIGHT: 77 lbs.		SHEET 2 OF 3
PAINT: DIAMOND VOGEL, BEIGE GLOSS TEXTURE 874920				
DO NOT SCALE DRAWING				

DDB FORM 7.1-REV.K 08/03/17

UNCLASSIFIED PUBLIC

File Location: (DDB)(EPDM Vault)
C:\DDB\DR Requests\Customers\DDB WEB DWG\WOD Family UL50 WEB\WOD-16DX-UL50 WEB\

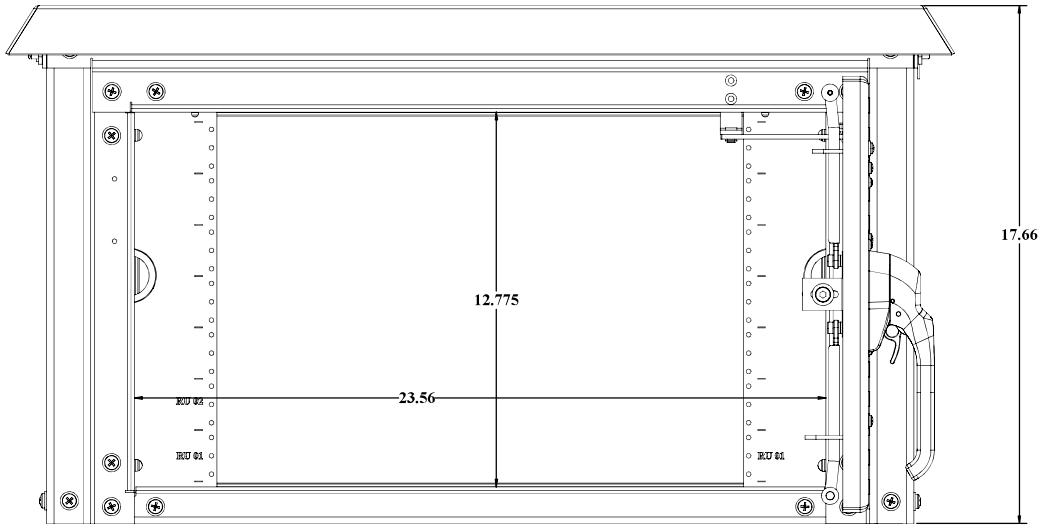

BACK VIEW BULB GASKET NOT SHOWN

UNLESS OTHERWISE SPECIFIED: DIMENSIONS ARE IN INCHES. ANGULAR: FRACTIONAL: TWO PLACE DECIMAL: THREE PLACE DECIMAL: ALL HOLES ⌀		*DDB Unlimited Inc.*	
		WOD-16DX-UL50E	
		WOD, 16"H, DX-UL50WOD-16DX-UL50E	
	SIZE	Cage Code:	DWG. NO.: REV
MATERIAL: 5052-H32-0.125 ASTM B209-04	D	3S5Y5	01885 A
PAINT: DIAMOND VOGEL, BEIGE GLOSS TEXTURE 874920	SCALE: 1:8	WEIGHT: 79 lbs.	SHEET 3 OF 3
DO NOT SCALE DRAWING			

DDB FORM 7.1-REV.K 08/03/17

UNCLASSIFIED PUBLIC

File Location: (DDB)(EPDM Vault)
C:\DDB\DR Requests\Customers\DDB WEB DWG\WOD Family UL50 WEB\WOD-16DX-UL50 WEB\

UL-50 WOD SERIES

WOD-16DDC-UL50

An ISO 9001 Certified company

Made in America

Believing in American Craftsmanship

15 YEAR WARRANTY

Why Choose the WOD-UL Series?



The WOD-16DDC-UL50 enclosure is the pinnacle of enclosures. With a fully welded chassis, heavy duty vulcanized gasketing and years of design and engineering behind it, you will find this will meet the most stringent requirements of the UL-50E Type 4 listing. Fully tested by a third party Nationally Recognized Testing Laboratory and listed to the UL-50E standard, you can trust that the WOD UL series will pass any test or inspection it faces. Designed with public safety requirements in mind, these units can be place in mission critical locations where communication or sensitive gear needs to be protected regardless of the situation. As with the standard WOD series, the WOD-UL series comes with standard 3-point locking, front and rear access with integrated wind locks, top mounted solar shield, adjustable R-strut racking, reversible 19" or 23" EIA racking, Alumiflex construction and our unmatched 15-year warranty. Moreover, there is an extensive list of optional accessories including HVAC units, electrical panels, and cable entry solutions to name a few. No matter the application, DDB provides cutting-edge design, competitive pricing, benchmark lead times, and guaranteed delivery. Whether you require a custom enclosure or something from our substantial stock, our professional staff is here to help you today.

Application Types

Telecommunications
Wireless/Broadband
Fiber Optics
Back Haul
Public Safety
DAS
Utility
Base Station
Military
Trailer-Based Communications
Wi-Fi
LTEE/4G/5G



Environmental & Safety Ratings:

- ✓ ETL environmentally listed to UL 50/50E, IP 66, Type 4
- ✓ ETL listed; Safety Requirements, UL 62368-1:2019 Ed.3, CSA C22.2

Features

15 Year Warranty
0.125" Aluminum Construction
3-Point Locking System
Heavy Duty Out-Door Construction
Front and Rear Access
Stainless Steel External Hardware/Hinge
Cream Powder-Coat, Standard
Wind Locks
Quick Shipping

Weight and Dimensions

Approximate Exterior Enclosure Dimensions:
18"H x 33"W x 39"D
Shipping Dimensions:
42"D x 42"W x 26"H- Palletized
Approximate Shipping Weight:
133 lbs.

2301 S. HWY 77 Pauls Valley, OK 73075
T: (405)-665-2876
sales@ddbunlimited.com www.ddbunlimited.com

DDB UNLIMITED®

An ISO 9001 Certified company

UL-50 WOD SERIES

WOD-16DDC-UL50

Made in America

Believing in American Craftsmanship

15 YEAR WARRANTY

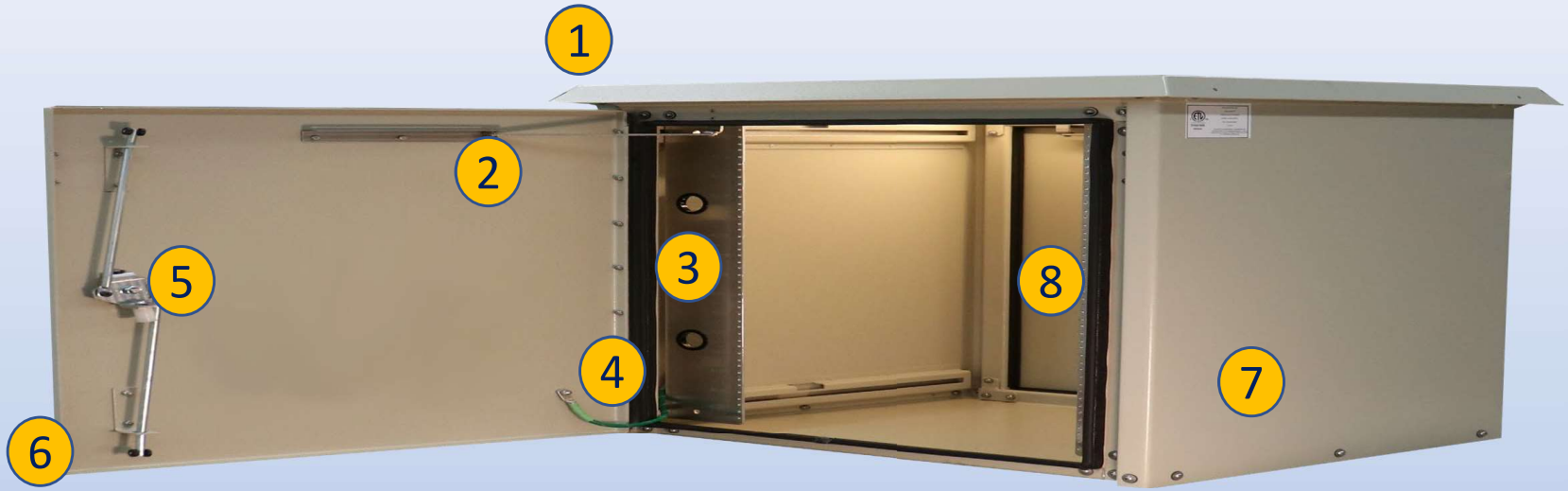

Features

1. Alumishield
2. Wind Locks
3. 19” and 23" Adjustable Racking Rails
4. Stainless Steel Door Hinge
5. 3-Point Locking System
6. Heavy Duty 0.160" Doors
7. Powder-Coat Cream
8. Rear Door Access

Scan this code for Climate Control

Scan this code for Accessories

2301 S. HWY 77 Pauls Valley, OK 73075
T: (405)-665-2876
sales@ddbunlimited.com www.ddbunlimited.com

REVISIONS		
REV.	DESCRIPTION	DATE
A	MADE DRAWING PER DR-02051	6/26/2019

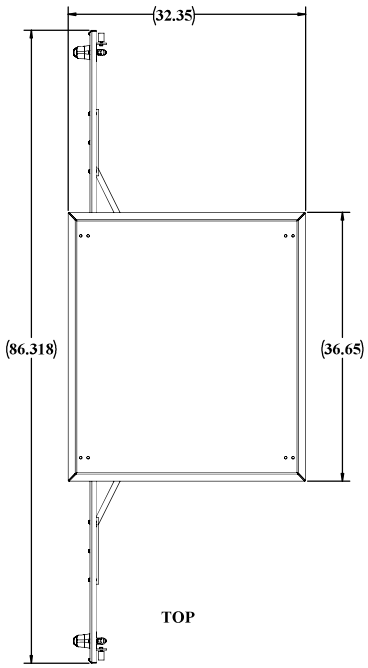

TOP

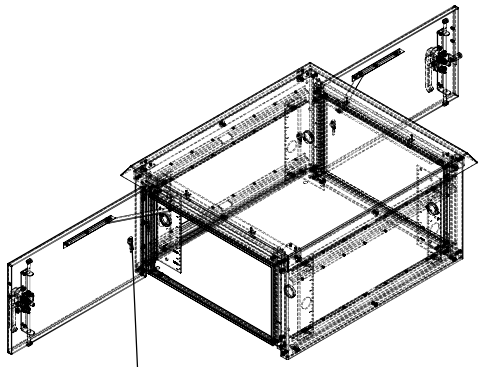

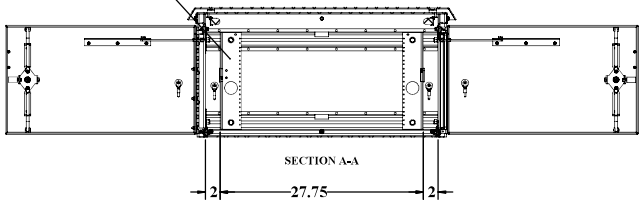

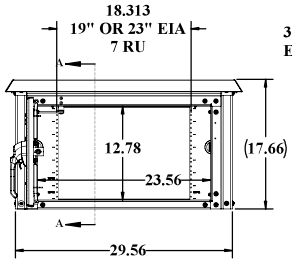

FRONT

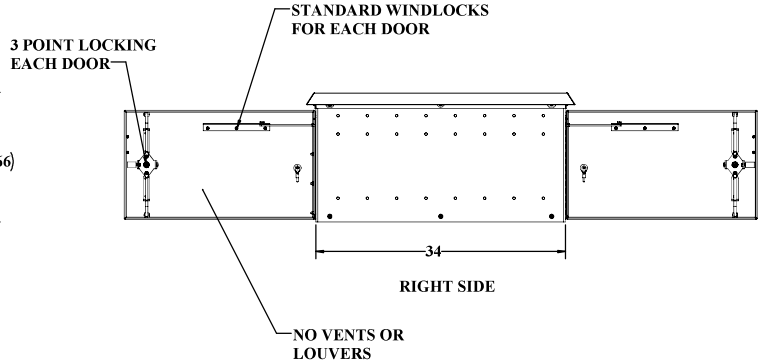

RIGHT SIDE

WELDED ENCLOSURE

UNLESS OTHERWISE SPECIFIED:	DDB Unlimited Inc.		
DIMENSIONS ARE IN INCHES ANGULAR: ±1° FRACTIONAL: ±1/32 TWO PLACE DECIMAL: ±.010 THREE PLACE DECIMAL: ±.005 ALL HOLES ±.003Ø	WOD-16DD-UL50E WOD, 16"H, DD UL50WOD-16DD-UL50E		
	SIZE: D	Cage Code: 385Y5	DWG. NO.: 02051 REV: A
MATERIAL: 5052-H32-0.125 ASTM B209-04	SCALE: 1:8	WEIGHT: 95 lbs.	SHEET 1 OF 3
PAINT: DIAMOND VOGEL, BRITE GLOSS TEXTURE 874920			
DO NOT SCALE DRAWING			

DDB FORM 7.1-REV.K 08/03/17

UNCLASSIFIED PUBLIC

File Location: (DDB)(PDM Vault)
C:\DDB\DR Requests\Customers\DDB WEB DWG\WOD Family UL50 WEB\02051-WOD-16DD-

WEB DRAWING (NOT FOR FABRICATION)

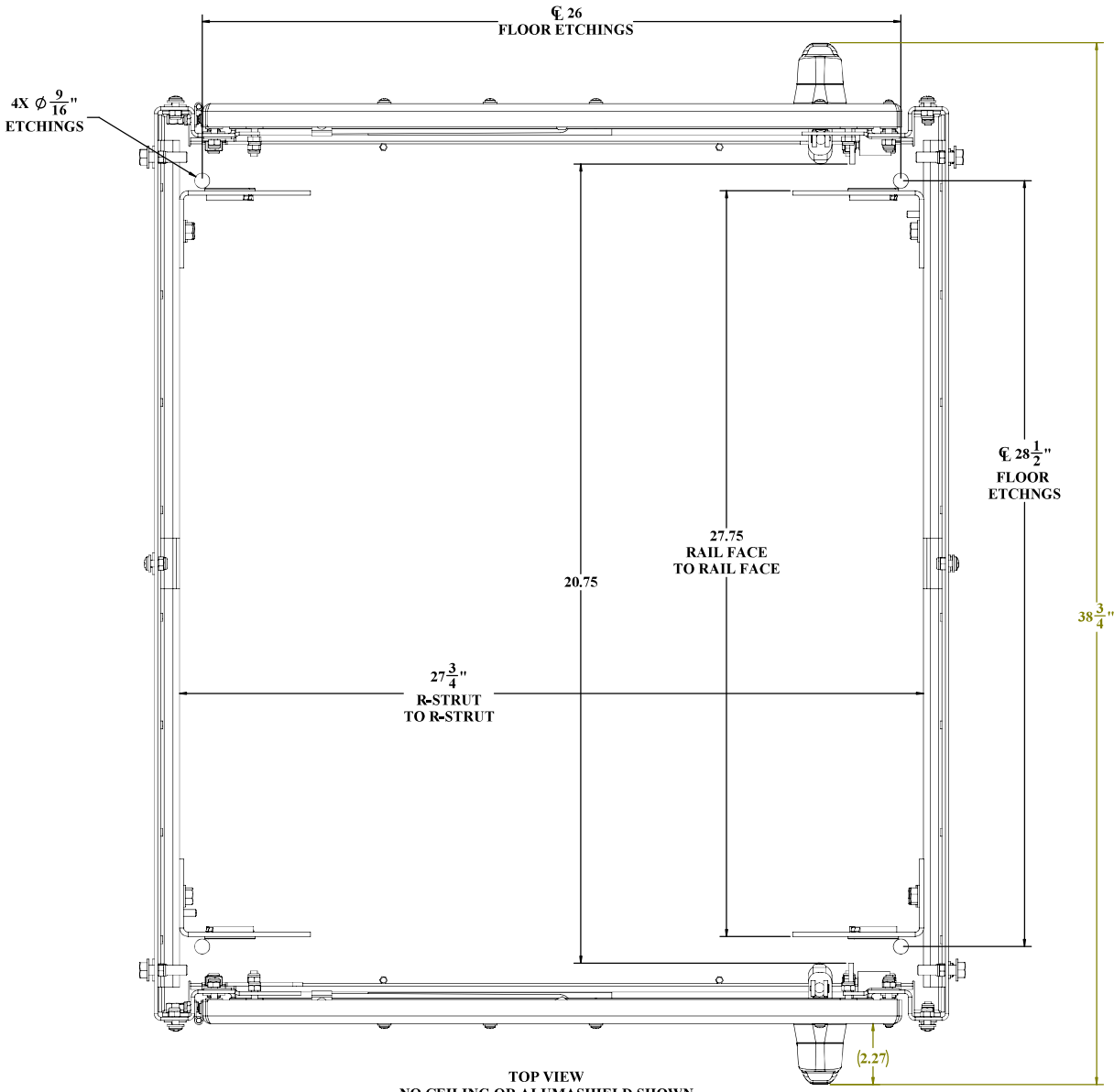

TOP VIEW
NO CEILING OR ALUMASHIELD SHOWN

WEB DRAWING (NOT FOR FABRICATION)

UNLESS OTHERWISE SPECIFIED:	DDB Unlimited Inc.			
DIMENSIONS ARE IN INCHES ANGULAR: ±1° FRACTIONAL: ±1/32 TWO PLACE DECIMAL: ±.010 THREE PLACE DECIMAL: ±.005 ALL EDGES ARE BREAK	DD-UL50E-CLOSED WOD, CLOSED , DD UL50DD-UL50E-CLOSED			
	SIZE	Cage Code:	DWG. NO.:	REV
	D	3B5Y5	02051	A
MATERIAL: 5052-H32 0.125 ASTM B209-04	SCALE: 1:8	WEIGHT: 93 lbs.		SHEET 2 OF 3
PAINT: DIAMOND VOGEL, BRIDE GLOSS TEXTURE 874920				
DO NOT SCALE DRAWING				

DDB FORM 7.1-REV.K 08/03/17

UNCLASSIFIED PUBLIC

File Location: (DDB) EPDM Vault
C:\DDB\DR Requests\Customers\DDB WEB DWG\WOD Family\ UL50 WEB\02051-WOD-16DD-

WEB DRAWING (NOT FOR FABRICATION)

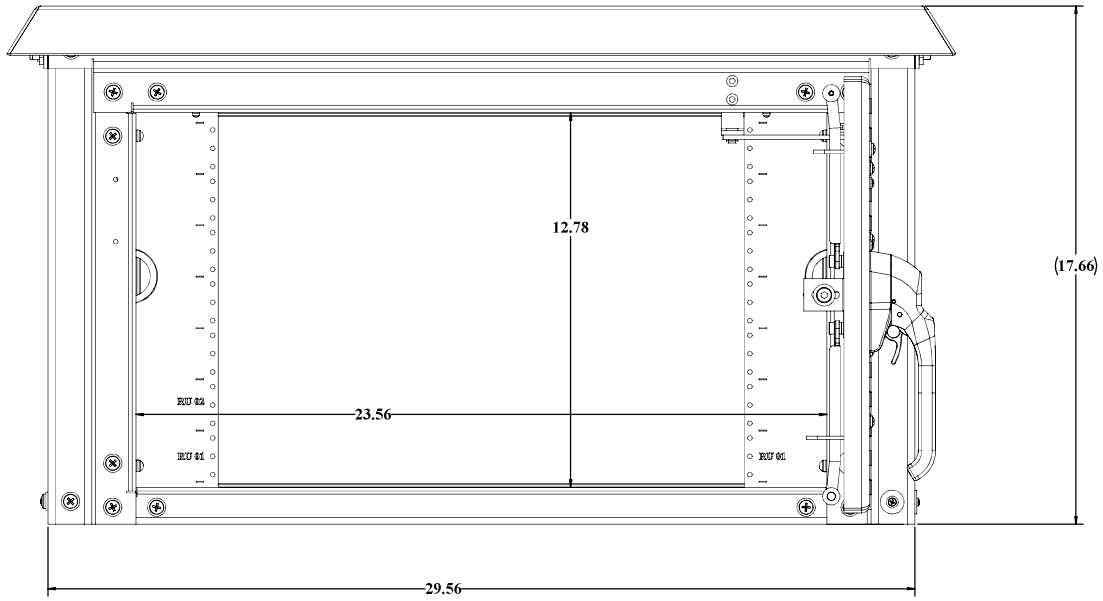

BACK VIEW
GASKET NOT SHOWN

WEB DRAWING (NOT FOR FABRICATION)

UNLESS OTHERWISE SPECIFIED:	DDB Unlimited Inc.			
DIMENSIONS ARE IN INCHES ANGULAR: ±1° FRACTIONAL: ±1/32 TWO PLACE DECIMAL: ±.010 THREE PLACE DECIMAL: ±.005 ALL HOLES ±.003	WOD-16DD-UL50E WOD, 16"H, DD UL50WOD-16DD-UL50E			
	SIZE	Cage Code:	DWG. NO.:	REV
	D	3S5Y5	02051	A
MATERIAL: 5052-H32-0.125 ASTM B209-04	SCALE: 1:8	WEIGHT: 95 lbs.		SHEET 3 OF 3
PAINT: DIAMOND VOGEL, RIDGE GLOSS TEXTURE 874920				
DO NOT SCALE DRAWING				

UNCLASSIFIED PUBLIC

File Location: (DDB) (EPDM Vault)
C:\DDB\DR Requests\Customers\DDB WEB DWG\WOD Family UL50 WEB\02051-WOD-16DD-

DDB FORM 7.1-REV.K 08/02/17

An ISO 9001 Certified company

UL-50 WOD SERIES

WOD-30DXC-UL50

Made in America

Believing in American Craftsmanship

15 YEAR WARRANTY

Why Choose the WOD-UL Series?



The WOD-30DXC-UL50 enclosure is the pinnacle of enclosures. With a fully welded chassis, heavy duty vulcanized gasketing and years of design and engineering behind it, you will find this will meet the most stringent requirements of the UL-50E Type 4 listing. Fully tested by a third party Nationally Recognized Testing Laboratory and listed to the UL-50E standard, you can trust that the WOD UL series will pass any test or inspection it faces. Designed with public safety requirements in mind, these units can be place in mission critical locations where communication or sensitive gear needs to be protected regardless of the situation. As with the standard WOD series, the WOD-UL series comes with standard 3-point locking, front and rear access with integrated wind locks, top mounted solar shield, adjustable R-strut racking, reversible 19" or 23" EIA racking, Alumiflex construction and our unmatched 15-year warranty. Moreover, there is an extensive list of optional accessories including HVAC units, electrical panels, and cable entry solutions to name a few. No matter the application, DDB provides cutting-edge design, competitive pricing, benchmark lead times, and guaranteed delivery. Whether you require a custom enclosure or something from our substantial stock, our professional staff is here to help you today.

Application Types

Telecommunications
Wireless/Broadband
Fiber Optics
Back Haul
Public Safety
DAS
Utility
Base Station
Military
Trailer-Based Communications
Wi-Fi
LTEE/4G/5G



Environmental & Safety Ratings:

- ✓ ETL environmentally listed to UL 50/50E, IP 66, Type 4
- ✓ ETL listed; Safety Requirements, UL 62368-1:2019 Ed.3, CSA C22.2

Features

15 Year Warranty
0.125" Aluminum Construction
3-Point Locking System
Heavy Duty Out-Door Construction
Front and Rear Access
Stainless Steel External Hardware/Hinge
Cream Powder-Coat, Standard
Wind Locks
Quick Shipping

Weight and Dimensions

Approximate Exterior Enclosure Dimensions:
32"H x 33"W x 30"D
Shipping Dimensions:
42"D x 42"W x 40"H- Palletized
Approximate Shipping Weight:
144 lbs.

2301 S. HWY 77 Pauls Valley, OK 73075
T: (405)-665-2876
sales@ddbunlimited.com www.ddbunlimited.com

UL-50 WOD SERIES

WOD-30DXC-UL50

An ISO 9001 Certified company

Made in America

Believing in American Craftsmanship

15 YEAR WARRANTY

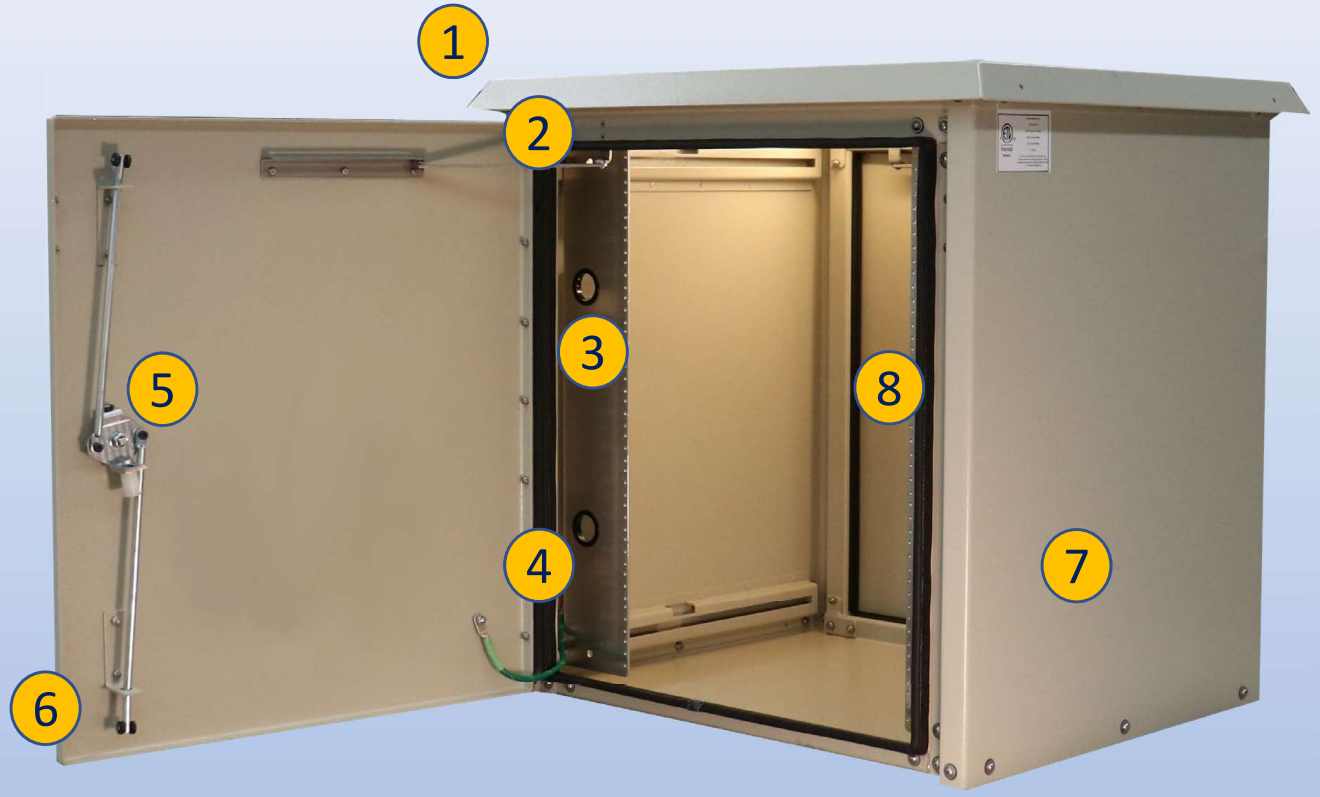

Features

1. Alumishield
2. Wind Locks
3. 19” and 23" Adjustable Racking Rails
4. Stainless Steel Door Hinge
5. 3-Point Locking System
6. Heavy Duty 0.160" Doors
7. Powder-Coat Cream
8. Rear Door Access

2301 S. HWY 77 Pauls Valley, OK 73075

T: (405)-665-2876

sales@ddbunlimited.com www.ddbunlimited.com

Scan this code for Climate Control

Scan this code for Accessories

REVISIONS		
REV.	DESCRIPTION	DATE
A	CREATED DRAWING PER DR-02052	7/16/2019

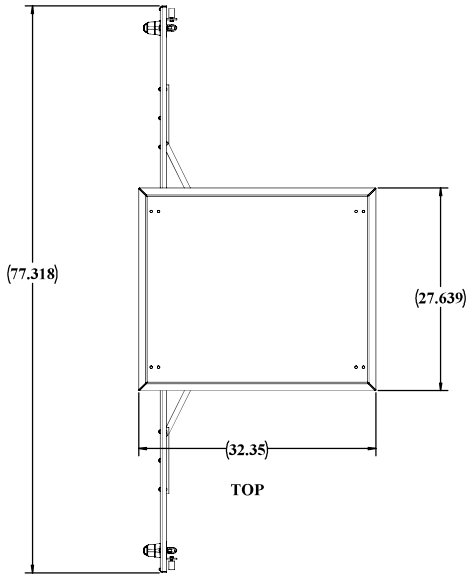

TOP

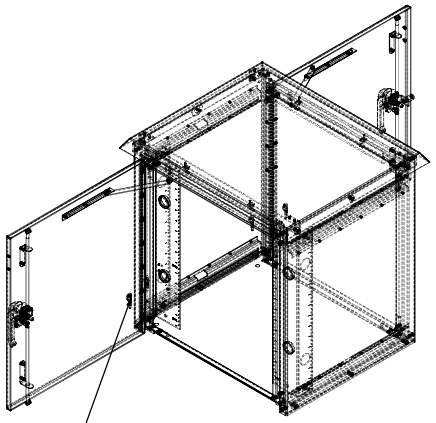

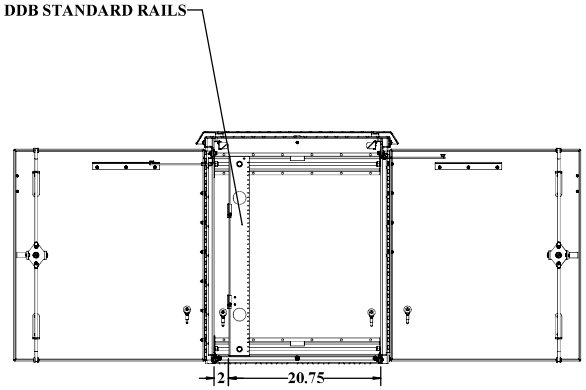

SECTION A-A
SCALE 1 : 8

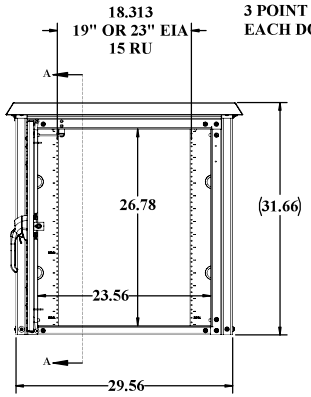

FRONT

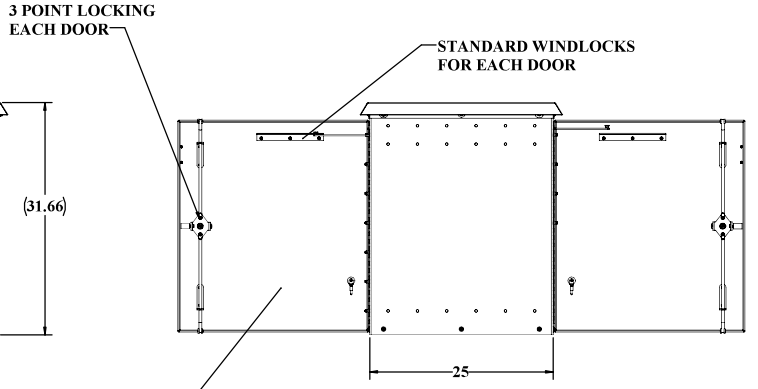

RIGHT SIDE

NO VENTS OR
LOUVERS

UNLESS OTHERWISE SPECIFIED:	DDB Unlimited Inc.			
DIMENSIONS ARE IN INCHES ANGULAR: ±1° FRACTIONAL: NO DECIMAL: ±1/32 TWO PLACE DECIMAL: ±.010 TWO PLACE DECIMAL: ±.005 THREE PLACE DECIMAL: ±.010 ALL HOLES ±.003	WOD-30DX-UL50E WOD, 30"H, DX-UL50WOD-30DX-UL50E			
	SIZE	Cage Code:	DWG. NO.:	REV
	D	3S5Y5	02052	A
MATERIAL: 5052-H32-0.125 ASTM B209-04	SCALE: 1:12	WEIGHT: 102 lbs.	SHEET 1 OF 3	
PAINT: DIAMOND VOGEL, BEIGE GLOSS TEXTURE E14920				
DO NOT SCALE DRAWING				

DDB FORM 7.1-REV.K 08/03/17

UNCLASSIFIED PUBLIC

File Location: (DDB)(EPDM Vault)
C:\DDB\DR Requests\Customers\DDB WEB DWG\WOD Family UL50 WEB\WOD-30DX-UL50 WEB\

WEB DRAWING (NOT FOR FABRICATION)

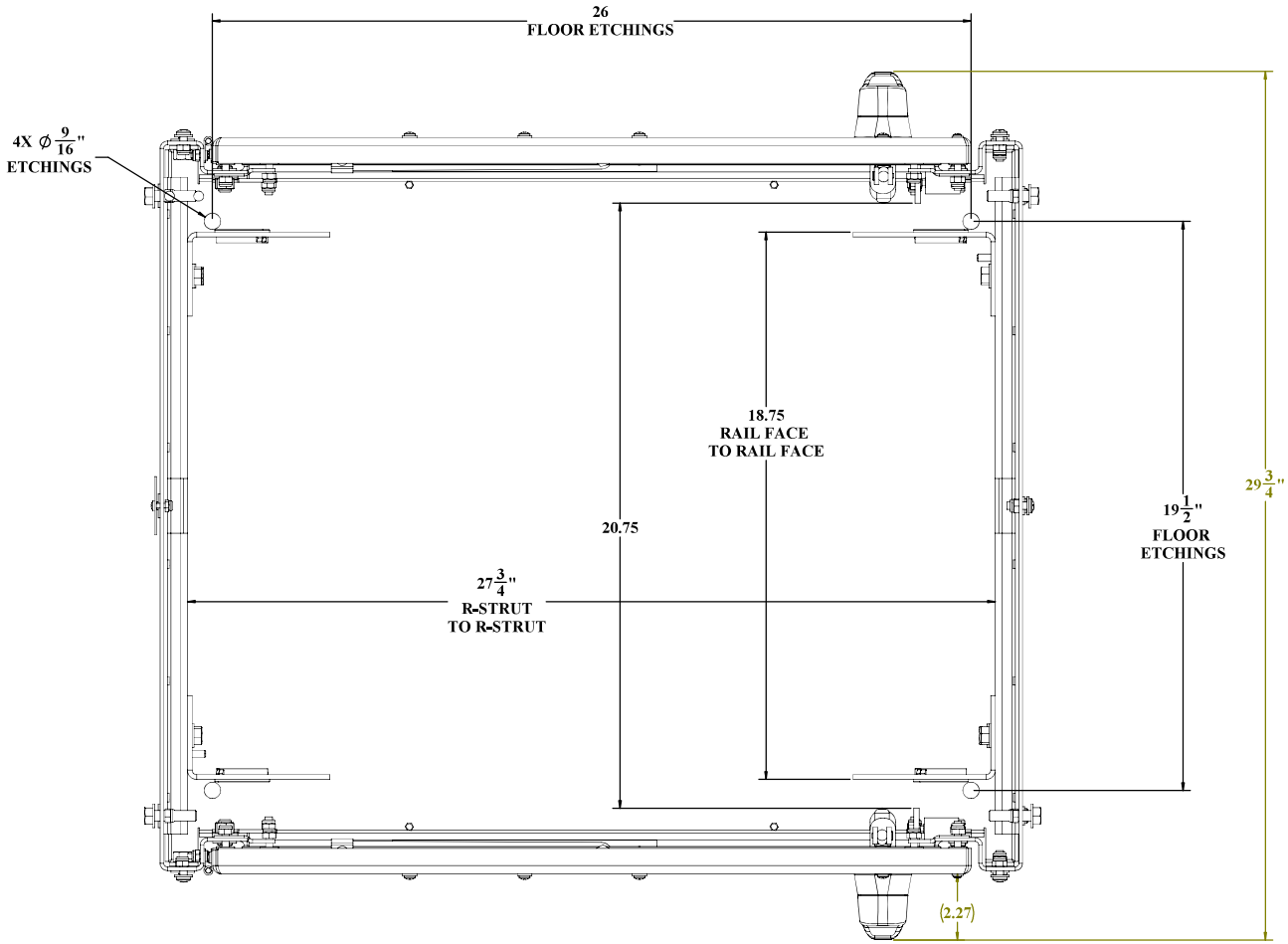

TOP VIEW
NO CEILING OR ALUMASHIELD SHOWN

DDB FORM 7.1-REV.K 08/02/17

WEB DRAWING (NOT FOR FABRICATION)

UNLESS OTHERWISE SPECIFIED:	DDB Unlimited Inc.		
DIMENSIONS ARE IN INCHES ANGULAR: ±1° FRACTIONAL/NO DECIMAL: ±1/16 TWO PLACE DECIMAL: ±.010 TWO PLACE DECIMAL: ±.0050 THREE PLACE DECIMAL: ±.0030 ALL EDGES ⌀.0005	DX-UL50E-CLOSED WOD, CLOSED, DX-UL50DX-UL50E-CLOSED		
	SIZE: D	Cage Code: 385Y5	DWG. NO.: 02052 REV: A
MATERIAL: 5052-H32-0.125 ASTM B209-04	SCALE: 1:12	WEIGHT: 77 lbs.	SHEET 2 OF 3
PAINT: DIAMOND VOGEL, BEIGE GLOSS TEXTURE 874920			
DO NOT SCALE DRAWING			

UNCLASSIFIED PUBLIC

WEB DRAWING (NOT FOR FABRICATION)

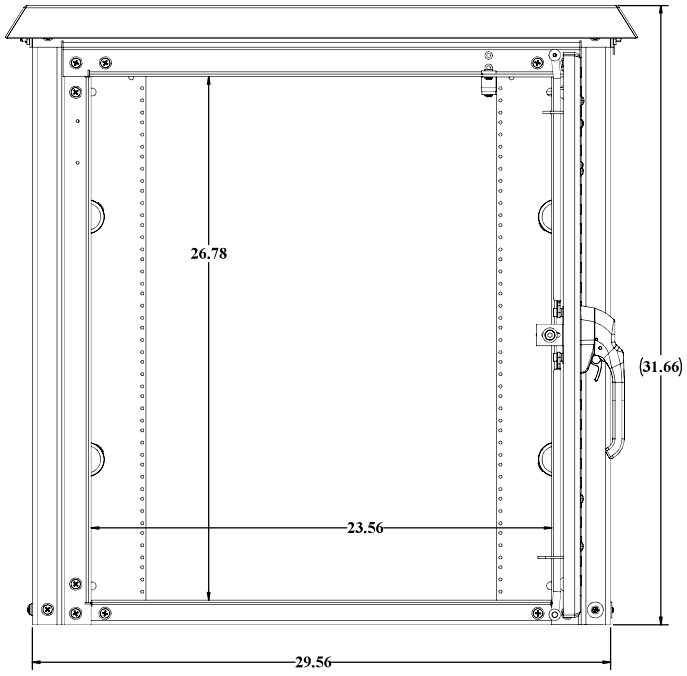

BACK VIEW
GASKET NOT SHOWN

WEB DRAWING (NOT FOR FABRICATION)

UNLESS OTHERWISE SPECIFIED:	DDB Unlimited Inc.		
DIMENSIONS ARE IN INCHES ANGULAR: ±1° FRACTIONAL/NO DECIMAL: ±0.125 TWO PLACE DECIMAL: ±0.010 TWO PLACE DECIMAL: ±0.005 THREE PLACE DECIMAL: ±0.010 ALL HOLES ±0.005	WOD-30DX-UL50E WOD, 30"H, DX-UL50WOD-30DX-UL50E		
	SIZE: D	Cage Code: 385Y5	DWG. NO.: 02052 REV: A
MATERIAL: 16GA HRS, 12GA ASTM B209-04	SCALE: 1:12	WEIGHT: 102 lbs.	SHEET 3 OF 3
PAINT: DIAMOND VOGEL, BEIGE GLOSS TEXTURE #34020			
DO NOT SCALE DRAWING			

DDB FORM 7.1-REV.K 08/02/17

UNCLASSIFIED PUBLIC

File Location: (DDB)(EPDM Vault)
C:\DDB\DR Requests\Customers\DDB WEB DWG\WOD Family UL50 WEB\WOD-30DX-UL50 WEB\

An ISO 9001 Certified company

UL-50 WOD SERIES

WOD-30DDC-UL50

Made in America

Believing in American Craftsmanship

15 YEAR WARRANTY

Why Choose the WOD-UL Series?



The WOD-30DDC-UL50 enclosure is the pinnacle of enclosures. With a fully welded chassis, heavy duty vulcanized gasketing and years of design and engineering behind it, you will find this will meet the most stringent requirements of the UL-50E Type 4 listing. Fully tested by a third party Nationally Recognized Testing Laboratory and listed to the UL-50E standard, you can trust that the WOD UL series will pass any test or inspection it faces. Designed with public safety requirements in mind, these units can be place in mission critical locations where communication or sensitive gear needs to be protected regardless of the situation. As with the standard WOD series, the WOD-UL series comes with standard 3-point locking, front and rear access with integrated wind locks, top mounted solar shield, adjustable R-strut racking, reversible 19" or 23" EIA racking, Alumiflex construction and our unmatched 15-year warranty. Moreover, there is an extensive list of optional accessories including HVAC units, electrical panels, and cable entry solutions to name a few. No matter the application, DDB provides cutting-edge design, competitive pricing, benchmark lead times, and guaranteed delivery. Whether you require a custom enclosure or something from our substantial stock, our professional staff is here to help you today.

Application Types

Telecommunications
Wireless/Broadband
Fiber Optics
Back Haul
Public Safety
DAS
Utility
Base Station
Military
Trailer-Based Communications
Wi-Fi
LTEE/4G/5G



Environmental & Safety Ratings:

- ✓ ETL environmentally listed to UL 50/50E, IP 66, Type 4
- ✓ ETL listed; Safety Requirements, UL 62368-1:2019 Ed.3, CSA C22.2

Features

15 Year Warranty
0.125" Aluminum Construction
3-Point Locking System
Heavy Duty Out-Door Construction
Front and Rear Access
Stainless Steel External Hardware/Hinge
Cream Powder-Coat, Standard
Wind Locks
Quick Shipping

Weight and Dimensions

Approximate Exterior Enclosure Dimensions:
32"H x 33"W x 39"D
Shipping Dimensions:
42"D x 42"W x 40"H- Palletized
Approximate Shipping Weight:
170 lbs.

2301 S. HWY 77 Pauls Valley, OK 73075
T: (405)-665-2876
sales@ddbunlimited.com www.ddbunlimited.com

An ISO 9001 Certified company

UL-50 WOD SERIES

WOD-30DDC-UL50

Made in America

Believing in American Craftsmanship

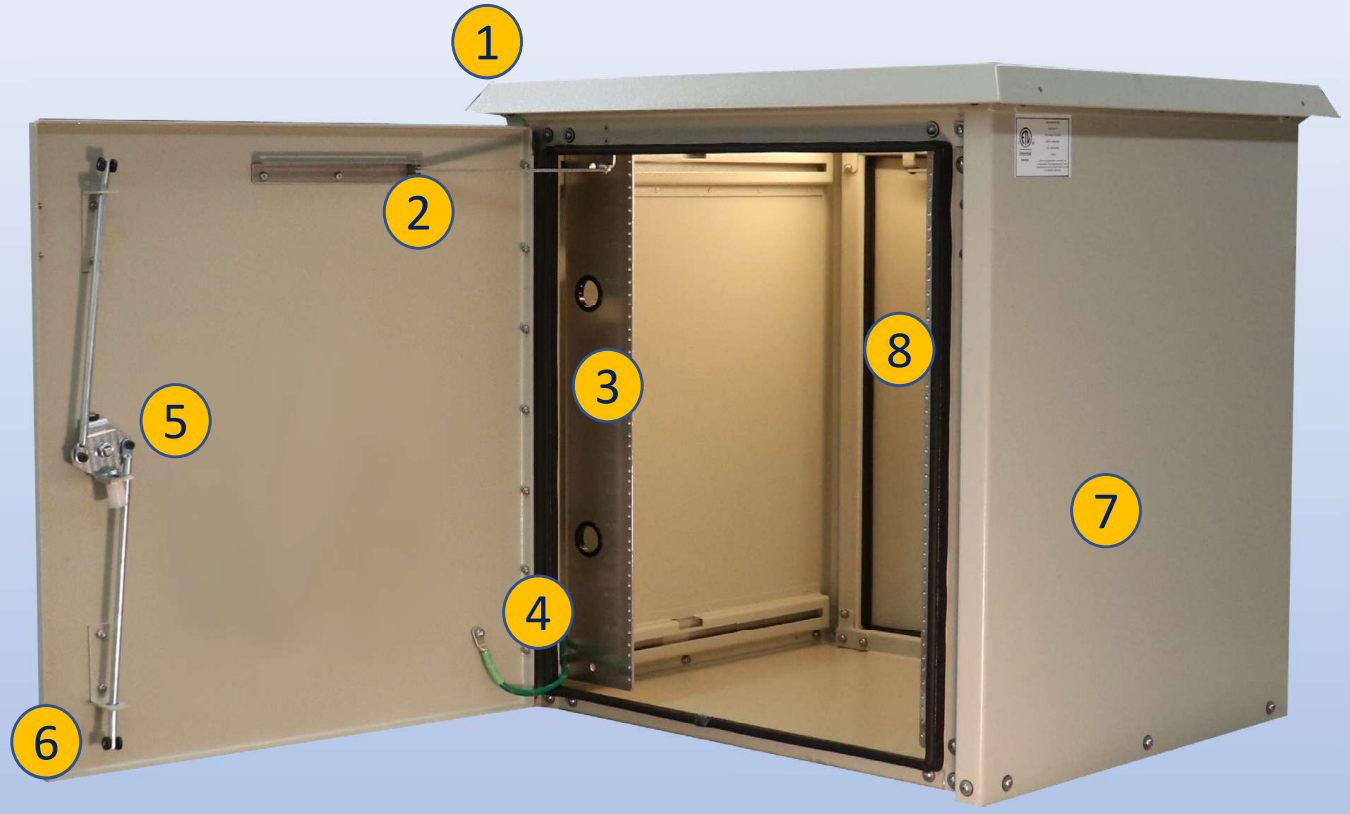

Features

1. Alumishield
2. Wind Locks
3. 19” and 23" Adjustable Racking Rails
4. Stainless Steel Door Hinge
5. 3-Point Locking System
6. Heavy Duty 0.160" Doors
7. Powder-Coat Cream
8. Rear Door Access

2301 S. HWY 77 Pauls Valley, OK 73075
T: (405)-665-2876
sales@ddbunlimited.com www.ddbunlimited.com

Scan this code for Climate Control

Scan this code for Accessories

REVISIONS		
REV.	DESCRIPTION	DATE
A	CREATED DRAWING PER DR-02053	7/16/2019

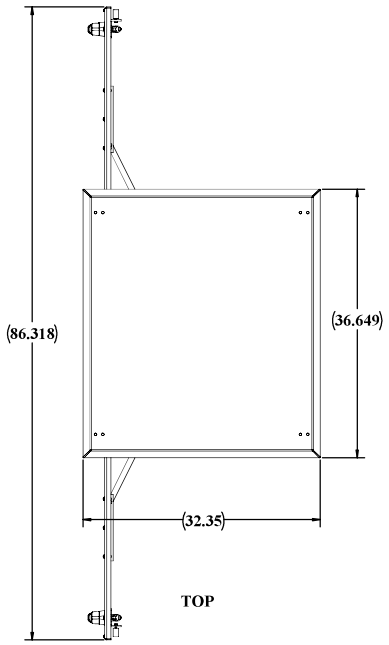

TOP

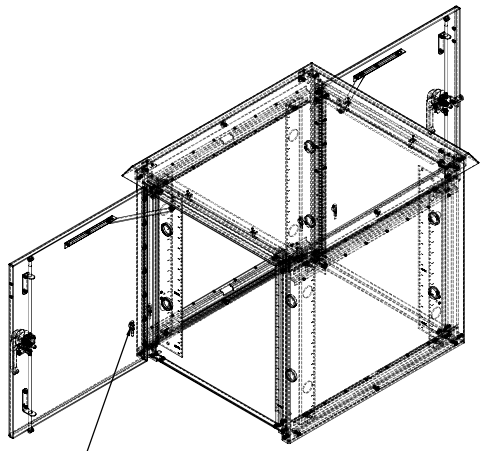

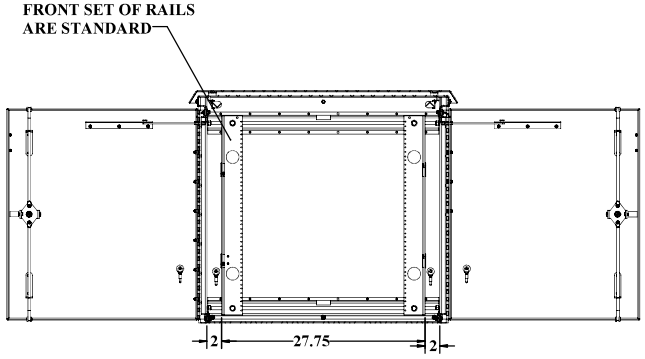

SECTION A-A
SCALE 1 : 8

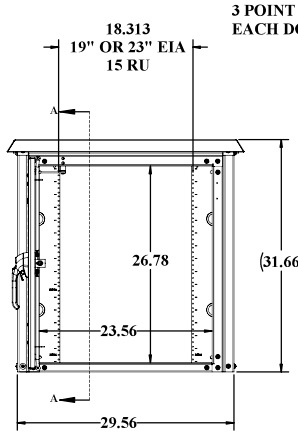

FRONT

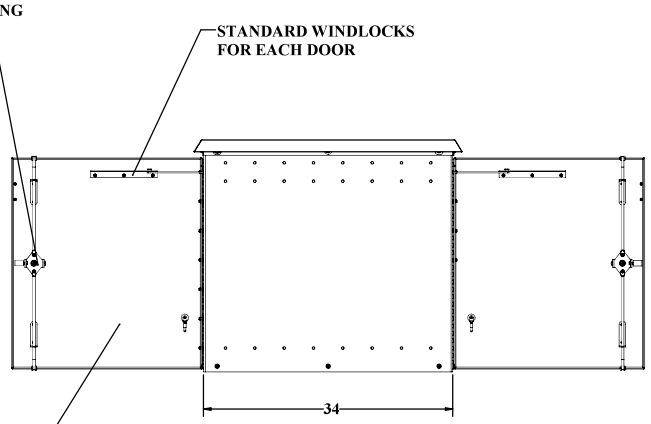

RIGHT SIDE

WELDED ENCLOSURE

UNLESS OTHERWISE SPECIFIED:	DDB Unlimited Inc.		
DIMENSIONS ARE IN INCHES ANGULAR: FRACTIONAL ±1/64 DECIMAL: ±0.030 TWO PLACE DECIMAL: ±0.010 THREE PLACE DECIMAL: ±0.005	WOD-30DD-UL50E WOD, 30"H, DD-UL50WOD-30DD-UL50E		
	SIZE: D	Cage Code: 385Y5	DWG. NO.: 02053 REV: A
MATERIAL: 5052-H32 0.125 ASTM B209-04	SCALE: 1:12	WEIGHT: 127 lbs.	SHEET 1 OF 3
PAINT: DIAMOND VOGEL, BEIGE GLOSS TEXTURE 874920			
DO NOT SCALE DRAWING			

UNCLASSIFIED PUBLIC

File Location: (DDB)(EPDM Vault)
C:\DDB\DR Requests\Customers\DDB WEB DWG\WOD Family UL50 WEB\WOD-30DD-UL50 WEB\

WEB DRAWING (NOT FOR FABRICATION)

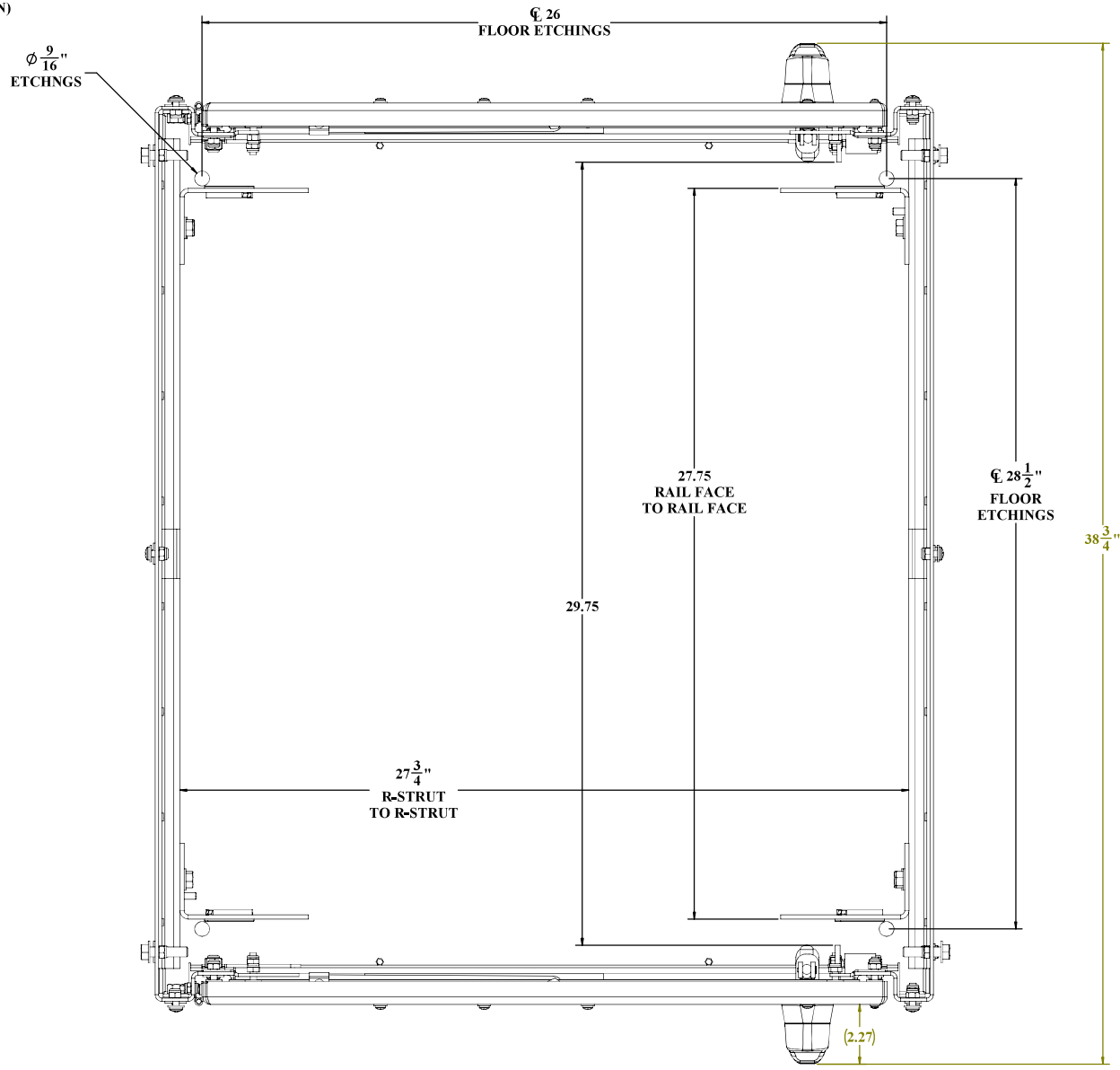

TOP VIEW
NO CEILING OR ALUMASHIELD SHOWN

DDB FORM 7.1-REV.K 08/03/17

WEB DRAWING (NOT FOR FABRICATION)

UNLESS OTHERWISE SPECIFIED: DIMENSIONS ARE IN INCHES. ANGULAR: FRACTIONAL: TWO PLACE DECIMAL: THREE PLACE DECIMAL: ALL EDGES	DDB Unlimited Inc. DD-UL50E-CLOSED WOD, CLOSED , DD UL50DD-UL50E-CLOSED
MATERIAL: 5052-H32-0.125 ASTM B209-04	SIZE D · Cage Code: 3S5Y5 · DWG. NO.: 02053 · REV A
PAINT: DIAMOND VOGEL, BEIGE GLOSS TEXTURE 874920	SCALE: 1:12 · WEIGHT: 93 lbs. · SHEET 2 OF 3
DO NOT SCALE DRAWING	

CUSTOMER CONFIDENTIAL

File Location: (DDB)(EPDM Vault)
C:\DDB\DR Requests\Customers\DDB WEB DWG\WOD Family UL50 WEB\WOD-30DD-UL50 WEB\

WEB DRAWING (NOT FOR FABRICATION)

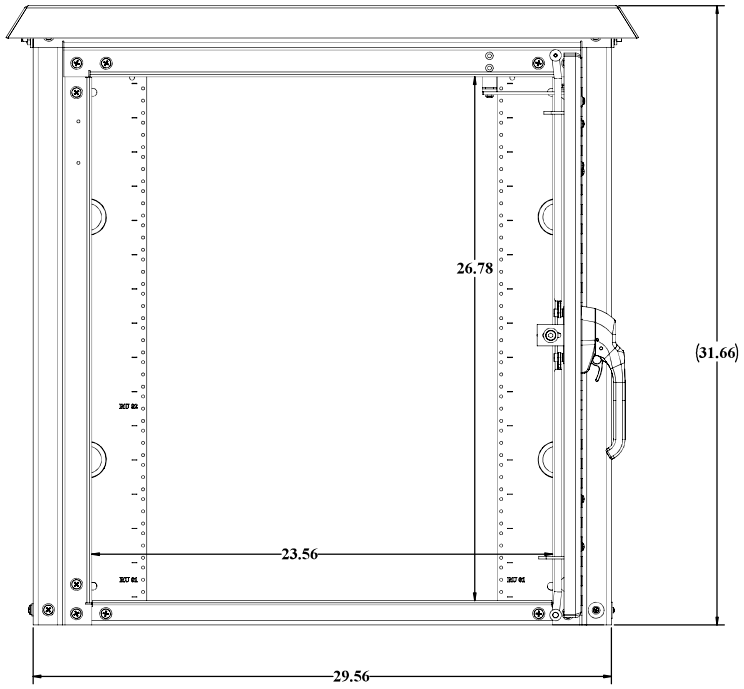

BACK VIEW
GASKET NOT SHOWN

WEB DRAWING (NOT FOR FABRICATION)

UNLESS OTHERWISE SPECIFIED:	*DDB Unlimited Inc.*		
DIMENSIONS ARE IN INCHES ANGULAR: ±1° FRACTIONAL: ±1/32 TWO PLACE DECIMAL: ±.010 THREE PLACE DECIMAL: ±.005 ALL HOLES ±.003	WOD-30DD-UL50E WOD, 30"H, DD-UL50WOD-30DD-UL50E		
	SIZE: D	Cage Code: 385Y5	DWG. NO.: 02053 REV: A
MATERIAL: 16GA HRS, T.P. ASTM B209-04	SCALE: 1:12	WEIGHT: 127 lbs.	SHEET 3 OF 3
PAINT: DIAMOND VOGEL, BEIGE GLOSS TEXTURE #14020			
DO NOT SCALE DRAWING			

DDB FORM 7.1-REV.K 08/03/17

CUSTOMER CONFIDENTIAL

File Location: (DDB)(EPDM Vault)
C:\DDB\DR Requests\Customers\DDB WEB DWG\WOD Family UL50 WEB\WOD-30DD-UL50 WEB\

DDB UNLIMITED®

An ISO 9001 Certified company

UL-50 WOD SERIES

WOD-30DDXC-UL50

Made in America

Believing in American Craftsmanship

15 YEAR WARRANTY

Why Choose the WOD-UL Series?



The WOD-30DDXC-UL50 enclosure is the pinnacle of enclosures. With a fully welded chassis, heavy duty vulcanized gasketing and years of design and engineering behind it, you will find this will meet the most stringent requirements of the UL-50E Type 4 listing. Fully tested by a third party Nationally Recognized Testing Laboratory and listed to the UL-50E standard, you can trust that the WOD UL series will pass any test or inspection it faces. Designed with public safety requirements in mind, these units can be place in mission critical locations where communication or sensitive gear needs to be protected regardless of the situation. As with the standard WOD series, the WOD-UL series comes with standard 3-point locking, front and rear access with integrated wind locks, top mounted solar shield, adjustable R-strut racking, reversible 19” or 23” EIA racking, Alumiflex construction and our unmatched 15-year warranty. Moreover, there is an extensive list of optional accessories including HVAC units, electrical panels, and cable entry solutions to name a few. No matter the application, DDB provides cutting-edge design, competitive pricing, benchmark lead times, and guaranteed delivery. Whether you require a custom enclosure or something from our substantial stock, our professional staff is here to help you today.

Features

15 Year Warranty

0.125" Aluminum Construction

3-Point Locking System

Heavy Duty Out-Door Construction

Front and Rear Access

Stainless Steel External Hardware/Hinge

Cream Powder-Coat, Standard

Wind Locks

Quick Shipping

Application Types

Telecommunications
Wireless/Broadband
Fiber Optics
Back Haul
Public Safety
DAS
Utility
Base Station
Military
Trailer-Based Communications
Wi-Fi
LTEE/4G/5G



Environmental & Safety Ratings:

- ✓ ETL environmentally listed to UL 50/50E, IP 66, Type 4
- ✓ ETL listed; Safety Requirements, UL 62368-1:2019 Ed.3, CSA C22.2

Weight and Dimensions

Approximate Exterior Enclosure Dimensions:

32”H x 33”W x 47”D

Shipping Dimensions:

52”D x 42”W x 40”H- Palletized

Approximate Shipping Weight:

194 lbs.

2301 S. HWY 77 Pauls Valley, OK 73075
T: (405)-665-2876
sales@ddbunlimited.com www.ddbunlimited.com

UL-50 WOD SERIES

WOD-30DDXC-UL50

An ISO 9001 Certified company

Made in America

Believing in American Craftsmanship

15 YEAR WARRANTY



Features

1. Alumishield
2. Wind Locks
3. 19” and 23" Adjustable Racking Rails
4. Stainless Steel Door Hinge
5. 3-Point Locking System
6. Heavy Duty 0.160" Doors
7. Powder-Coat Cream
8. Rear Door Access

2301 S. HWY 77 Pauls Valley, OK 73075
T: (405)-665-2876
sales@ddbunlimited.com www.ddbunlimited.com

Scan this code for Climate Control

Scan this code for Accessories

REVISIONS		
REV.	DESCRIPTION	DATE
A	CREATED DRAWING PER DR-02054	7/16/2019

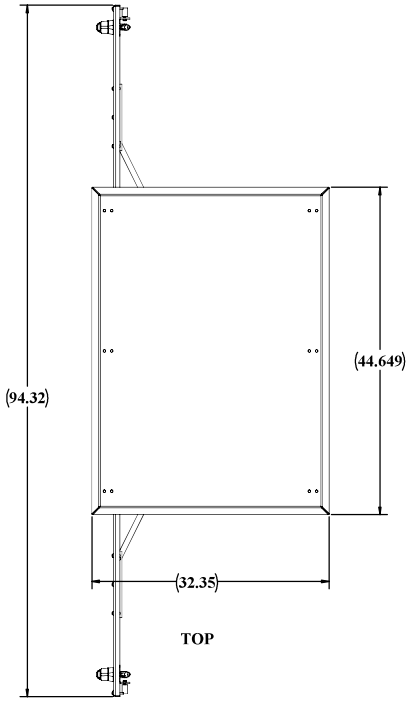

TOP

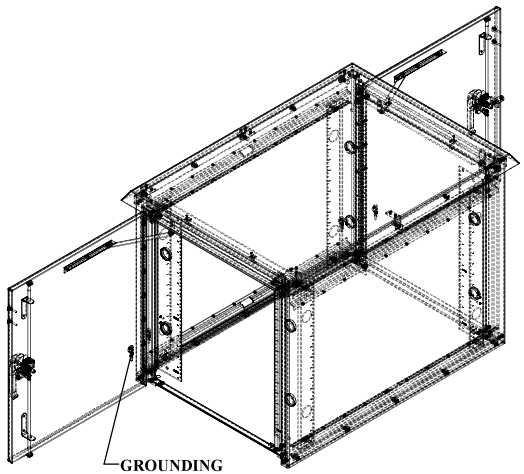

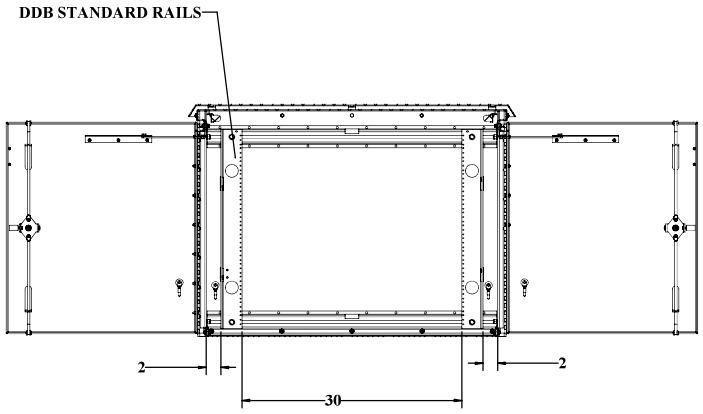

SECTION A-A
SCALE 1 : 8

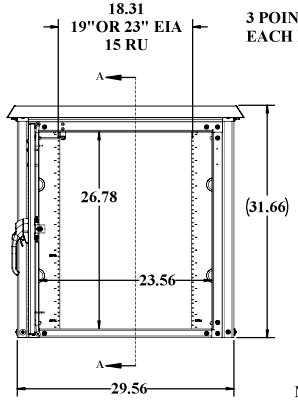

FRONT

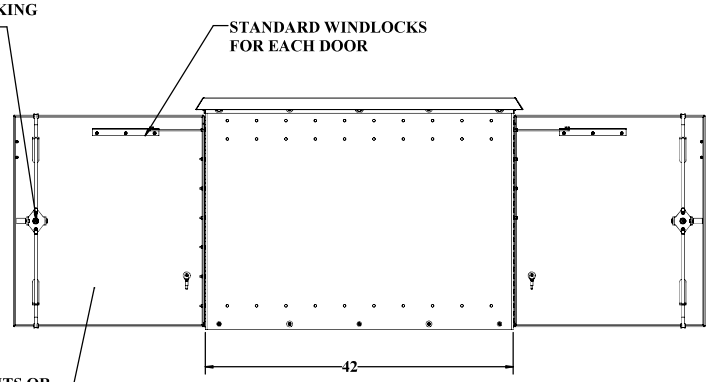

RIGHT SIDE

WELDED ENCLOSURE

UNLESS OTHERWISE SPECIFIED:	DDB Unlimited Inc.		
DIMENSIONS ARE IN INCHES ANGULAR: FRACTIONAL: TWO PLACE DECIMAL: THREE PLACE DECIMAL: ALL HOLES ⌀	WOD-30DDX-UL50E WOD, 30"H, DDX-UL50WOD-30DDX-UL50E		
MATERIAL: 16GA CRS PER ASTM B209-04	SIZE: D	Cage Code: 385Y5	DWG. NO.: 02054 REV: A
PAINT: DIAMOND VOGEL, BRIGHT GLOSS TEXTURE #14920	SCALE: 1:12	WEIGHT: 144 lbs.	SHEET 1 OF 3
DO NOT SCALE DRAWING			

DDB FORM 7.1-REV.K 08/03/17

UNCLASSIFIED PUBLIC

File Location: (DDB)(EPDM Vault)
C:\DDB\DR Requests\Customers\DDB WEB DWG\WOD Family UL50 WEB\WOD-30DDX-UL50

WEB DRAWING (NOT FOR FABRICATION)

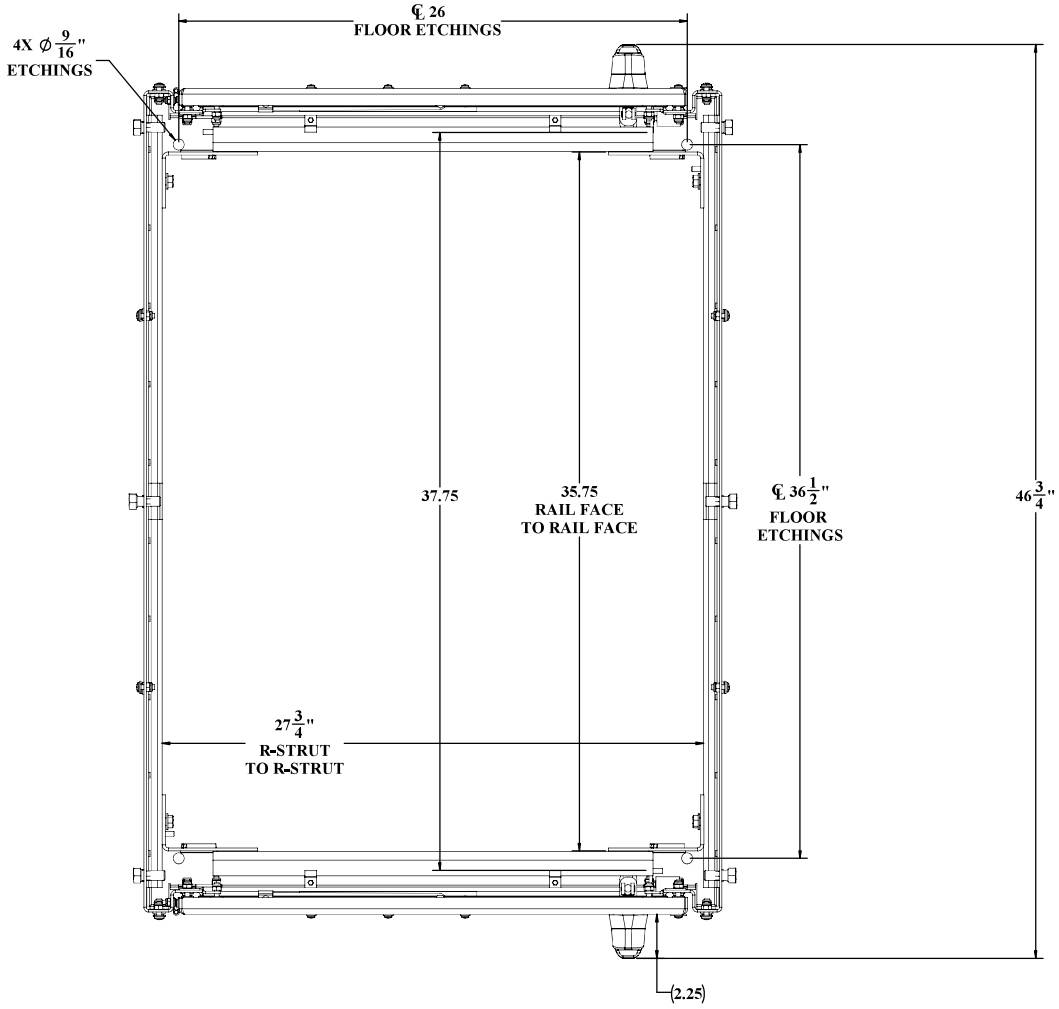

TOP VIEW
NO CEILLING OR ALUMASHIELD SHOWN

WEB DRAWING (NOT FOR FABRICATION)

UNLESS OTHERWISE SPECIFIED: DIMENSIONS ARE IN INCHES ANGULAR: FRACTIONAL ± NO DECIMAL: TWO PLACE DECIMAL: THREE PLACE DECIMAL: ALL HOLES ⌀	DDB Unlimited Inc. DDX-UL50E-CLOSED WOD, CLOSED, DDX-UL50DDX-UL50E-CLOSED
MATERIAL: 5052-H32-0.125 ASTM B209-04	SIZE D · Cage Code: 3S5Y5 · DWG. NO.: 02054 · REV A
PAINT: DIAMOND VOGEL, BEIGE GLOSS TEXTURE 874920	SCALE: 1:12 · WEIGHT: 109 lbs. · SHEET 2 OF 3
DO NOT SCALE DRAWING	

DDB FORM 7.1-REV K 08/02/17

UNCLASSIFIED PUBLIC

File Location: (DDB) (EPDM Vault)
C:\DDB\DR Requests\Customers\DDB WEB DWG\WOD Family UL50 WEB\WOD-30DDX-UL50

WEB DRAWING (NOT FOR FABRICATION)

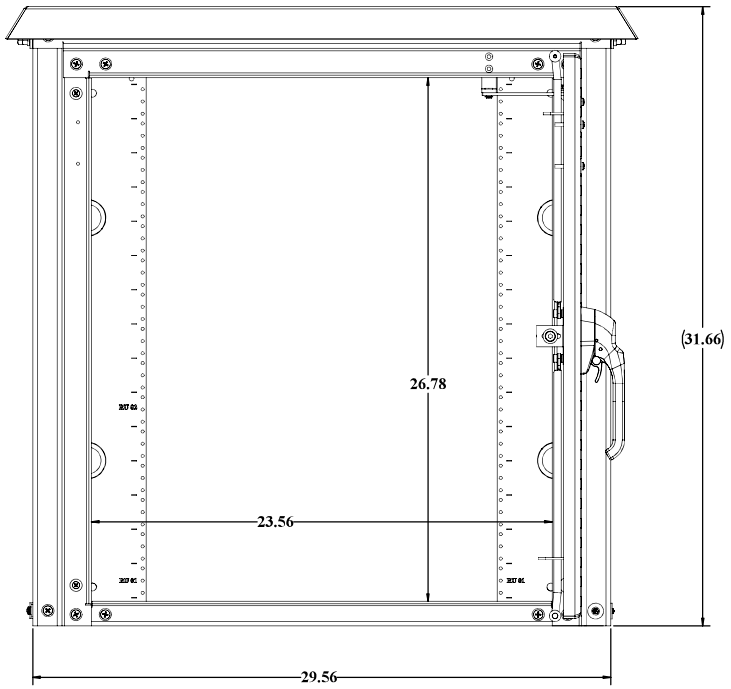

BACK VIEW
GASKET NOT SHOWN

WEB DRAWING (NOT FOR FABRICATION)

UNLESS OTHERWISE SPECIFIED:	DDB Unlimited Inc.			
DIMENSIONS ARE IN INCHES ANGULAR: ±1° FRACTIONAL/NO DECIMAL: ±1/64 TWO PLACE DECIMAL: ±.010 THREE PLACE DECIMAL: ±.005 ALL HOLES ±.003Ø	WOD-30DDX-UL50E WOD, 30"H, DDX-UL50WOD-30DDX-UL50E			
	SIZE	Cage Code:	DWG. NO.:	REV
MATERIAL: 5052-H32-0.125 ASTM B209-04	D	3S5Y5	02054	A
PAINT: DIAMOND VOGEL, BEIGE GLOSS TEXTURE #14920	SCALE: 1:12	WEIGHT: 144 lbs.		SHEET 3 OF 3
DO NOT SCALE DRAWING				

DDB FORM 7.1-REV.K 08/03/17

UNCLASSIFIED PUBLIC

File Location: (DDB)(EPDM Vault)
C:\DDB\DR Requests\Customers\DDB WEB DWG\WOD Family UL50 WEB\WOD-30DDX-UL50

An ISO 9001 Certified company

UL-50 WOD SERIES

WOD-50DXC-UL50

Made in America

Believing in American Craftsmanship

15 YEAR WARRANTY

Why Choose the WOD-UL Series?



The WOD-50DXC-UL50 enclosure is the pinnacle of enclosures. With a fully welded chassis, heavy duty vulcanized gasketing and years of design and engineering behind it, you will find this will meet the most stringent requirements of the UL-50E Type 4 listing. Fully tested by a third party Nationally Recognized Testing Laboratory and listed to the UL-50E standard, you can trust that the WOD UL series will pass any test or inspection it faces. Designed with public safety requirements in mind, these units can be place in mission critical locations where communication or sensitive gear needs to be protected regardless of the situation. As with the standard WOD series, the WOD-UL series comes with standard 3-point locking, front and rear access with integrated wind locks, top mounted solar shield, adjustable R-strut racking, reversible 19" or 23" EIA racking, Alumiflex construction and our unmatched 15-year warranty. Moreover, there is an extensive list of optional accessories including HVAC units, electrical panels, and cable entry solutions to name a few. No matter the application, DDB provides cutting-edge design, competitive pricing, benchmark lead times, and guaranteed delivery. Whether you require a custom enclosure or something from our substantial stock, our professional staff is here to help you today.

Application Types

Telecommunications
Wireless/Broadband
Fiber Optics
Back Haul
Public Safety
DAS
Utility
Base Station
Military
Trailer-Based Communications
Wi-Fi
LTEE/4G/5G



Environmental & Safety Ratings:

- ✓ ETL environmentally listed to UL 50/50E, IP 66, Type 4
- ✓ ETL listed; Safety Requirements, UL 62368-1:2019 Ed.3, CSA C22.2

Features

15 Year Warranty
0.125" Aluminum Construction
3-Point Locking System
Heavy Duty Out-Door Construction
Front and Rear Access
Stainless Steel External Hardware/Hinge
Cream Powder-Coat, Standard
Wind Locks
Quick Shipping

Weight and Dimensions

Approximate Exterior Enclosure Dimensions:
51"H x 33"W x 30"D
Shipping Dimensions:
42"D x 32"W x 62"H- Palletized
Approximate Shipping Weight:
183 lbs.

2301 S. HWY 77 Pauls Valley, OK 73075
T: (405)-665-2876
sales@ddbunlimited.com www.ddbunlimited.com

DDB UNLIMITED®

An ISO 9001 Certified company

UL-50 WOD SERIES

WOD-50DXC-UL50

Made in America

Believing in American Craftsmanship

15 YEAR WARRANTY



Features

1. Alumishield
2. Wind Locks
3. 19” and 23" Adjustable Racking Rails
4. Stainless Steel Door Hinge
5. 3-Point Locking System
6. Heavy Duty 0.160" Doors
7. Powder-Coat Cream
8. Rear Door Access

2301 S. HWY 77 Pauls Valley, OK 73075
T: (405)-665-2876
sales@ddbunlimited.com www.ddbunlimited.com

Scan this code for Climate Control

Scan this code for Accessories

REVISIONS		
REV.	DESCRIPTION	DATE
A	CREATED DRAWING PER DR-02055	7/16/2019

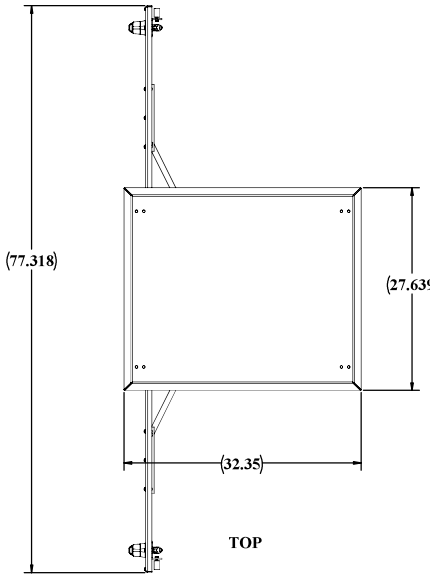

TOP

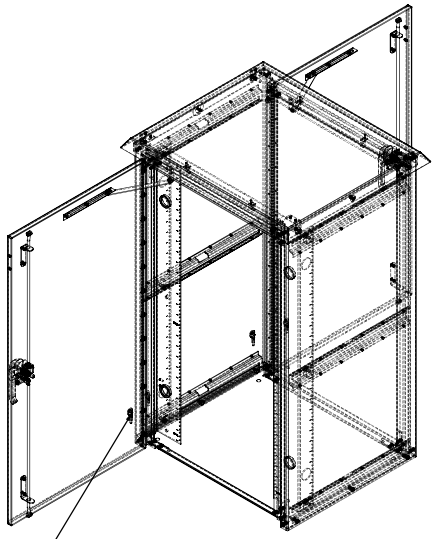

GROUNDING STUDS

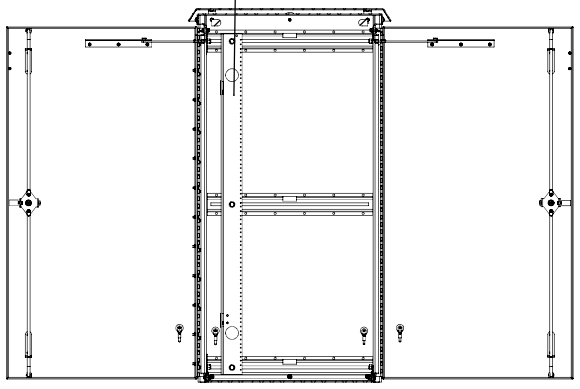

SECTION A-A
SCALE 1 : 8

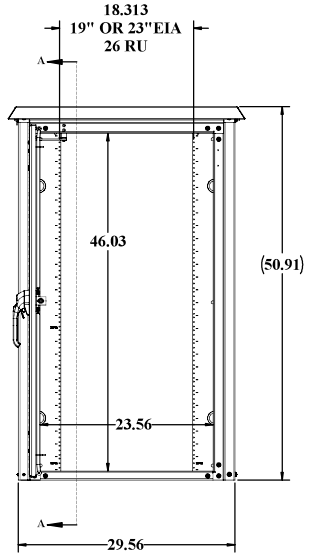

FRONT

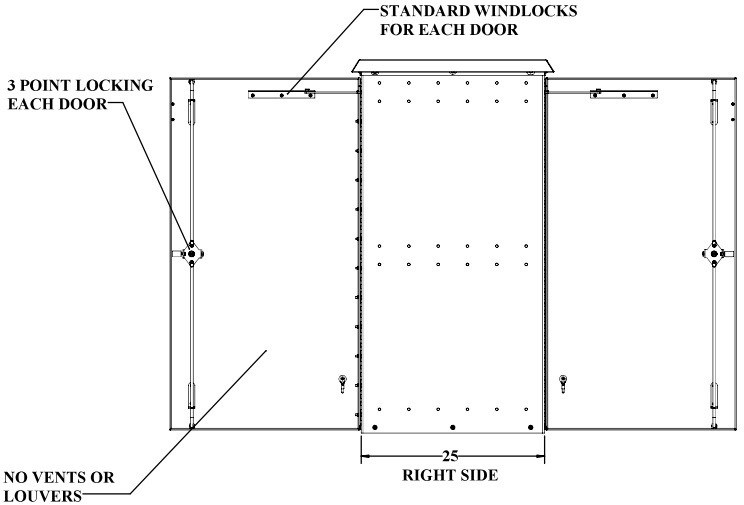

RIGHT SIDE

UNLESS OTHERWISE SPECIFIED:	DDB Unlimited Inc.			
DIMENSIONS ARE IN INCHES ANGULAR: ±1° FRACTIONAL: ±1/32 TWO PLACE DECIMAL: ±.010 THREE PLACE DECIMAL: ±.005 ALL EDGES ⌀.005Ⓜ	WOD-50DX-UL50E WOD-50DX-UL50W OD-50DX-UL50E			
	SIZE	Cage Code:	DWG. NO.:	REV
	D	3S5Y5	02055	A
MATERIAL: 5052-H32 0.125 ASTM B209-04	SCALE: 1:12	WEIGHT: 143 lbs.	SHEET 1 OF 3	
PAINT: DIAMOND VOGEL, BEIGE GLOSS TEXTURE 874920				
DO NOT SCALE DRAWING				

DDB FORM 7.1-REV K 08/03/17

UNCLASSIFIED PUBLIC

File Location: (DDB)(EPDM Vault)
C:\DDB\DR Requests\Customers\DDB WEB DWG\WOD Family UL50 WEB\WOD-50DX-UL50 WEB\

WEB DRAWING (NOT FOR FABRICATION)

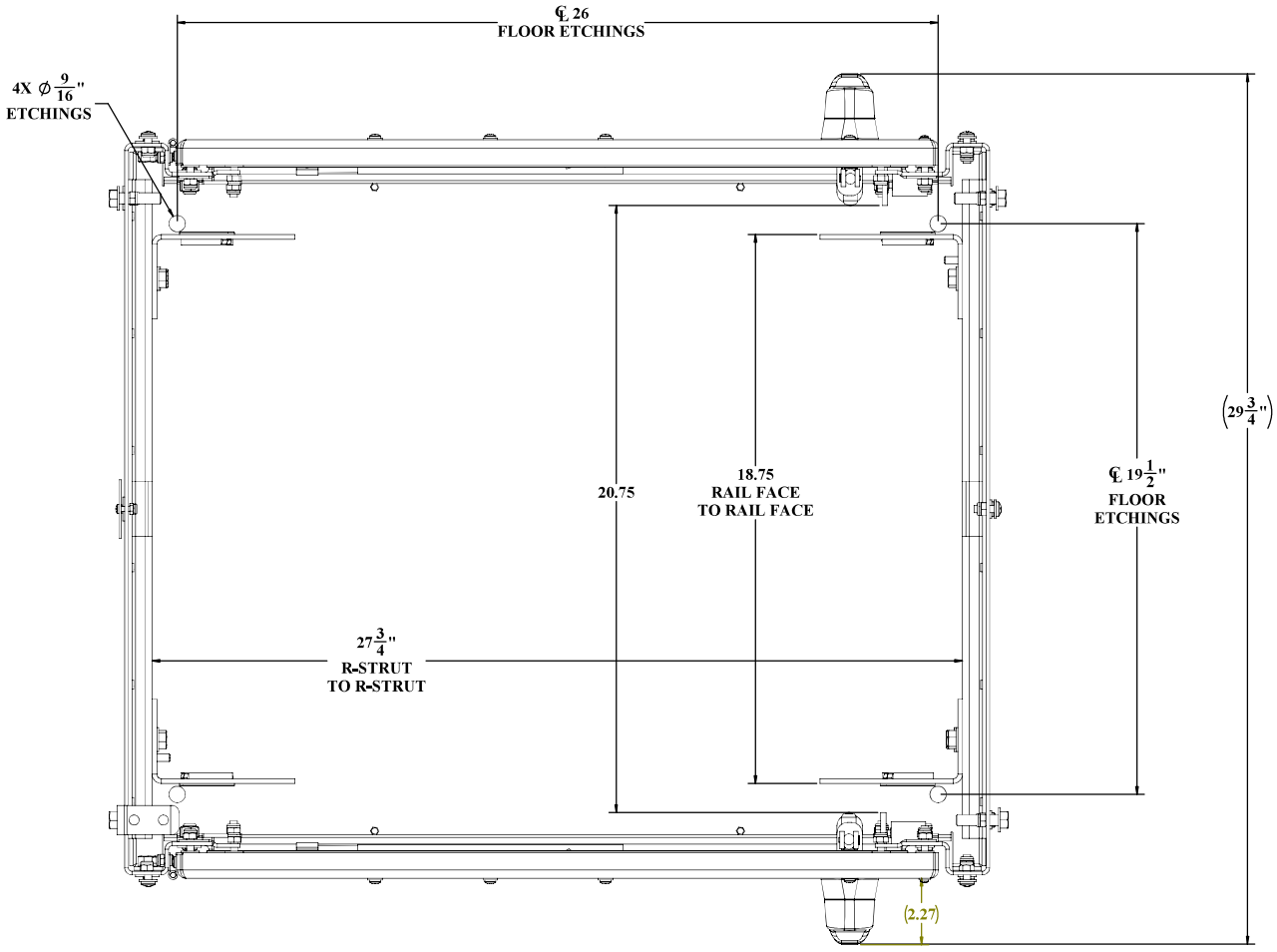

TOP VIEW
NO CEILING OR ALUMASHIELD SHOWN

WEB DRAWING (NOT FOR FABRICATION)

UNLESS OTHERWISE SPECIFIED:	*DDB Unlimited Inc.*		
DIMENSIONS ARE IN INCHES	DX-UL50E-CLOSED		
ANGULAR: FRACTIONAL ±1/64 TWO PLACE DECIMAL ±.010 THREE PLACE DECIMAL ±.005	WOD, CLOSED, DX-UL50DX-UL50E-CLOSED		
ALL HOLES ⌀.xxx±.003	SIZE: D	Cage Code: 385Y5	DWG. NO.: 02055 REV: A
MATERIAL: 5052-H32-0.125 ASTM B209-04	SCALE: 1:12	WEIGHT: 77 lbs.	SHEET 2 OF 3
PAINT: DIAMOND VOGEL, BEIGE GLOSS TEXTURE 874920			
DO NOT SCALE DRAWING			

DDB FORM 7.1-REV.K 08/02/17

UNCLASSIFIED PUBLIC

File Location: (DDB)(EPDM Vault)
C:\DDB\DR Requests\Customers\DDB WEB DWG\WOD Family UL50 WEB\WOD-50DX-UL50 WEB\

WEB DRAWING (NOT FOR FABRICATION)

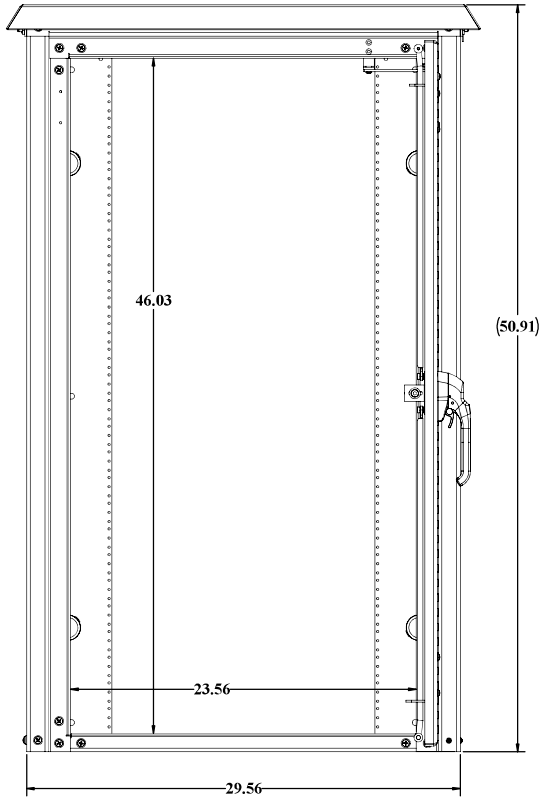

BACK VIEW
GASKET NOT SHOWN

WEB DRAWING (NOT FOR FABRICATION)

UNLESS OTHERWISE SPECIFIED:	DDB Unlimited Inc.			
DIMENSIONS ARE IN INCHES ANGULAR: ±1° FRACTIONAL: ±1/64 TWO PLACE DECIMAL: ±.010 THREE PLACE DECIMAL: ±.005 ALL EDGES ▲ ±.005	WOD-50DX-UL50E WOD-50DX-UL50W OD-50DX-UL50E			
	SIZE	Cage Code:	DWG. NO.:	REV
MATERIAL: 5052-H32-0.125 ASTM B209-04	D	3S5Y5	02055	A
PAINT: DIAMOND VOGEL, BEIGE GLOSS TEXTURE 874920	SCALE: 1:12	WEIGHT: 143 lbs.		SHEET 3 OF 3
DO NOT SCALE DRAWING				

DDB FORM 7.1-REV.K 08/03/17

UNCLASSIFIED PUBLIC

File Location: (DDB)(EPDM Vault)
C:\DDB\DR Requests\Customers\DDB WEB DWG\WOD Family UL50 WEB\WOD-50DX-UL50 WEB\

An ISO 9001 Certified company

UL-50 WOD SERIES

WOD-50DDC-UL50

Made in America

Believing in American Craftsmanship

15 YEAR WARRANTY

Why Choose the WOD-UL Series?



The WOD-50DDC-UL50 enclosure is the pinnacle of enclosures. With a fully welded chassis, heavy duty vulcanized gasketing and years of design and engineering behind it, you will find this will meet the most stringent requirements of the UL-50E Type 4 listing. Fully tested by a third party Nationally Recognized Testing Laboratory and listed to the UL-50E standard, you can trust that the WOD UL series will pass any test or inspection it faces. Designed with public safety requirements in mind, these units can be place in mission critical locations where communication or sensitive gear needs to be protected regardless of the situation. As with the standard WOD series, the WOD-UL series comes with standard 3-point locking, front and rear access with integrated wind locks, top mounted solar shield, adjustable R-strut racking, reversible 19" or 23" EIA racking, Alumiflex construction and our unmatched 15-year warranty. Moreover, there is an extensive list of optional accessories including HVAC units, electrical panels, and cable entry solutions to name a few. No matter the application, DDB provides cutting-edge design, competitive pricing, benchmark lead times, and guaranteed delivery. Whether you require a custom enclosure or something from our substantial stock, our professional staff is here to help you today.

Application Types

Telecommunications
Wireless/Broadband
Fiber Optics
Back Haul
Public Safety
DAS
Utility
Base Station
Military
Trailer-Based Communications
Wi-Fi
LTEE/4G/5G



Environmental & Safety Ratings:

- ✓ ETL environmentally listed to UL 50/50E, IP 66, Type 4
- ✓ ETL listed; Safety Requirements, UL 62368-1:2019 Ed.3, CSA C22.2

Features

15 Year Warranty
0.125" Aluminum Construction
3-Point Locking System
Heavy Duty Out-Door Construction
Front and Rear Access
Stainless Steel External Hardware/Hinge
Cream Powder-Coat, Standard
Wind Locks
Quick Shipping

Weight and Dimensions

Approximate Exterior Enclosure Dimensions:
51"H x 33"W x 39"D
Shipping Dimensions:
42"D x 42"W x 60"H- Palletized Approximate
Shipping Weight:
224 lbs.

2301 S. HWY 77 Pauls Valley, OK 73075
T: (405)-665-2876
sales@ddbunlimited.com www.ddbunlimited.com

DDB UNLIMITED®

An ISO 9001 Certified company

UL-50 WOD SERIES

WOD-50DDC-UL50

Made in America

Believing in American Craftsmanship

15 YEAR WARRANTY



Features

1. Alumishield
2. Wind Locks
3. 19” and 23" Adjustable Racking Rails
4. 3-Point Locking System
5. Stainless Steel Door Hinge
6. Heavy Duty 0.160" Doors
7. Powder-Coat Cream
8. Rear Door Access

Scan this code for Climate Control

Scan this code for Accessories

2301 S. HWY 77 Pauls Valley, OK 73075
T: (405)-665-2876
sales@ddbunlimited.com www.ddbunlimited.com

REVISIONS		
REV.	DESCRIPTION	DATE
A	CREATED DRAWING PER DR-02056	7/18/2019

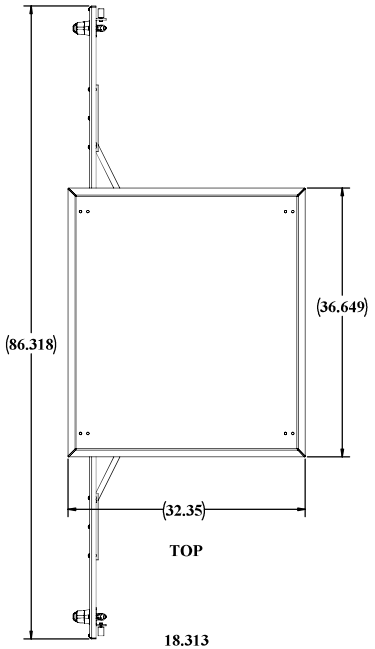

TOP

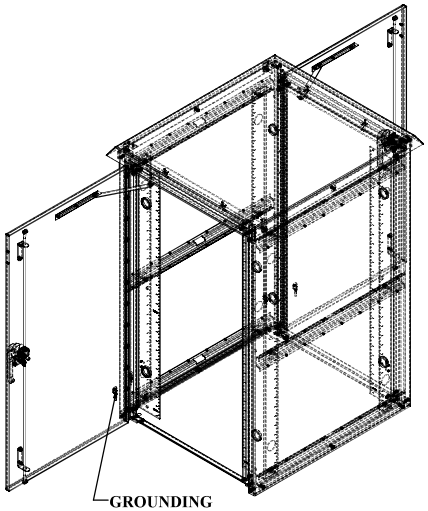

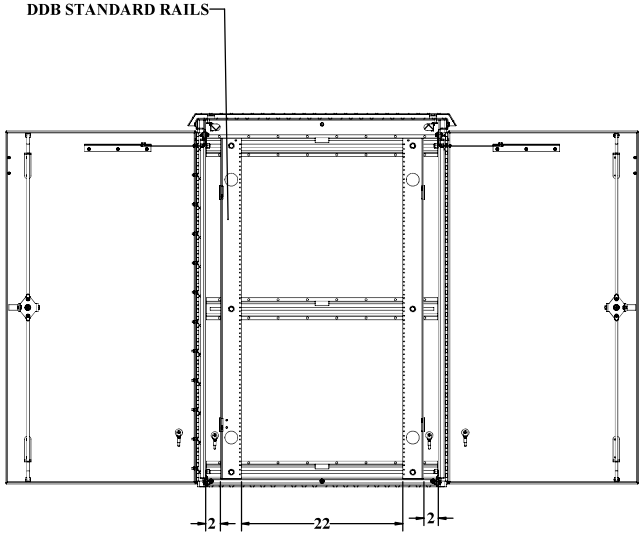

SECTION A-A
SCALE 1 : 8

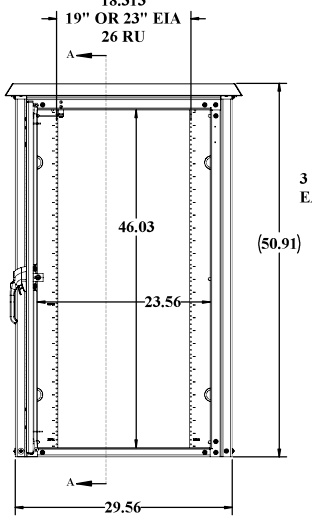

FRONT

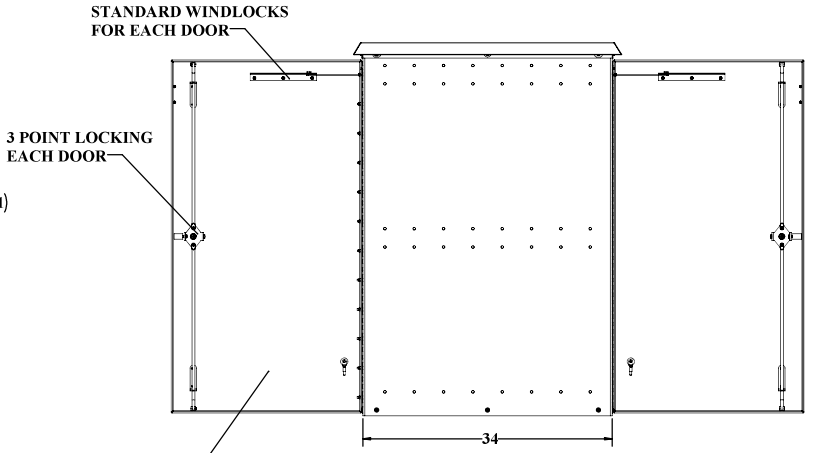

RIGHT SIDE

UNLESS OTHERWISE SPECIFIED:	DDB Unlimited Inc.			
DIMENSIONS ARE IN INCHES ANGULAR: FRACTIONAL ± TWO PLACE DECIMAL ± THREE PLACE DECIMAL ± ALL HOLES ⌀	WOD-50DD-UL50E WOD-50DD-UL50WOD-50DD-UL50E			
	SIZE	Cage Code:	DWG. NO.:	REV
	D	3S5Y5	02056	A
MATERIAL: 5052-H32 0.125 ASTM B209-04	SCALE: 1:12	WEIGHT: 177 lbs.	SHEET 1 OF 3	
PAINT: DIAMOND VOGEL, BEIGE GLOSS TEXTURE #34920				
DO NOT SCALE DRAWING				

DDB FORM 7.1-REV K 08/03/17

UNCLASSIFIED PUBLIC

File Location: (DDB)(EPDM Vault)
C:\DDB\DR Requests\Customers\DDB WEB DWG\WOD Family UL50 WEB\WOD-50DD-UL50 WEB\

WEB DRAWING (NOT FOR FABRICATION)

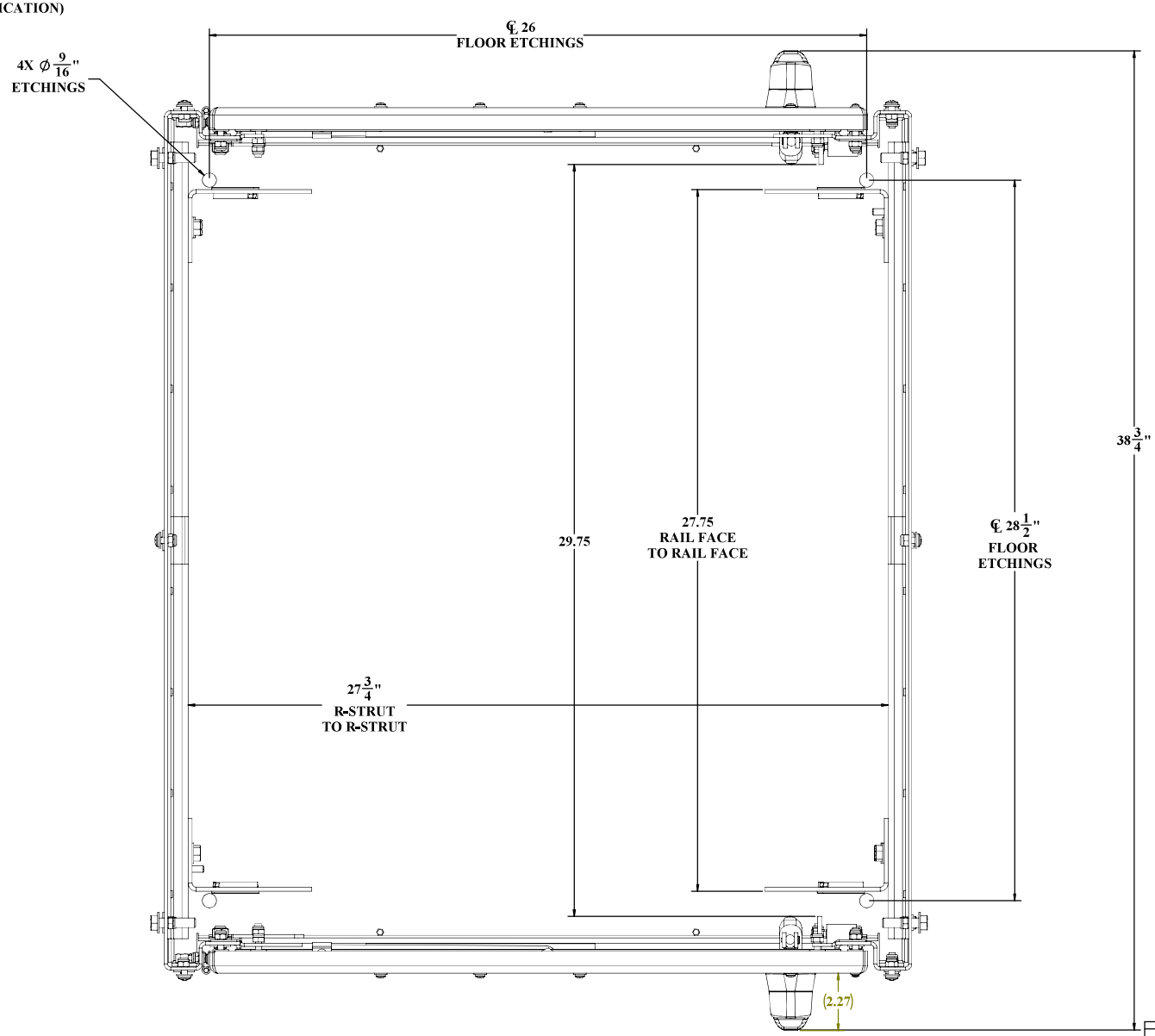

TOP VIEW
NO CEILING OR ALUMASHIELD SHOWN

WEB DRAWING (NOT FOR FABRICATION)

UNLESS OTHERWISE SPECIFIED:	DDB Unlimited Inc.
DIMENSIONS ARE IN INCHES	DD-UL50E-CLOSED
ANGULAR: FRACTIONAL ± / TWO PLACE DECIMAL: ± / THREE PLACE DECIMAL: ±	WOD, CLOSED , DD UL50DD-UL50E-CLOSED
MATERIAL: 5052-H32 0.125 ASTM B209-04	SIZE D · Cage Code: 3S5Y5 · DWG. NO.: 02056 · REV A
PAINT: DIAMOND VOGEL, BEIGE GLOSS TEXTURE 874920	SCALE: 1:12 · WEIGHT: 93 lbs. · SHEET 2 OF 3
DO NOT SCALE DRAWING	

DDB FORM 7.1-REV K 08/02/17

UNCLASSIFIED PUBLIC

File Location: (DDB)(EPDM Vault)
C:\DDB\DR Requests\Customers\DDB WEB DWG\WOD Family UL50 WEB\WOD-50DD-UL50 WEB\

WEB DRAWING (NOT FOR FABRICATION)`

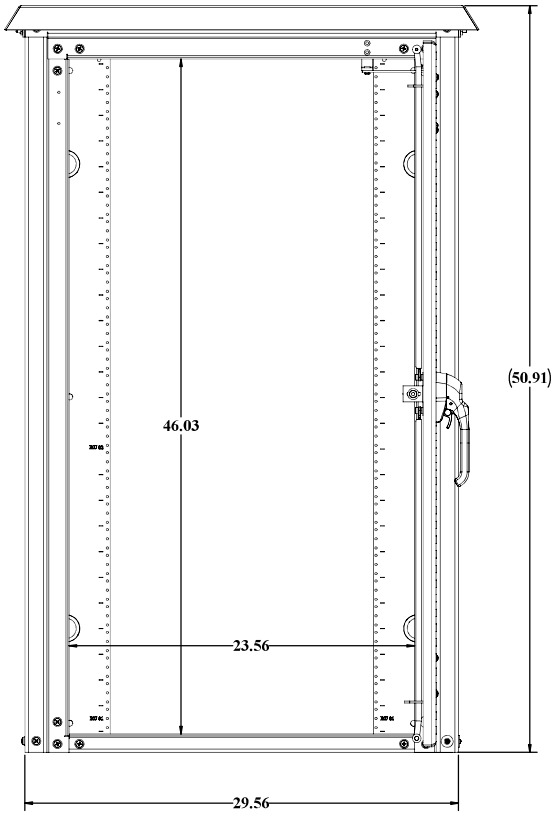

BACK VIEW
GASKET NOT SHOWN

WEB DRAWING (NOT FOR FABRICATION)

UNLESS OTHERWISE SPECIFIED:	***DDB Unlimited Inc.***
DIMENSIONS ARE IN INCHES ANGULAR: ±1° FRACTIONAL: ±1/64 TWO PLACE DECIMAL: ±.010 THREE PLACE DECIMAL: ±.005 ALL EDGES ◉	WOD-50DD-UL50E WOD-50DD-UL50WOD-50DD-UL50E
SIZE: D	Cage Code: 385Y5 — DWG. NO.: 02056 — REV: A
MATERIAL: 5052-H32-0.125 ASTM B209-04	
PAINT: DIAMOND VOGEL, BEIGE GLOSS TEXTURE 874920	
DO NOT SCALE DRAWING	SCALE: 1:12 — WEIGHT: 177 lbs. — SHEET 3 OF 3

DDB FORM 7.1-REV.K 08/03/17

UNCLASSIFIED PUBLIC

File Location: (DDB)(EPDM Vault)
C:\DDB\DR Requests\Customers\DDB WEB DWG\WOD Family UL50 WEB\WOD-50DD-UL50 WEB\

An ISO 9001 Certified company

UL-50 WOD SERIES

WOD-50DDXC-UL50

Made in America

Believing in American Craftsmanship

15 YEAR WARRANTY

Why Choose the WOD-UL Series?



The WOD-50DDXC-UL50 enclosure is the pinnacle of enclosures. With a fully welded chassis, heavy duty vulcanized gasketing and years of design and engineering behind it, you will find this will meet the most stringent requirements of the UL-50E Type 4 listing. Fully tested by a third party Nationally Recognized Testing Laboratory and listed to the UL-50E standard, you can trust that the WOD UL series will pass any test or inspection it faces. Designed with public safety requirements in mind, these units can be place in mission critical locations where communication or sensitive gear needs to be protected regardless of the situation. As with the standard WOD series, the WOD-UL series comes with standard 3-point locking, front and rear access with integrated wind locks, top mounted solar shield, adjustable R-strut racking, reversible 19" or 23" EIA racking, Alumiflex construction and our unmatched 15-year warranty. Moreover, there is an extensive list of optional accessories including HVAC units, electrical panels, and cable entry solutions to name a few. No matter the application, DDB provides cutting-edge design, competitive pricing, benchmark lead times, and guaranteed delivery. Whether you require a custom enclosure or something from our substantial stock, our professional staff is here to help you today.

Application Types

Telecommunications
Wireless/Broadband
Fiber Optics
Back Haul
Public Safety
DAS
Utility
Base Station
Military
Trailer-Based Communications
Wi-Fi
LTEE/4G/5G



Environmental & Safety Ratings:

- ✓ ETL environmentally listed to UL 50/50E, IP 66, Type 4
- ✓ ETL listed; Safety Requirements, UL 62368-1:2019 Ed.3, CSA C22.2

Features

15 Year Warranty
0.125" Aluminum Construction
3-Point Locking System
Heavy Duty Out-Door Construction
Front and Rear Access
Stainless Steel External Hardware/Hinge
Cream Powder-Coat, Standard
Wind Locks
Quick Shipping

Weight and Dimensions

Approximate Exterior Enclosure Dimensions:
51"H x 33"W x 30"D
Shipping Dimensions:
42"D x 52"W x 62"H- Palletized Approximate
Shipping Weight:
253 lbs.

2301 S. HWY 77 Pauls Valley, OK 73075
T: (405)-665-2876
sales@ddbunlimited.com www.ddbunlimited.com

An ISO 9001
Certified company

UL-50 WOD SERIES

WOD-50DDXC-UL50

Made in America

Believing in American
Craftsmanship

15 YEAR WARRANTY



Features

1. Alumishield
2. Wind Locks
3. 19” and 23" Adjustable Racking Rails
4. Stainless Steel Door Hinge
5. 3-Point Locking System
6. Heavy Duty 0.160" Doors
7. Powder-Coat Cream
8. Rear Door Access

2301 S. HWY 77 Pauls Valley, OK 73075
T: (405)-665-2876
sales@ddbunlimited.com www.ddbunlimited.com

Scan this code for
Climate Control

Scan this code for
Accessories

REVISIONS		
REV.	DESCRIPTION	DATE
A	CREATED DRAWING PER DR-02057	7/18/2019

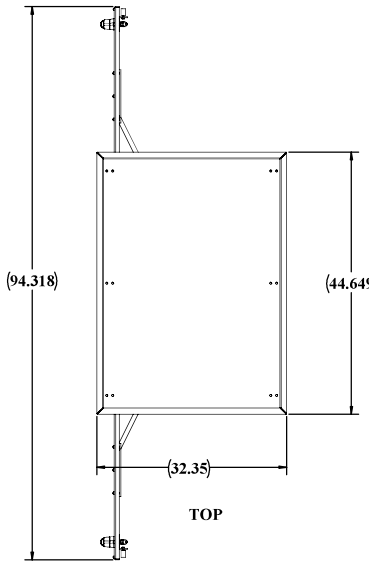

TOP

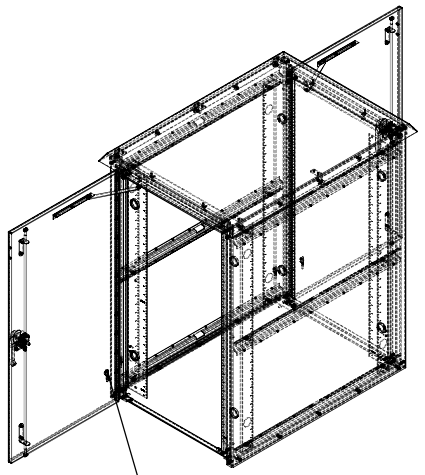

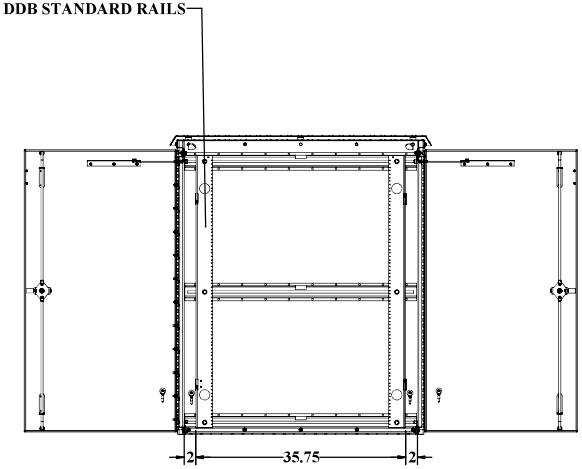

SECTION A-A
SCALE 1 : 10

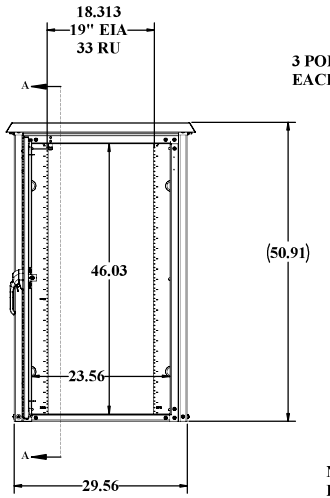

FRONT

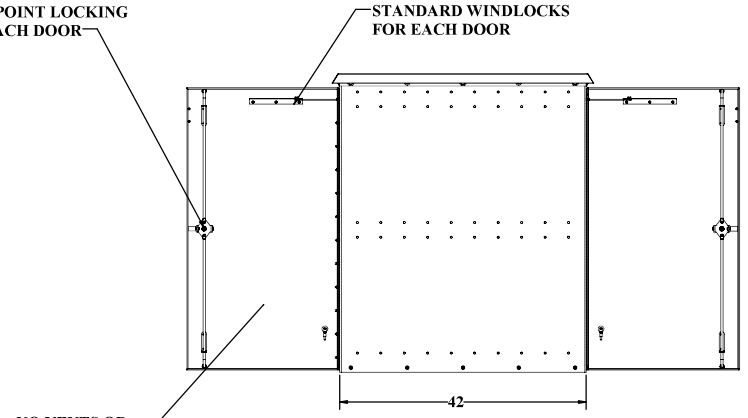

RIGHT SIDE

UNLESS OTHERWISE SPECIFIED:	DDB Unlimited Inc.		
DIMENSIONS ARE IN INCHES ANGULAR: FRACTIONAL: NO DECIMAL: ±1/32 TWO PLACE DECIMAL: ±.010 THREE PLACE DECIMAL: ±.005 ALL HOLES ±.003	WOD-50DDX-UL50 WOD, 50"H, DDX-UL50WOD-50DDX-UL50		
	SIZE: D	Cage Code: 385Y5	DWG. NO.: 02057 REV: A
MATERIAL: 5052-H32-0.125 ASTM B209-04	SCALE: 1:12	WEIGHT: 199lbs.	SHEET 1 OF 3
PAINT: DIAMOND VOGEL, BEIGE GLOSS TEXTURE E14920			
DO NOT SCALE DRAWING			

DDB-DWG-7.1-REV K 08/03/17

UNCLASSIFIED PUBLIC

File Location: (DDB)(EPDM Vault)
C:\DDB\DR Requests\Customers\DDB WEB DWG\WOD Family UL50 WEB\WOD-50DDX-UL50

WEB DRAWING (NOT FOR FABRICATION)

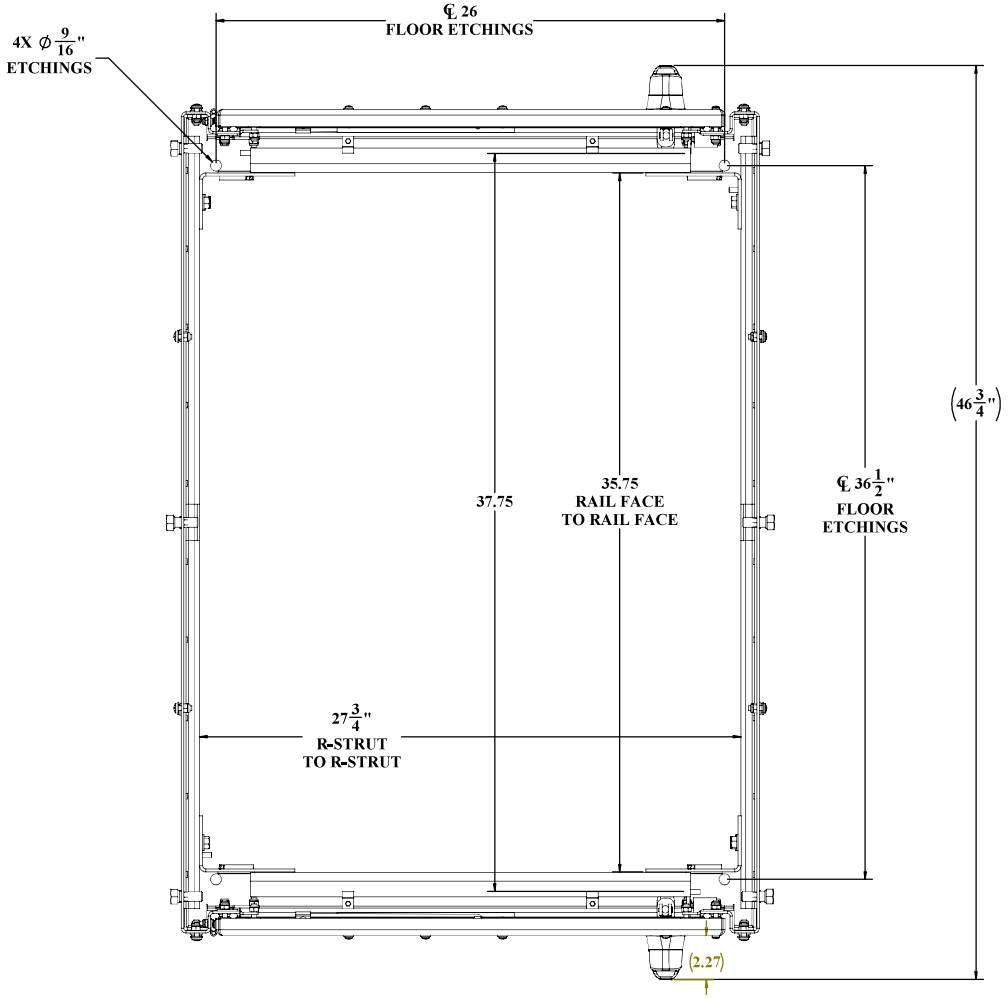

TOP VIEW
NO CEILING OR ALUMASHIELD SHOWN

WEB DRAWING (NOT FOR FABRICATION)

UNLESS OTHERWISE SPECIFIED: DIMENSIONS ARE IN INCHES. ANGULAR: FRACTIONAL ±1/64 DECIMAL: TWO PLACE DECIMAL: THREE PLACE DECIMAL: ALL EDGES ⌀125	*DDB Unlimited Inc.* DDX-UL50E-CLOSED WOD, CLOSED, DDX-UL50DDX-UL50E-CLOSED		
	SIZE: D	Cage Code: 385Y5	DWG. NO.: 02057 REV: A
MATERIAL: 5052-H32 0.125 ASTM B209-04	SCALE: 1:12	WEIGHT: 109 lbs.	SHEET 2 OF 3
PAINT: DIAMOND VOGEL, BEIGE GLOSS TEXTURE 874920			
DO NOT SCALE DRAWING			

DDB FORM 7.1-REV K 08/03/17

UNCLASSIFIED PUBLIC

File Location: (DDB) (EPDM Vault)
C:\DDB\DR Requests\Customers\DDB WEB DWG\WOD Family UL50 WEB\WOD-50DDX-UL50

WEB DRAWING (NOT FOR FABRICATION)

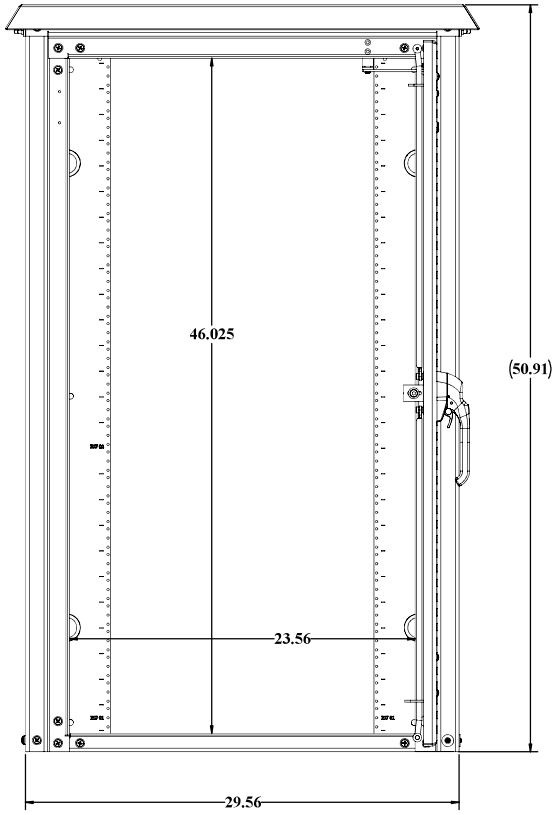

BACK VIEW
GASKET NOT SHOWN

WEB DRAWING (NOT FOR FABRICATION)

UNLESS OTHERWISE SPECIFIED:	DDB Unlimited Inc.			
DIMENSIONS ARE IN INCHES ANGULAR: ±1° FRACTIONAL/NO DECIMAL: ±1/16 TWO PLACE DECIMAL: ±.010 THREE PLACE DECIMAL: ±.005 ALL HOLES ±.003	WOD-50DDX-UL50 WOD, 50"H, DDX-UL50WOD-50DDX-UL50			
	SIZE	Cage Code:	DWG. NO.:	REV
MATERIAL: 5052-H32-0.125 ASTM B209-04	D	3S5Y5	02057	A
PAINT: DIAMOND VOGEL, RITE GLOSS TEXTURE #14920	SCALE: 1:12	WEIGHT: 199lbs.		SHEET 3 OF 3
DO NOT SCALE DRAWING				

UNCLASSIFIED PUBLIC

File Location: (DDB)(EPDM Vault)
C:\DDB\DR Requests\Customers\DDB WEB DWG\WOD Family UL50 WEB\WOD-50DDX-UL50

DDB FORM 7.1-REV.K 08/03/17

DDB UNLIMITED®

An ISO 9001 Certified company

UL-50 WOD SERIES

WOD-62DXC-UL50

Made in America

Believing in American Craftsmanship

15 YEAR WARRANTY

Why Choose the WOD-UL Series?



The WOD-62DXC-UL50 enclosure is the pinnacle of enclosures. With a fully welded chassis, heavy duty vulcanized gasketing and years of design and engineering behind it, you will find this will meet the most stringent requirements of the UL-50E Type 4 listing. Fully tested by a third party Nationally Recognized Testing Laboratory and listed to the UL-50E standard, you can trust that the WOD UL series will pass any test or inspection it faces. Designed with public safety requirements in mind, these units can be place in mission critical locations where communication or sensitive gear needs to be protected regardless of the situation. As with the standard WOD series, the WOD-UL series comes with standard 3-point locking, front and rear access with integrated wind locks, top mounted solar shield, adjustable R-strut racking, reversible 19" or 23" EIA racking, Alumiflex construction and our unmatched 15-year warranty. Moreover, there is an extensive list of optional accessories including HVAC units, electrical panels, and cable entry solutions to name a few. No matter the application, DDB provides cutting-edge design, competitive pricing, benchmark lead times, and guaranteed delivery. Whether you require a custom enclosure or something from our substantial stock, our professional staff is here to help you today.

Application Types

Telecommunications
Wireless/Broadband
Fiber Optics
Back Haul
Public Safety
DAS
Utility
Base Station
Military
Trailer-Based Communications
Wi-Fi
LTEE/4G/5G



Environmental & Safety Ratings:

- ✓ ETL environmentally listed to UL 50/50E, IP 66, Type 4
- ✓ ETL listed; Safety Requirements, UL 62368-1:2019 Ed.3, CSA C22.2

Features

15 Year Warranty
0.125" Aluminum Construction
3-Point Locking System
Heavy Duty Out-Door Construction
Front and Rear Access
Stainless Steel External Hardware/Hinge
Cream Powder-Coat, Standard
Wind Locks
Quick Shipping

Weight and Dimensions

Approximate Exterior Enclosure Dimensions:
64"H x 33"W x 30"D
Shipping Dimensions:
42"D x 32"W x 72"H- Palletized
Approximate Shipping Weight:
211 lbs.

2301 S. HWY 77 Pauls Valley, OK 73075
T: (405)-665-2876
sales@ddbunlimited.com www.ddbunlimited.com

UL-50 WOD SERIES

WOD-62DXC-UL50

An ISO 9001 Certified company

Made in America

Believing in American Craftsmanship

15 YEAR WARRANTY



Features

1. Alumishield
2. Wind Locks
3. 19” and 23" Adjustable Racking Rails
4. Stainless Steel Door Hinge
5. 3-Point Locking System
6. Heavy Duty 0.160" Doors
7. Powder-Coat Cream
8. Rear Door Access

2301 S. HWY 77 Pauls Valley, OK 73075
T: (405)-665-2876
sales@ddbunlimited.com www.ddbunlimited.com

Scan this code for Climate Control

Scan this code for Accessories

REVISIONS		
REV.	DESCRIPTION	DATE
A	CREATED DRAWING PER DR-02058	7/18/2019

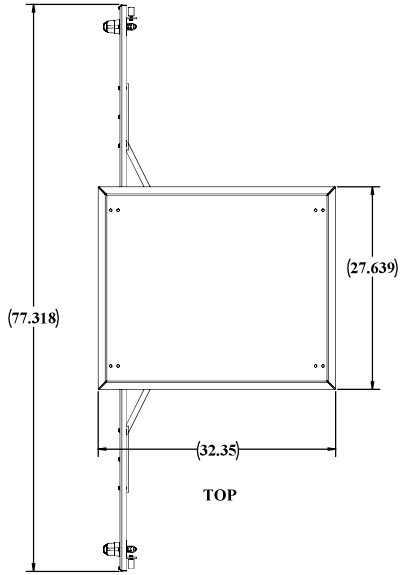

TOP

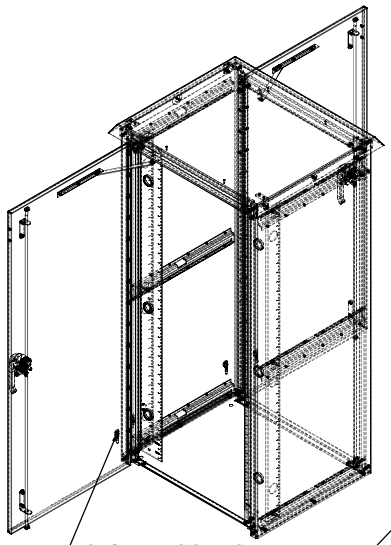

GROUNDING STUDS

STANDARD WINDLOCKS
FOR EACH DOOR

DDB STANDARD RAILS

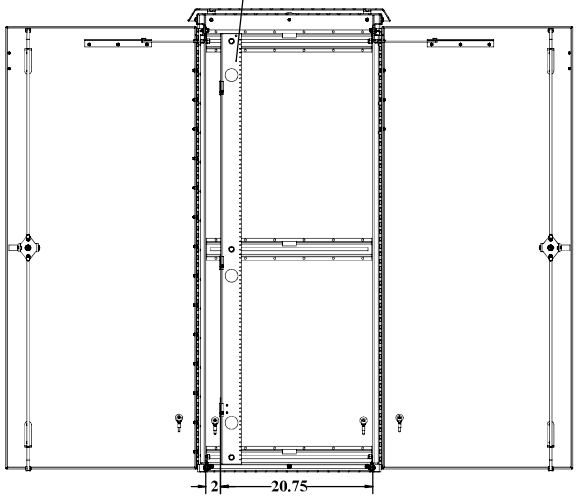

SECTION A-A
SCALE 1 : 8

18.313
19" OR 23"EIA
15 RU

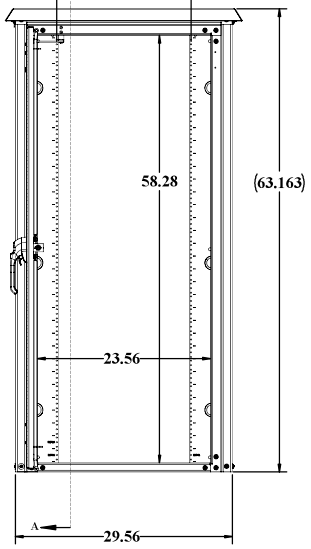

FRONT

3 POINT LOCKING
EACH DOOR

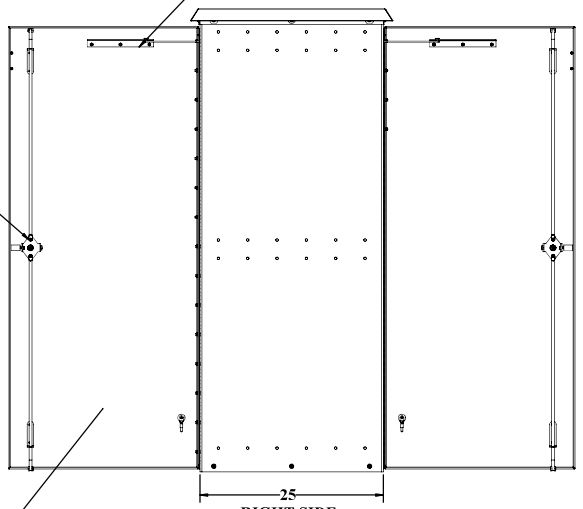

RIGHT SIDE

NO VENTS OR
LOUVERS

UNLESS OTHERWISE SPECIFIED:	DDB Unlimited Inc.			
DIMENSIONS ARE IN INCHES ANGULAR: ±1° FRACTIONAL: ±1/64 TWO PLACE DECIMAL: ±.010 TWO PLACE DECIMAL: ±.0050 THREE PLACE DECIMAL: ±.0010 ALL EDGES ◉ BREAK◉	WOD-62DX-UL50 WOD, 62"H, DX-UL50WOD-62DX-UL50			
	SIZE	Cage Code:	DWG. NO.:	REV
	D	3S5Y5	02058	A
MATERIAL: 5052-H32-0.125 ASTM B209-04	SCALE: 1:12	WEIGHT: 165 lbs.		SHEET 1 OF 3
PAINT: DIAMOND VOGEL, BEIGE GLOSS TEXTURE 874920				
DO NOT SCALE DRAWING				

UNCLASSIFIED PUBLIC

File Location: (DDB)(EPDM Vault)
C:\DDB\DR Requests\Customers\DDB WEB DWG\WOD Family UL50 WEB\WOD-62DX-UL50 WEB\

DDB-DRAW-7.1-REV K 08/03/17

WEB DRAWING (NOT FOR FABRICATION)

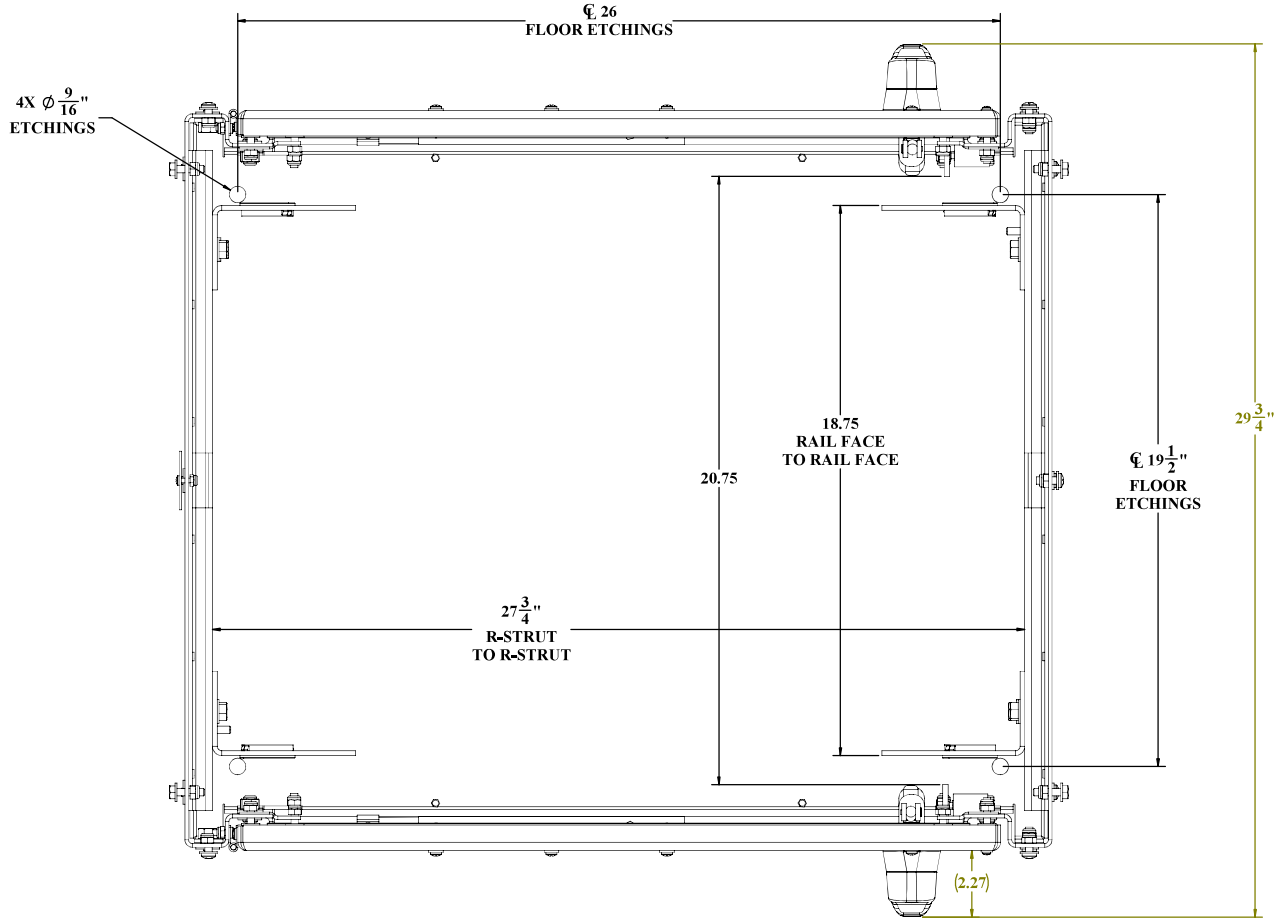

TOP VIEW
NO CEILING OR ALUMASHIELD SHOWN

WEB DRAWING (NOT FOR FABRICATION)

UNLESS OTHERWISE SPECIFIED:	DDB Unlimited Inc.		
DIMENSIONS ARE IN INCHES ANGULAR: ±1° FRACTIONAL: ±1/64 TWO PLACE DECIMAL: ±.010 THREE PLACE DECIMAL: ±.005 ALL EDGES ⌀.005Ⓜ	DX-UL50E-CLOSED WOD, CLOSED, DX-UL50DX-UL50E-CLOSED		
	SIZE: D	Cage Code: 385Y5	DWG. NO.: 02058 REV: A
MATERIAL: 5052-H32-0.125 ASTM B209-04			
PAINT: DIAMOND VOGEL, RIDGE GLOSS TEXTURE 874920	SCALE: 1:12	WEIGHT: 77 lbs.	SHEET 2 OF 3
DO NOT SCALE DRAWING			

DDB FORM 7.1-REV.K 08/02/17

UNCLASSIFIED PUBLIC

WEB DRAWING (NOT FOR FABRICATION)

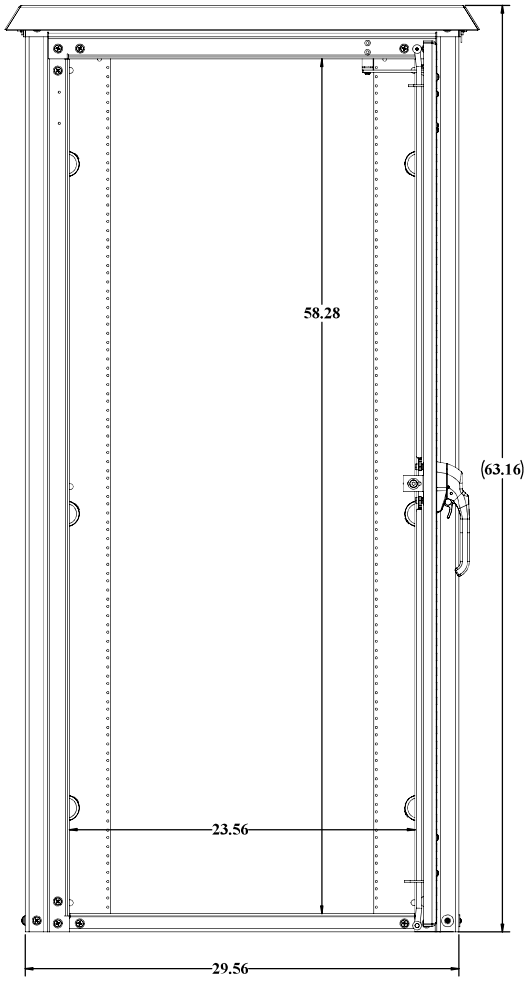

BACK VIEW
GASKET NOT SHOWN

UNLESS OTHERWISE SPECIFIED:	DDB Unlimited Inc.		
DIMENSIONS ARE IN INCHES ANGULAR: ±1° FRACTIONAL: ±1/32 TWO PLACE DECIMAL: ±.010 THREE PLACE DECIMAL: ±.005 ALL HOLES ±.003	WOD-62DX-UL50 WOD, 62"H, DX-UL50WOD-62DX-UL50		
	SIZE: D	Cage Code: 385Y5	DWG. NO.: 02058 REV: A
MATERIAL: 5052-H32-0.125 ASTM B209-04			
PAINT: DIAMOND VOGEL, BEIGE GLOSS TEXTURE #14920			
DO NOT SCALE DRAWING	SCALE: 1:12	WEIGHT: 166 lbs.	SHEET 3 OF 3

UNCLASSIFIED PUBLIC

File Location: (DDB)(EPDM Vault)
C:\DDB\DR Requests\Customers\DDB WEB DWG\WOD Family UL50 WEB\WOD-62DX-UL50 WEB\

DDB FORM 7.1-REV.K 08/02/17

DDB UNLIMITED®

An ISO 9001 Certified company

UL-50 WOD SERIES

WOD-62DDC-UL50

Made in America

Believing in American Craftsmanship

15 YEAR WARRANTY

Why Choose the WOD-UL Series?



The WOD-62DDC-UL50 enclosure is the pinnacle of enclosures. With a fully welded chassis, heavy duty vulcanized gasketing and years of design and engineering behind it, you will find this will meet the most stringent requirements of the UL-50E Type 4 listing. Fully tested by a third party Nationally Recognized Testing Laboratory and listed to the UL-50E standard, you can trust that the WOD UL series will pass any test or inspection it faces. Designed with public safety requirements in mind, these units can be place in mission critical locations where communication or sensitive gear needs to be protected regardless of the situation. As with the standard WOD series, the WOD-UL series comes with standard 3-point locking, front and rear access with integrated wind locks, top mounted solar shield, adjustable R-strut racking, reversible 19” or 23” EIA racking, Alumiflex construction and our unmatched 15-year warranty. Moreover, there is an extensive list of optional accessories including HVAC units, electrical panels, and cable entry solutions to name a few. No matter the application, DDB provides cutting-edge design, competitive pricing, benchmark lead times, and guaranteed delivery. Whether you require a custom enclosure or something from our substantial stock, our professional staff is here to help you today.

Features

15 Year Warranty

0.125" Aluminum Construction

3-Point Locking System

Heavy Duty Out-Door Construction

Front and Rear Access

Stainless Steel External Hardware/Hinge

Cream Powder-Coat, Standard

Wind Locks

Quick Shipping

Application Types

Telecommunications
Wireless/Broadband
Fiber Optics
Back Haul
Public Safety
DAS
Utility
Base Station
Military
Trailer-Based Communications
Wi-Fi
LTEE/4G/5G



Environmental & Safety Ratings:

- ✓ ETL environmentally listed to UL 50/50E, IP 66, Type 4
- ✓ ETL listed; Safety Requirements, UL 62368-1:2019 Ed.3, CSA C22.2

Weight and Dimensions

Approximate Exterior Enclosure Dimensions:

64”H x 33”W x 39”D

Shipping Dimensions:

42”D x 42”W x 72”H- Palletized

Approximate Shipping Weight:

254 lbs.

2301 S. HWY 77 Pauls Valley, OK 73075
T: (405)-665-2876
sales@ddbunlimited.com www.ddbunlimited.com

DDB UNLIMITED®

An ISO 9001 Certified company

UL-50 WOD SERIES

WOD-62DDC-UL50

Made in America

Believing in American Craftsmanship

15 YEAR WARRANTY

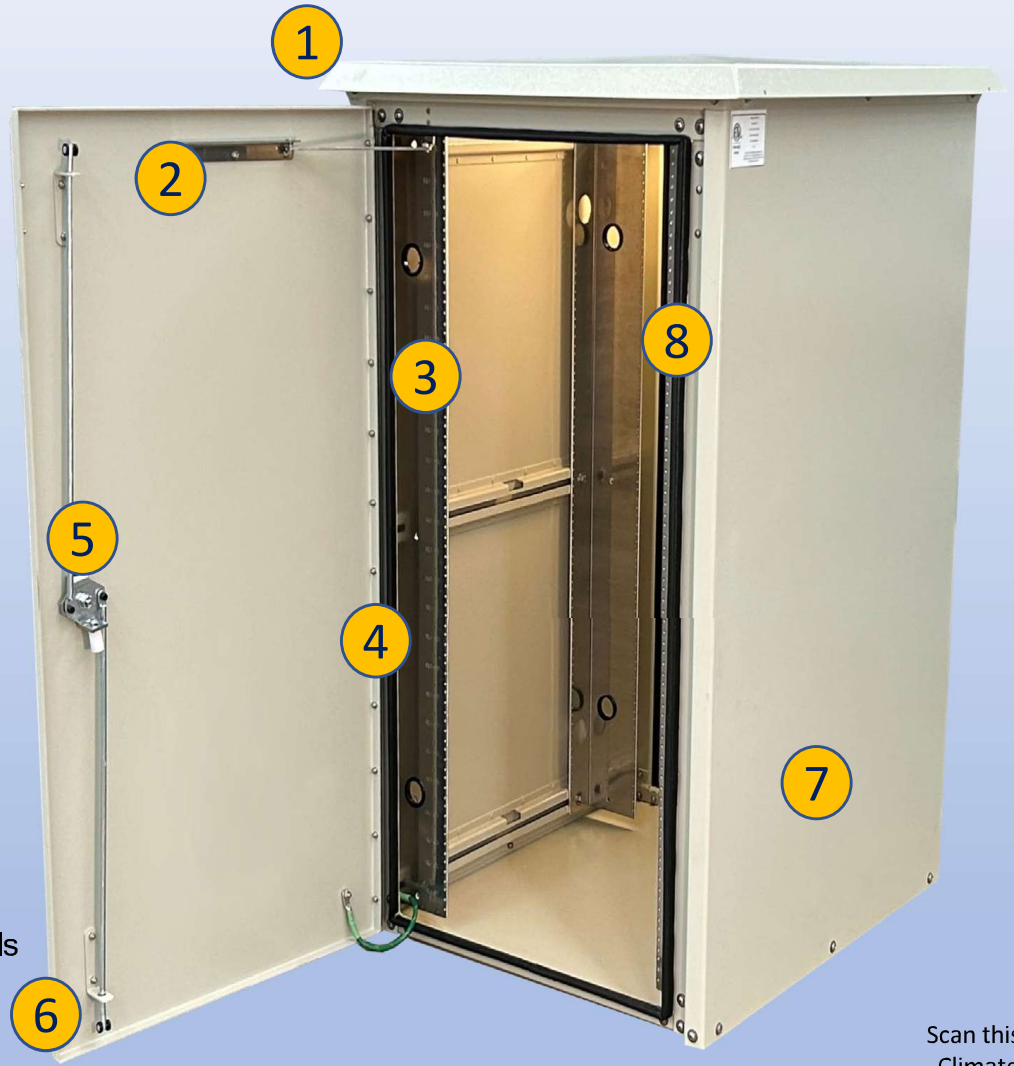

Features

1. Alumishield
2. Wind Locks
3. 19” and 23" Adjustable Racking Rails
4. Stainless Steel Door Hinge
5. 3-Point Locking System
6. Heavy Duty 0.160" Doors
7. Powder-Coat Cream
8. Rear Door Access

Scan this code for Climate Control

Scan this code for Accessories

2301 S. HWY 77 Pauls Valley, OK 73075
T: (405)-665-2876
sales@ddbunlimited.com www.ddbunlimited.com

REVISIONS		
REV.	DESCRIPTION	DATE
A	CREATED DRAWING PER DR-02059	7/17/2019

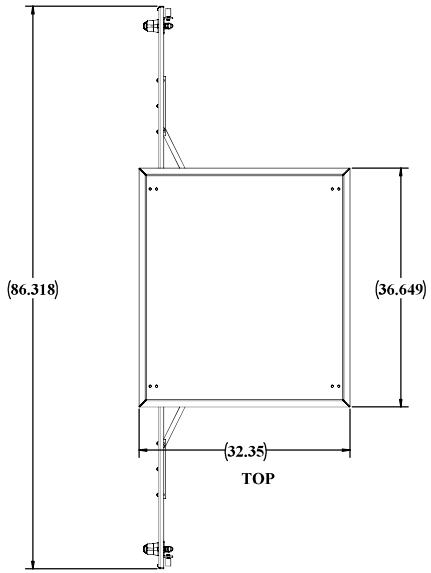

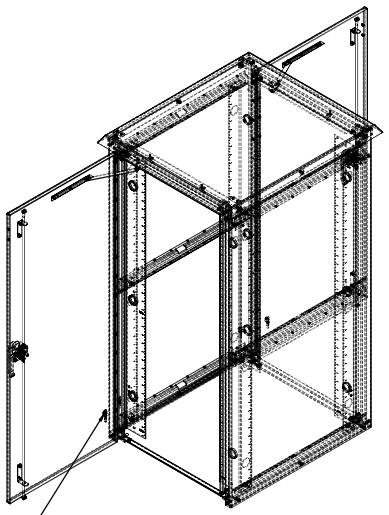

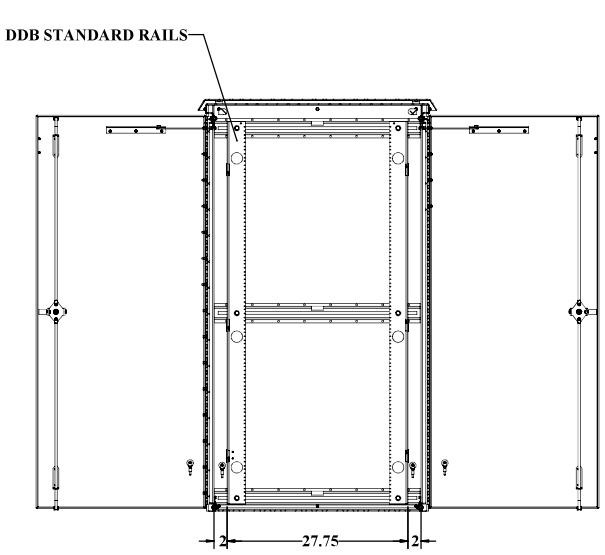

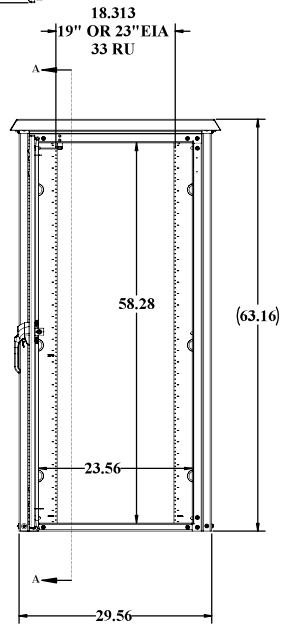

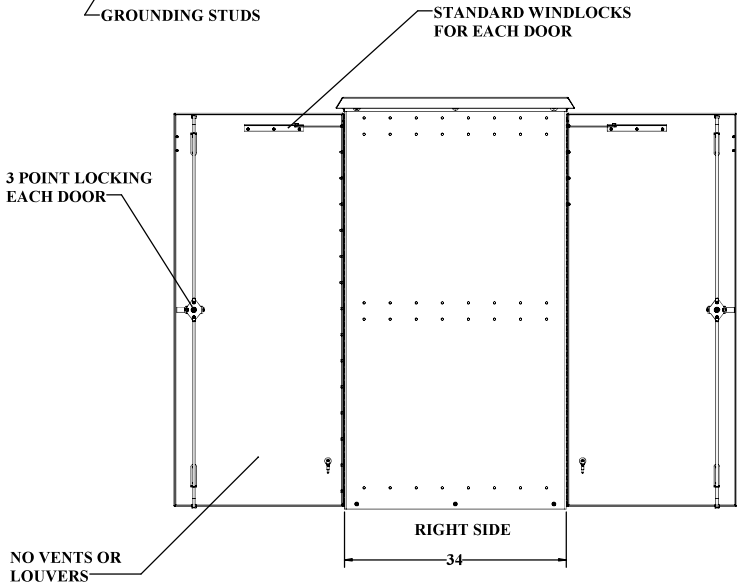

UNLESS OTHERWISE SPECIFIED:	DDB Unlimited Inc.		
DIMENSIONS ARE IN INCHES	WOD-62DD-UL50E		
ANGULAR: ±1° FRACTIONAL: ±1/64 TWO PLACE DECIMAL: ±.010 THREE PLACE DECIMAL: ±.005	WOD, 62"H, DD-UL50WOD-62DD-UL50E		
ALL EDGES ◉	SIZE	Cage Code:	DWG. NO.: REV
MATERIAL: 5052-H32-0.125 ASTM B209-04	D	3S5Y5	02059 A
PAINT: DIAMOND VOGEL, BEIGE GLOSS TEXTURE 874920	SCALE: 1:12	WEIGHT: 207 lbs.	SHEET 1 OF 3
DO NOT SCALE DRAWING			

UNCLASSIFIED PUBLIC

DDB FORM 7.1-REV K 08/03/17

WEB DRAWING (NOT FOR FABRICATION)

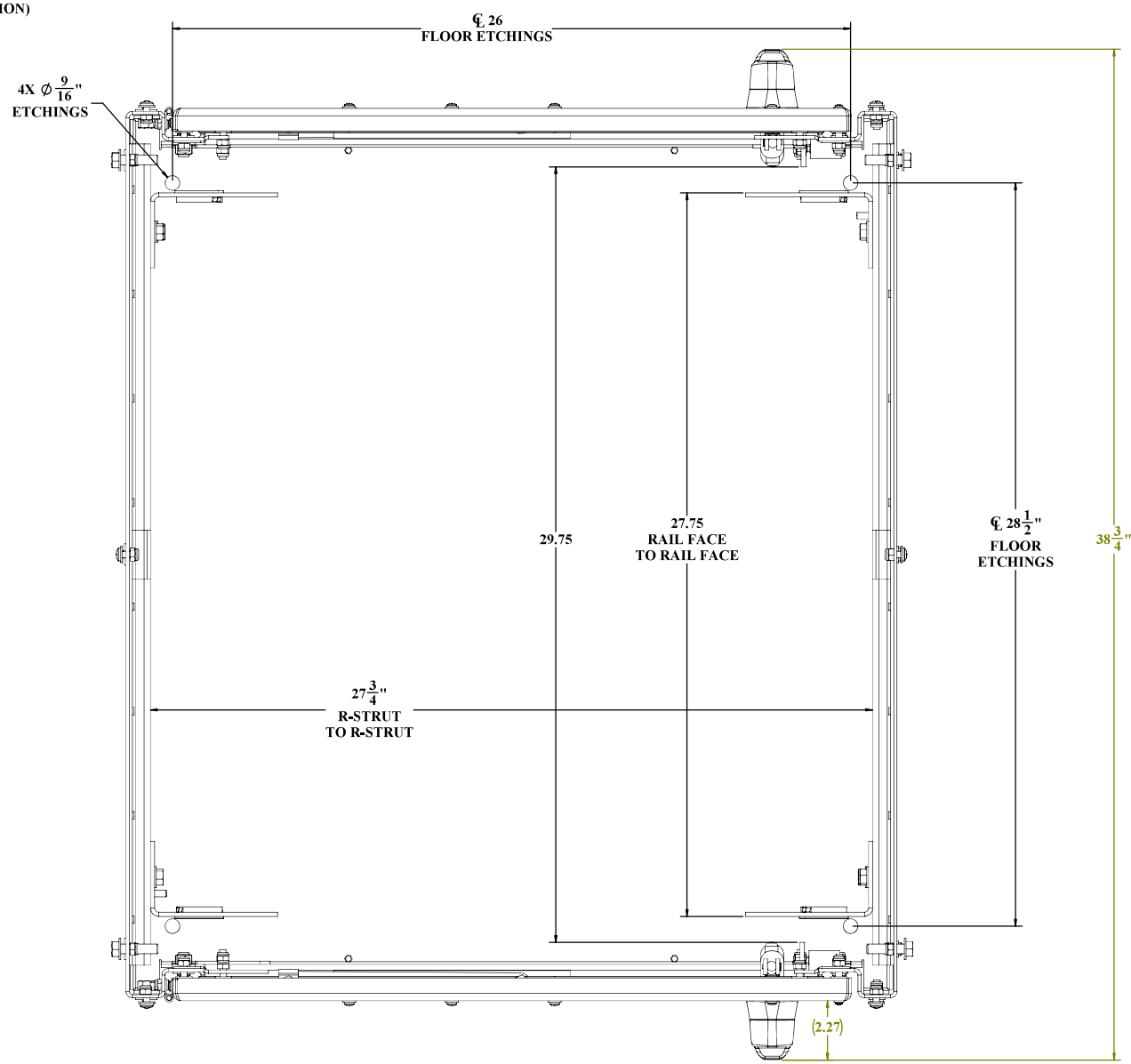

TOP VIEW
NO CEILING OR ALUMASHIELD SHOWN

WEB DRAWING (NOT FOR FABRICATION)

UNLESS OTHERWISE SPECIFIED:
DIMENSIONS ARE IN INCHES
ANGULAR: ±1°
FRACTIONAL ±1/64
TWO PLACE DECIMAL: ±.010
THREE PLACE DECIMAL: ±.005
ALL EDGES ▲.005 ▲

MATERIAL: 5052-H32 0.125 ASTM B209-04
PAINT: DIAMOND VOGEL, BEIGE GLOSS TEXTURE 874920

DO NOT SCALE DRAWING

DDB Unlimited Inc.
DD-UL50E-CLOSED
WOD, CLOSED , DD UL50DD-UL50E-CLOSED

SIZE	Cage Code:	DWG. NO.:	REV
D	3S5Y5	02059	A

SCALE: 1:12 WEIGHT: 93 lbs. SHEET 2 OF 3

DDB FORM 7.1-REV.K 08/02/17

UNCLASSIFIED PUBLIC

File Location: (DDB)(EPDM Vault)
C:\DDB\DR Requests\Customers\DDB WEB DWG\WOD Family UL50 WEB\WOD-62DD-UL50 WEB\

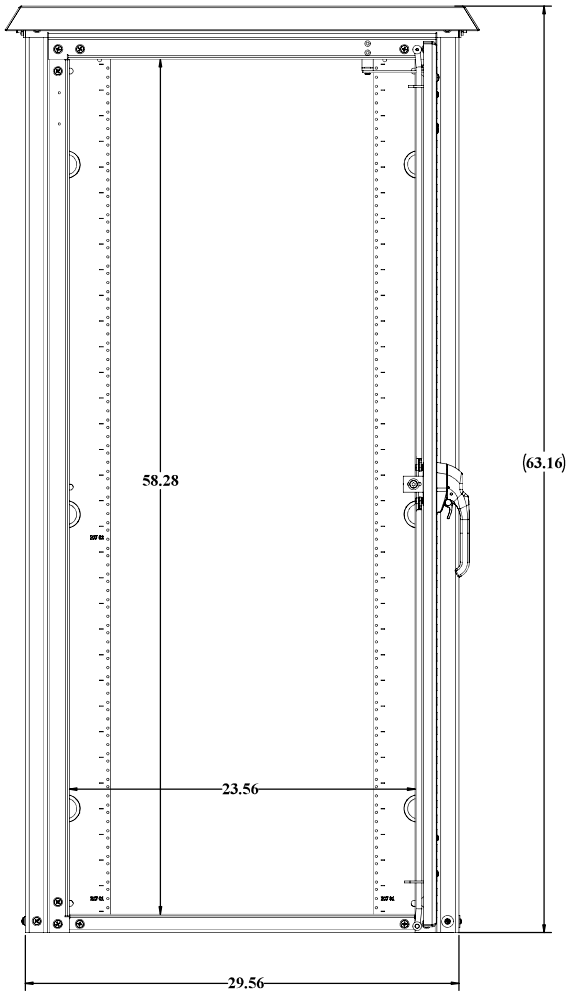

BACK VIEW
GASKET NOT SHOWN

UNLESS OTHERWISE SPECIFIED:	DDB Unlimited Inc.		
DIMENSIONS ARE IN INCHES ANGULAR: ±1° FRACTIONAL: ±1/64 TWO PLACE DECIMAL: ±.010 THREE PLACE DECIMAL: ±.005 ALL HOLES ⌀	WOD-62DD-UL50E WOD, 62"H, DD-UL50WOD-62DD-UL50E		
	SIZE: D	Cage Code: 385Y5	DWG. NO.: 02059 REV: A
MATERIAL: 5052-H32 0.125 ASTM B209-04			
PAINT: DIAMOND VOGEL, BEIGE GLOSS TEXTURE 87-9020			
DO NOT SCALE DRAWING	SCALE: 1:12	WEIGHT: 207 lbs.	SHEET 3 OF 3

DDB FORM 7.1-REV.K 08/02/17

UNCLASSIFIED PUBLIC

An ISO 9001 Certified company

UL-50 WOD SERIES

WOD-62DDXC-UL50

Made in America

Believing in American Craftsmanship

15 YEAR WARRANTY

Why Choose the WOD-UL Series?



The WOD-62DDXC-UL50 enclosure is the pinnacle of enclosures. With a fully welded chassis, heavy duty vulcanized gasketing and years of design and engineering behind it, you will find this will meet the most stringent requirements of the UL-50E Type 4 listing. Fully tested by a third party Nationally Recognized Testing Laboratory and listed to the UL-50E standard, you can trust that the WOD UL series will pass any test or inspection it faces. Designed with public safety requirements in mind, these units can be place in mission critical locations where communication or sensitive gear needs to be protected regardless of the situation. As with the standard WOD series, the WOD-UL series comes with standard 3-point locking, front and rear access with integrated wind locks, top mounted solar shield, adjustable R-strut racking, reversible 19” or 23” EIA racking, Alumiflex construction and our unmatched 15-year warranty. Moreover, there is an extensive list of optional accessories including HVAC units, electrical panels, and cable entry solutions to name a few. No matter the application, DDB provides cutting-edge design, competitive pricing, benchmark lead times, and guaranteed delivery. Whether you require a custom enclosure or something from our substantial stock, our professional staff is here to help you today.

Application Types

Telecommunications
Wireless/Broadband
Fiber Optics
Back Haul
Public Safety
DAS
Utility
Base Station
Military
Trailer-Based Communications
Wi-Fi
LTEE/4G/5G



Environmental & Safety Ratings:

- ✓ ETL environmentally listed to UL 50/50E, IP 66, Type 4
- ✓ ETL listed; Safety Requirements, UL 62368-1:2019 Ed.3, CSA C22.2

Features

15 Year Warranty
0.125" Aluminum Construction
3-Point Locking System
Heavy Duty Out-Door Construction
Front and Rear Access
Stainless Steel External Hardware/Hinge
Cream Powder-Coat, Standard
Wind Locks
Quick Shipping

Weight and Dimensions

Approximate Exterior Enclosure Dimensions:
64”H x 33”W x 47”D
Shipping Dimensions:
42”D x 52”W x 72”H- Palletized
Approximate Shipping Weight:
287 lbs.

2301 S. HWY 77 Pauls Valley, OK 73075
T: (405)-665-2876
sales@ddbunlimited.com www.ddbunlimited.com

DDB UNLIMITED®

An ISO 9001 Certified company

UL-50 WOD SERIES

WOD-62DDXC-UL50

Made in America

Believing in American Craftsmanship

15 YEAR WARRANTY



Features

1. Alumishield
2. Wind Locks
3. 19” and 23" Adjustable Racking Rails
4. 3-Point Locking System
5. Stainless Steel Door Hinge
6. Heavy Duty 0.160" Doors
7. Powder-Coat Cream
8. Rear Door Access

2301 S. HWY 77 Pauls Valley, OK 73075

T: (405)-665-2876

sales@ddbunlimited.com www.ddbunlimited.com

Scan this code for Climate Control

Scan this code for Accessories

REVISIONS		
REV.	DESCRIPTION	DATE
A	CRATED DRAWING PER DR-02060	7/17/2019

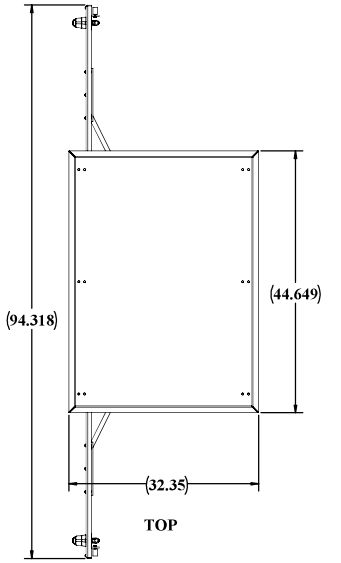

TOP

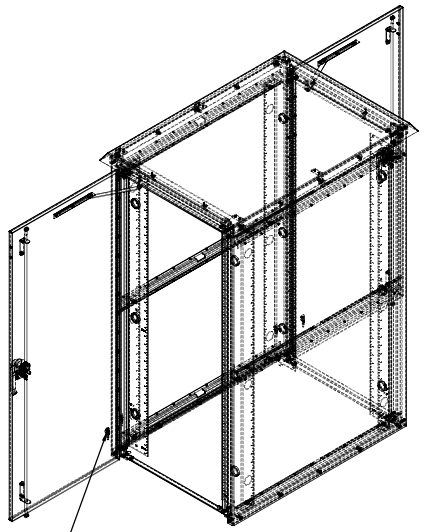

GROUNDING STUDS

DDB STANDARD RAILS

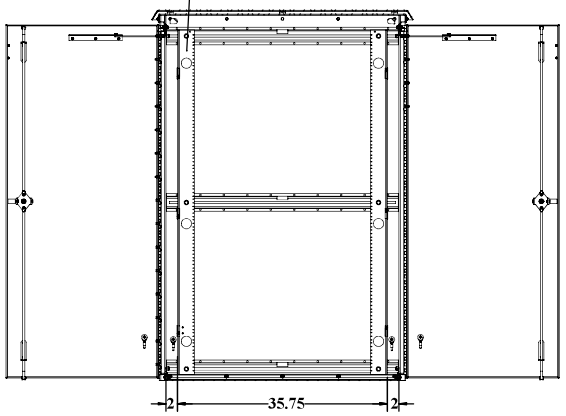

SECTION A-A
SCALE 1 : 10

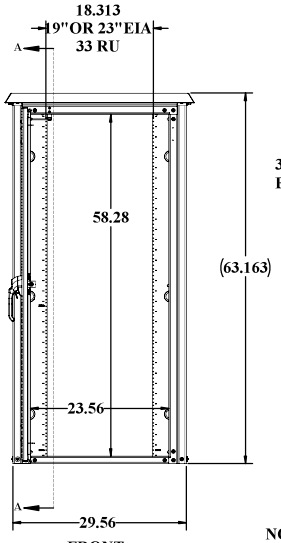

FRONT

STANDARD WINDLOCKS FOR EACH DOOR

3 POINT LOCKING EACH DOOR

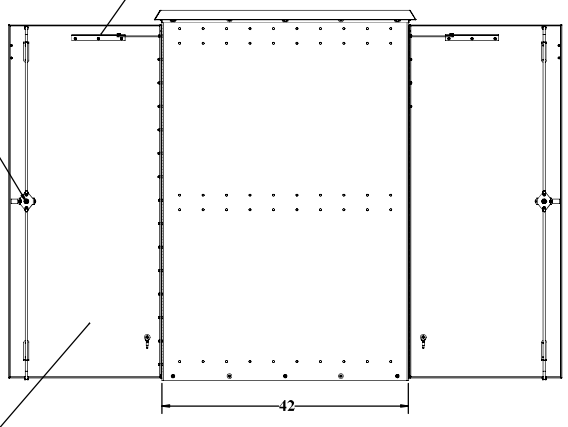

RIGHT SIDE

NO VENTS OR LOUVERS

UNLESS OTHERWISE SPECIFIED:	DDB Unlimited Inc.		
DIMENSIONS ARE IN INCHES ANGULAR: ±1° FRACTIONAL: NO DECIMAL: ±1/16 TWO PLACE DECIMAL: ±.010 TWO PLACE DECIMAL: ±.005 THREE PLACE DECIMAL: ±.010 ALL HOLES ±.005	WOD-42DDX-UL50E WOD, 42"H, DDX-UL50WOD-42DDX-UL50E		
	SIZE: D	Cage Code: 385Y5	DWG. NO.: 02060 REV: A
MATERIAL: 5052-H32 0.125 ASTM B209-04	SCALE: 1:12	WEIGHT: 231 lbs.	SHEET 1 OF 3
PAINT: DIAMOND VOGEL, BEIGE GLOSS TEXTURE 874920			
DO NOT SCALE DRAWING			

DDB-FORM 7.1-REV K 08/03/17

UNCLASSIFIED PUBLIC

File Location: (DDB)(EPDM Vault)
C:\DDB\DR Requests\Customers\DDB WEB DWG\WOD Family UL50 WEB\WOD-42DDX-UL50

WEB DRAWING (NOT FOR FABRICATION)`

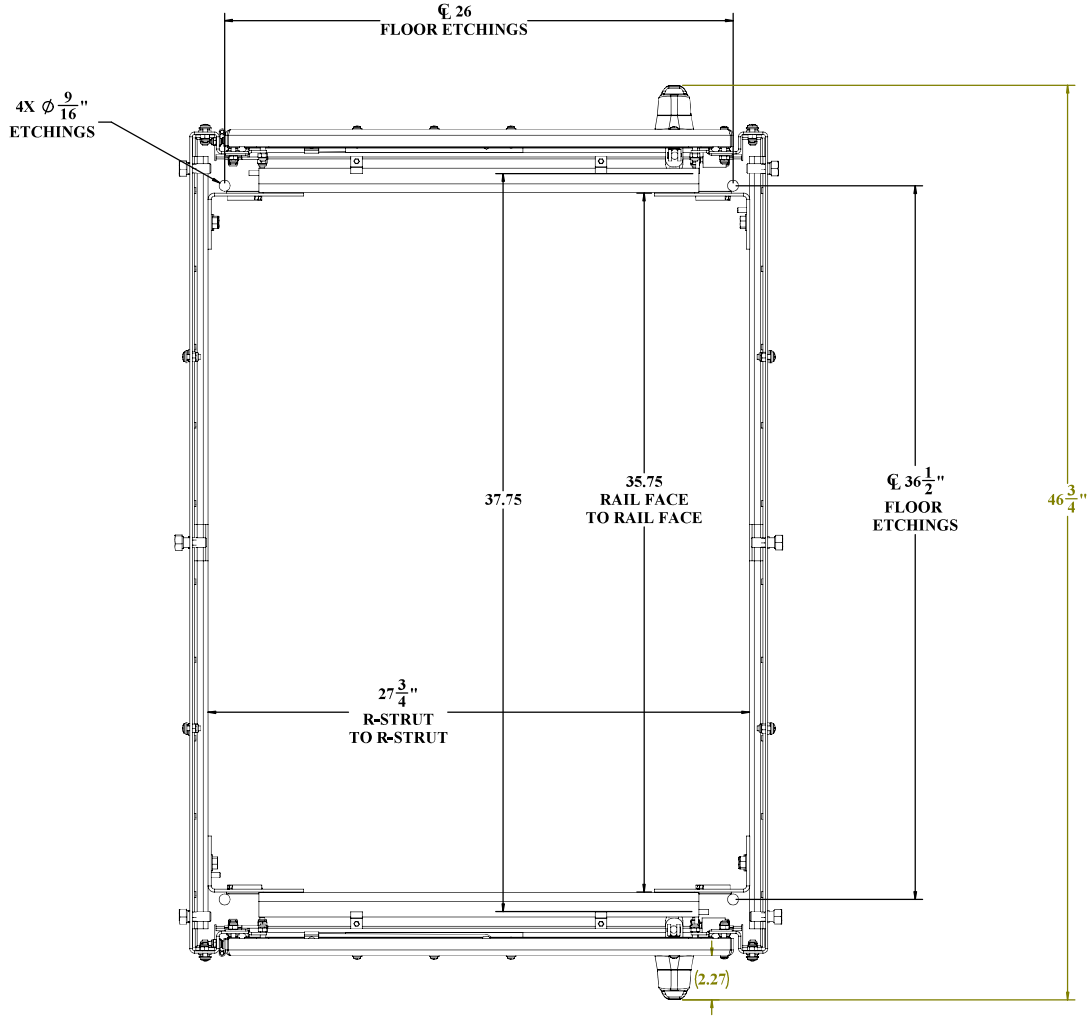

TOP VIEW
NO CEILING OR ALUMASHIELD SHOWN

WEB DRAWING (NOT FOR FABRICATION)

UNLESS OTHERWISE SPECIFIED:	DDB Unlimited Inc.		
DIMENSIONS ARE IN INCHES ANGULAR: ±1° FRACTIONAL NO DECIMAL: ±1/16 TWO PLACE DECIMAL: ±.010 TWO PLACE DECIMAL: ±.0100 THREE PLACE DECIMAL: ±.0030 ALL EDGES ◉ BREAK◉	DDX-UL50E-CLOSED WOD, CLOSED, DDX-UL50DDX-UL50E-CLOSED		
	SIZE: D	Cage Code: 3S5Y5	DWG. NO.: 02060 REV: A
MATERIAL: 5052-H32-0.125 ASTM B209-04	SCALE: 1:12	WEIGHT: 109 lbs.	SHEET 2 OF 3
PAINT: DIAMOND VOGEL, BEIGE GLOSS TEXTURE 874920			
DO NOT SCALE DRAWING			

DDB FORM 7.1-REV.K 08/02/17

UNCLASSIFIED PUBLIC

File Location: (DDB) (EPDM Vault)
C:\DDB\DR Requests\Customers\DDB WEB DWG\WOD Family UL50 WEB\WOD-62DDX-UL50

WEB DRAWING (NOT FOR FABRICATION)`

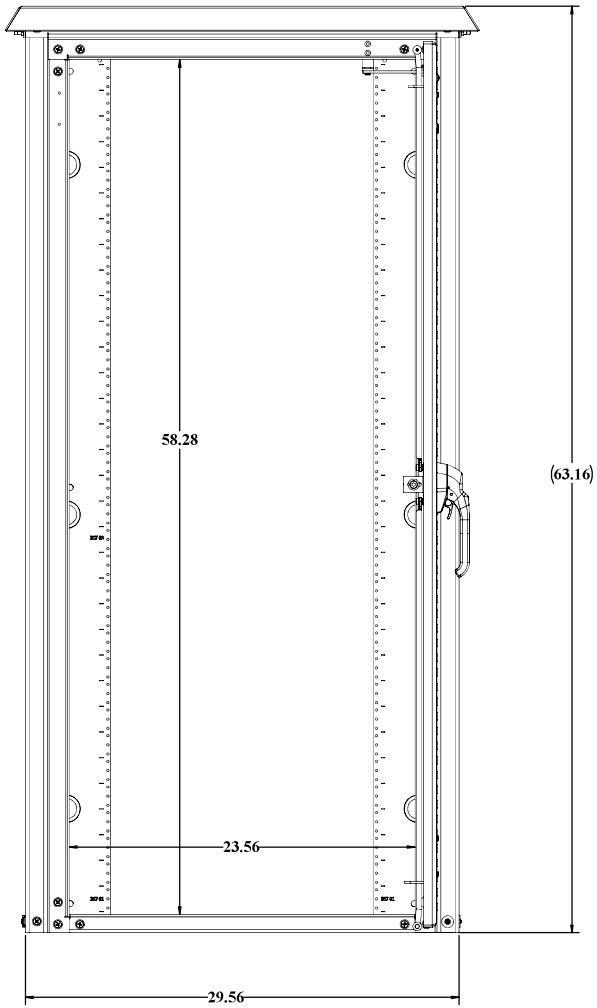

BACK VIEW
GASKET NOT SHOWN

WEB DRAWING (NOT FOR FABRICATION)

UNLESS OTHERWISE SPECIFIED:	*DDB Unlimited Inc.*			
DIMENSIONS ARE IN INCHES ANGULAR: ±1° FRACTIONAL/NO DECIMAL: ±1/16 TWO PLACE DECIMAL: ±.010 THREE PLACE DECIMAL: ±.005 ALL HOLES ±.003	WOD-42DDX-UL50E WOD, 62"H, DDX-UL50WOD-62DDX-UL50E			
	SIZE	Cage Code:	DWG. NO.:	REV
	D	3S5Y5	02060	A
MATERIAL: 5052-H32-0.125 ASTM B209-04	SCALE: 1:12	WEIGHT: 231 lbs.		SHEET 3 OF 3
PAINT: DIAMOND VOGEL, BEIGE GLOSS TEXTURE 874920				
DO NOT SCALE DRAWING				

DDB FORM 7.1-REV.K 08/03/17

UNCLASSIFIED PUBLIC

File Location: (DDB)(EPDM Vault)
C:\DDB\DR Requests\Customers\DDB WEB DWG\WOD Family UL50 WEB\WOD-62DDX-UL50

An ISO 9001 Certified company

UL-50 WOD SERIES

WOD-78DXC-UL50

Made in America

Believing in American Craftsmanship

15 YEAR WARRANTY

Why Choose the WOD-UL Series?



The WOD-78DXC-UL50 enclosure is the pinnacle of enclosures. With a fully welded chassis, heavy duty vulcanized gasketing and years of design and engineering behind it, you will find this will meet the most stringent requirements of the UL-50E Type 4 listing. Fully tested by a third party Nationally Recognized Testing Laboratory and listed to the UL-50E standard, you can trust that the WOD UL series will pass any test or inspection it faces. Designed with public safety requirements in mind, these units can be place in mission critical locations where communication or sensitive gear needs to be protected regardless of the situation. As with the standard WOD series, the WOD-UL series comes with standard 3-point locking, front and rear access with integrated wind locks, top mounted solar shield, adjustable R-strut racking, reversible 19” or 23” EIA racking, Alumiflex construction and our unmatched 15-year warranty. Moreover, there is an extensive list of optional accessories including HVAC units, electrical panels, and cable entry solutions to name a few. No matter the application, DDB provides cutting-edge design, competitive pricing, benchmark lead times, and guaranteed delivery. Whether you require a custom enclosure or something from our substantial stock, our professional staff is here to help you today.

Features

15 Year Warranty

0.125" Aluminum Construction

3-Point Locking System

Heavy Duty Out-Door Construction

Front and Rear Access

Stainless Steel External Hardware/Hinge

Cream Powder-Coat, Standard

Wind Locks

Quick Shipping

Application Types

Telecommunications
Wireless/Broadband
Fiber Optics
Back Haul
Public Safety
DAS
Utility
Base Station
Military
Trailer-Based Communications
Wi-Fi
LTEE/4G/5G



Environmental & Safety Ratings:

- ✓ ETL environmentally listed to UL 50/50E, IP 66, Type 4
- ✓ ETL listed; Safety Requirements, UL 62368-1:2019 Ed.3, CSA C22.2

Weight and Dimensions

Approximate Exterior Enclosure Dimensions:

79”H x 33”W x 30”D

Shipping Dimensions:

42”D x 32”W x 84”H- Palletized

Approximate Shipping Weight:

248 lbs.

2301 S. HWY 77 Pauls Valley, OK 73075
T: (405)-665-2876
sales@ddbunlimited.com www.ddbunlimited.com

An ISO 9001 Certified company

UL-50 WOD SERIES

WOD-78DXC-UL50

Made in America

Believing in American Craftsmanship

15 YEAR WARRANTY



Features

1. Alumishield
2. Wind Locks
3. 19” and 23" Adjustable Racking Rails
4. Stainless Steel Door Hinge
5. 3-Point Locking System
6. Heavy Duty 0.160" Doors
7. Powder-Coat Cream
8. Rear Door Access

2301 S. HWY 77 Pauls Valley, OK 73075
T: (405)-665-2876
sales@ddbunlimited.com www.ddbunlimited.com

Scan this code for Climate Control

Scan this code for Accessories

REVISIONS		
REV.	DESCRIPTION	DATE
A	CREATED DRAWING PER DR-02061	7/17/2019

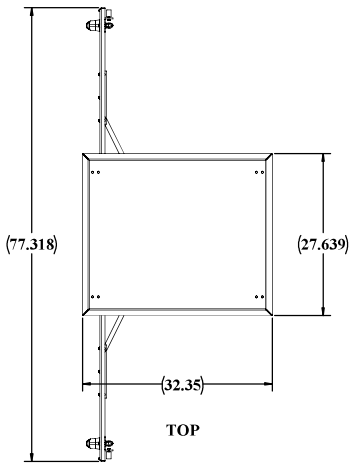

TOP

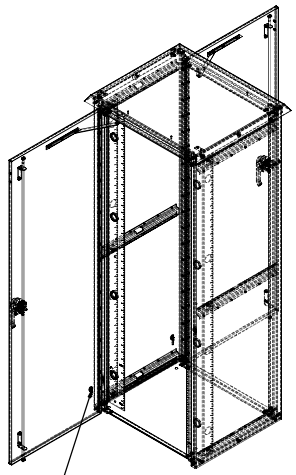

GROUNDING STUDS

DDB STANDARD RAILS

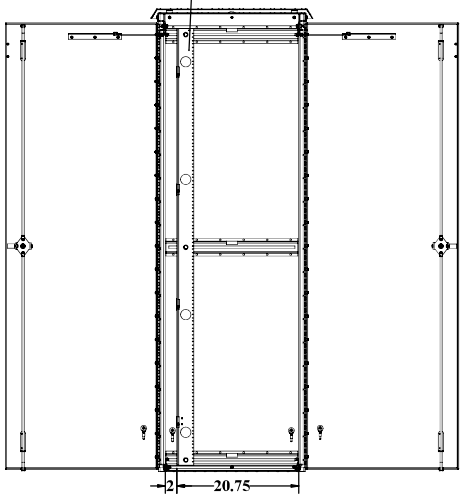

SECTION A-A
SCALE 1 : 10

18.313
19"OR 23" EIA
42 RU

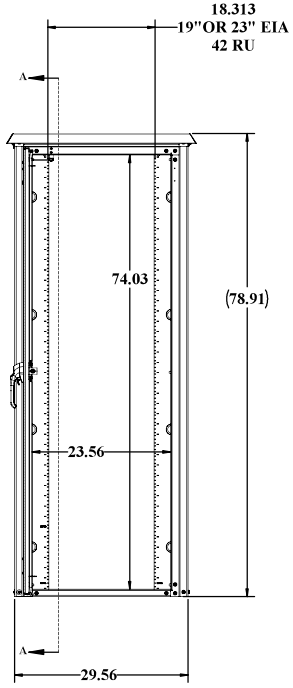

FRONT

WELDED ENCLOSURE

STANDARD WINDLOCKS
FOR EACH DOOR

3 POINT LOCKING
EACH DOOR

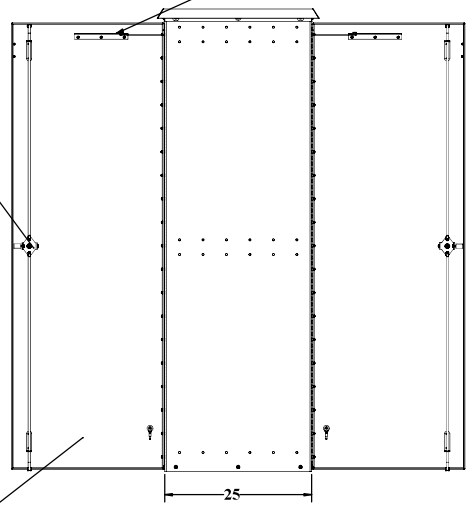

RIGHT SIDE

NO VENTS OR
LOUVERS

UNLESS OTHERWISE SPECIFIED:	DDB Unlimited Inc.		
DIMENSIONS ARE IN INCHES ANGULAR: ±1° FRACTIONAL: ±1/32 DECIMAL: ±.030 TWO PLACE DECIMAL: ±.010 THREE PLACE DECIMAL: ±.005 ALL HOLES ±.003	WOD-78DX-UL50E WOD, 78"H, DX-UL50WOD-78DX-UL50E		
	SIZE: D	Cage Code: 385Y5	DWG. NO.: 02061 REV: A
MATERIAL: 16GA CRS, 11GA ASTM B209-04	SCALE: 1:12	WEIGHT: 196lbs.	SHEET 1 OF 3
PAINT: DIAMOND VOGEL, BEIGE GLOSS TEXTURE E14920			
DO NOT SCALE DRAWING			

DDB FORM 7.1-REV K 08/03/17

UNCLASSIFIED PUBLIC

File Location: (DDB)(EPDM Vault)
C:\DDB\DR Requests\Customers\DDB WEB DWG\WOD Family UL50 WEB\WOD-78DX-UL50 WEB\

WEB DRAWING (NOT FOR FABRICATION)

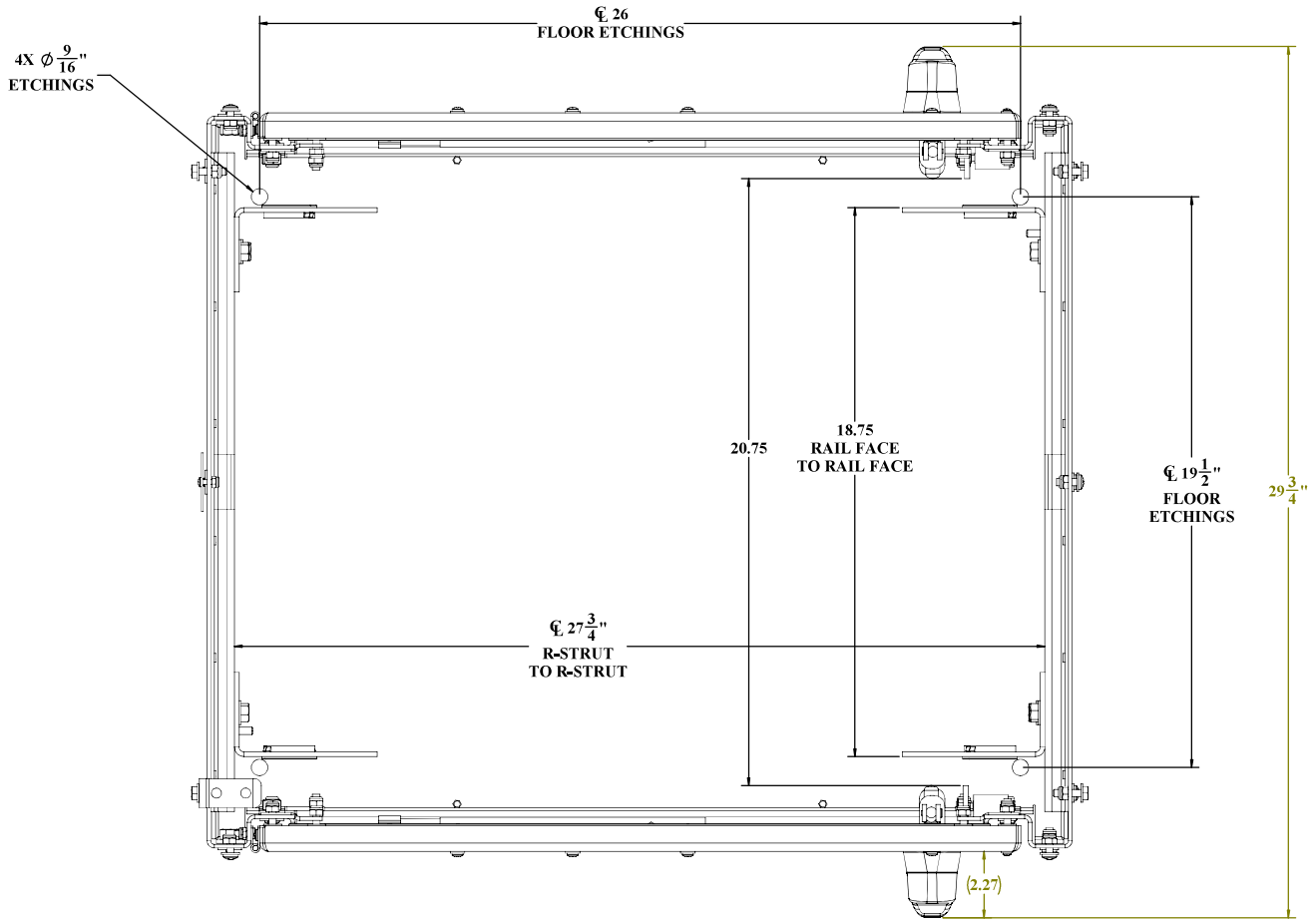

TOP VIEW
NO CEILING OR ALUMASHIELD SHOWN

WEB DRAWING (NOT FOR FABRICATION)

UNLESS OTHERWISE SPECIFIED: DIMENSIONS ARE IN INCHES ANGULAR: FRACTIONAL ±; TWO PLACE DECIMAL: ±.01; THREE PLACE DECIMAL: ±.005 ALL EDGES ⌀	DDB Unlimited Inc.		
	DX-UL50E-CLOSED		
	WOD, CLOSED, DX-UL50DX-UL50E-CLOSED		
	SIZE: D	Cage Code: 3S5Y5	DWG. NO.: 02061 REV: A
MATERIAL: 5052-H32 0.125 ASTM B209-04			
PAINT: DIAMOND VOGEL, BEIGE GLOSS TEXTURE 874920	SCALE: 1:12	WEIGHT: 77 lbs.	SHEET 2 OF 3
DO NOT SCALE DRAWING			

UNCLASSIFIED PUBLIC

File Location: (DDB)(EPDM Vault)
C:\DDB\DR Requests\Customers\DDB WEB DWG\WOD Family UL50 WEB\WOD-78DX-UL50 WEB\

DDB FORM 7.1-REV.K 08/02/17

WEB DRAWING (NOT FOR FABRICATION)

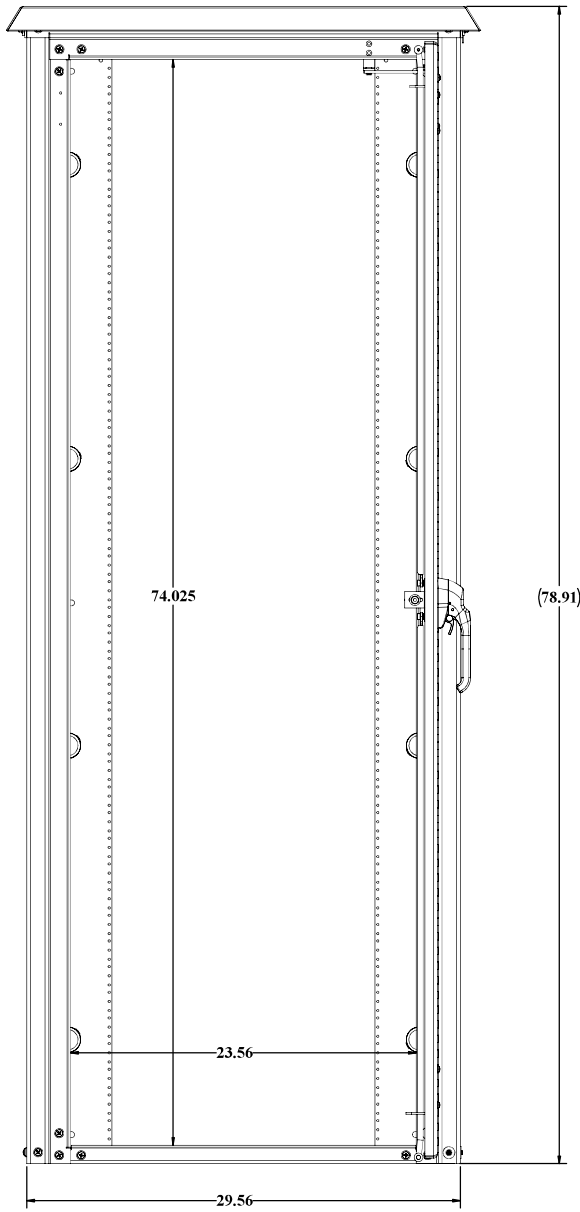

BACK VIEW
GASKET NO SHOWN

WEB DRAWING (NOT FOR FABRICATION)

UNLESS OTHERWISE SPECIFIED: DIMENSIONS ARE IN INCHES. ANGULAR: FRACTIONAL: TWO PLACE DECIMAL: THREE PLACE DECIMAL:	*DDB Unlimited Inc.* WOD-78DX-UL50E WOD, 78"H, DX-UL50WOD-78DX-UL50E
MATERIAL: 5052-H32-0.125 ASTM B209-04	SIZE D · Cage Code: 385Y5 · DWG. NO.: 02061 · REV A
PAINT: DIAMOND VOGEL, BEIGE GLOSS TEXTURE 874920	SCALE: 1:12 · WEIGHT: 196lbs. · SHEET 3 OF 3
DO NOT SCALE DRAWING	

UNCLASSIFIED PUBLIC

File Location: (DDB)(EPDM Vault)
C:\DDB\DR Requests\Customers\DDB WEB DWG\WOD Family UL50 WEB\WOD-78DX-UL50 WEB\

DDB FORM 7.1-REV.K 08/03/17

An ISO 9001 Certified company

UL-50 WOD SERIES

WOD-78DDC-UL50

Made in America

Believing in American Craftsmanship

15 YEAR WARRANTY

Why Choose the WOD-UL Series?



The WOD-78DDC-UL50 enclosure is the pinnacle of enclosures. With a fully welded chassis, heavy duty vulcanized gasketing and years of design and engineering behind it, you will find this will meet the most stringent requirements of the UL-50E Type 4 listing. Fully tested by a third party Nationally Recognized Testing Laboratory and listed to the UL-50E standard, you can trust that the WOD UL series will pass any test or inspection it faces. Designed with public safety requirements in mind, these units can be place in mission critical locations where communication or sensitive gear needs to be protected regardless of the situation. As with the standard WOD series, the WOD-UL series comes with standard 3-point locking, front and rear access with integrated wind locks, top mounted solar shield, adjustable R-strut racking, reversible 19" or 23" EIA racking, Alumiflex construction and our unmatched 15-year warranty. Moreover, there is an extensive list of optional accessories including HVAC units, electrical panels, and cable entry solutions to name a few. No matter the application, DDB provides cutting-edge design, competitive pricing, benchmark lead times, and guaranteed delivery. Whether you require a custom enclosure or something from our substantial stock, our professional staff is here to help you today.

Application Types

Telecommunications
Wireless/Broadband
Fiber Optics
Back Haul
Public Safety
DAS
Utility
Base Station
Military
Trailer-Based Communications
Wi-Fi
LTEE/4G/5G



Environmental & Safety Ratings:

- ✓ ETL environmentally listed to UL 50/50E, IP 66, Type 4
- ✓ ETL listed; Safety Requirements, UL 62368-1:2019 Ed.3, CSA C22.2

Features

15 Year Warranty
0.125" Aluminum Construction
3-Point Locking System
Heavy Duty Out-Door Construction
Front and Rear Access
Stainless Steel External Hardware/Hinge
Cream Powder-Coat, Standard
Wind Locks
Quick Shipping

Weight and Dimensions

Approximate Exterior Enclosure Dimensions:
79"H x 33"W x 39"D
Shipping Dimensions:
42"D x 42"W x 84"H- Palletized
Approximate Shipping Weight:
291 lbs.

2301 S. HWY 77 Pauls Valley, OK 73075
T: (405)-665-2876
sales@ddbunlimited.com www.ddbunlimited.com

UL-50 WOD SERIES

WOD-78DDC-UL50

An ISO 9001 Certified company

Made in America

Believing in American Craftsmanship

15 YEAR WARRANTY



Features

1. Alumishield
2. Wind Locks
3. 19” and 23" Adjustable Racking Rails
4. Stainless Steel Door Hinge
5. 3-Point Locking System
6. Heavy Duty 0.160" Doors
7. Powder-Coat Cream
8. Rear Door Access

2301 S. HWY 77 Pauls Valley, OK 73075

T: (405)-665-2876

sales@ddbunlimited.com www.ddbunlimited.com

Scan this code for Climate Control

Scan this code for Accessories

REVISIONS		
REV.	DESCRIPTION	DATE
A	CREATED DRAWING PER DR-02062	7/17/2019

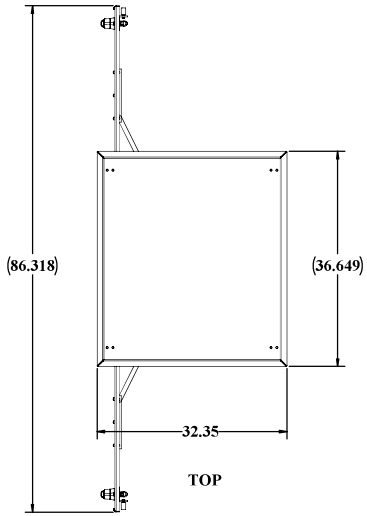

TOP

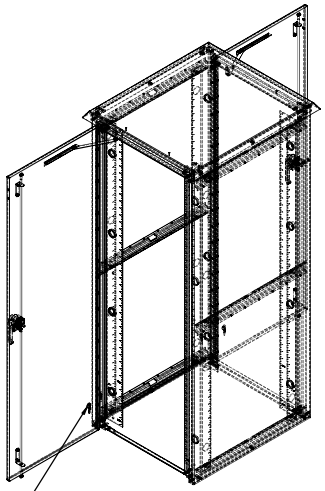

GROUNDING STUDS

DDB STANDARD RAILS

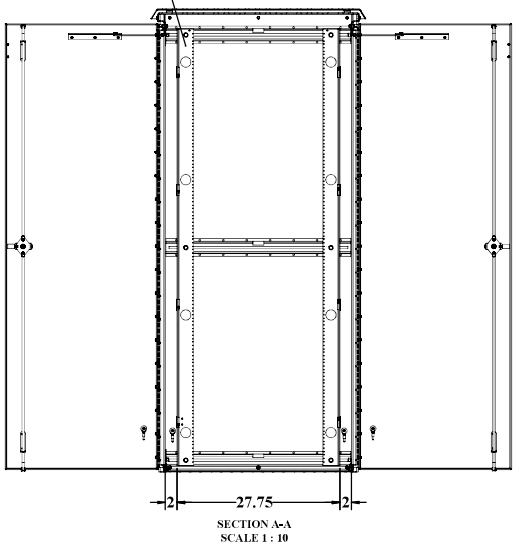

SECTION A-A
SCALE 1 : 10

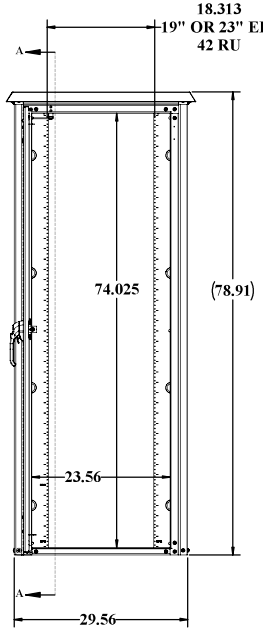

FRONT

WELDED ENCLOSURE

STANDARD WINDLOCKS
FOR EACH DOOR

3 POINT LOCKING
EACH DOOR

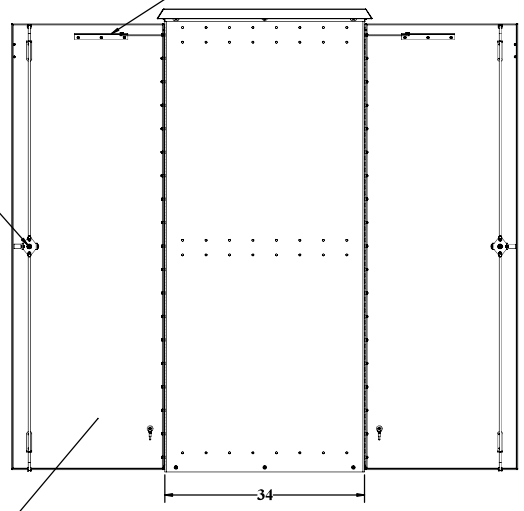

NO VENTS OR
LOUVERS

RIGHT SIDE

UNLESS OTHERWISE SPECIFIED:	DDB Unlimited Inc.			
DIMENSIONS ARE IN INCHES ANGULAR: ±1° FRACTIONAL: ±1/32 TWO PLACE DECIMAL: ±.010 THREE PLACE DECIMAL: ±.005 ALL HOLES ⌀.005 Ⓜ	WOD-78DD-UL50 WOD, 78"H, DD-UL50WOD-78DD-UL50			
	SIZE	Cage Code:	DWG. NO.:	REV
MATERIAL: 5052-H32-0.125 ASTM B209-04	D	3S5Y5	02062	A
PAINT: DIAMOND VOGEL, BRITE GLOSS TEXTURE 874920	SCALE: 1:16	WEIGHT: 243 lbs.		SHEET 1 OF 3
DO NOT SCALE DRAWING				

DDB FORM 7.1-REV K 08/03/17

UNCLASSIFIED PUBLIC

WEB DRAWING (NOT FOR FABRICATION)

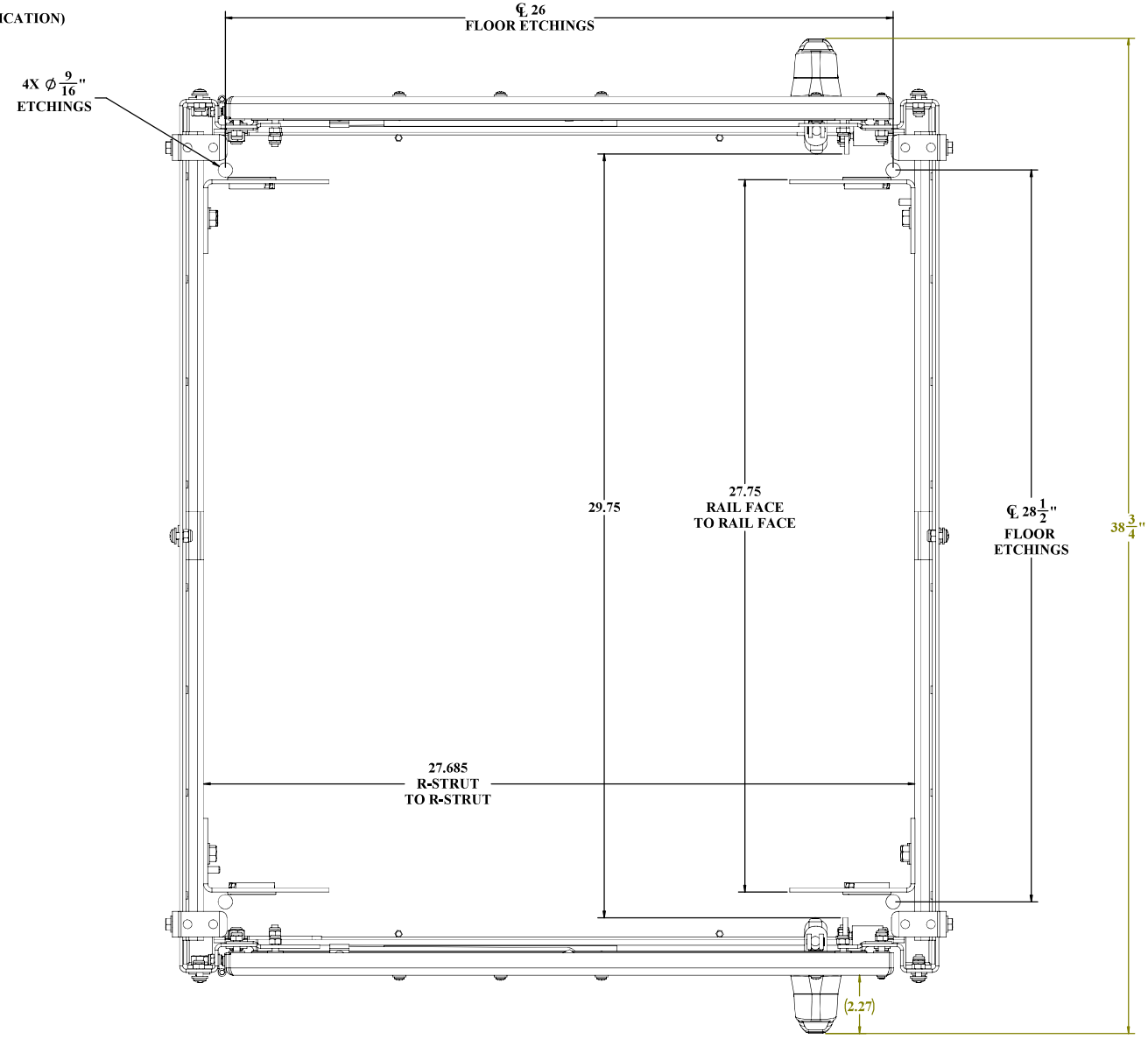

TOP VIEW
NO CEILING OR ALUMASHIELD SHOWN

WEB DRAWING (NOT FOR FABRICATION)

UNLESS OTHERWISE SPECIFIED: DIMENSIONS ARE IN INCHES. ANGULAR: ±1° FRACTIONAL: ±1/64 TWO PLACE DECIMAL: ±.010 THREE PLACE DECIMAL: ±.005. ALL EDGES ▲	DDB Unlimited Inc.		
	DD-UL50E-CLOSED		
	WOD, CLOSED , DD UL50DD-UL50E-CLOSED		
	SIZE: D	Cage Code: 385Y5	DWG. NO.: 02062 REV: A
MATERIAL: 5052-H32-0.125 ASTM B209-04			
PAINT: DIAMOND VOGEL, BEIGE GLOSS TEXTURE 874920	SCALE: 1:16	WEIGHT: 93 lbs.	SHEET 2 OF 3
DO NOT SCALE DRAWING			

DDB FORM 7.1-REV.K 08/03/17

UNCLASSIFIED PUBLIC

File Location: (DDB)(EPDM Vault)
C:\DDB\DR Requests\Customers\DDB WEB DWG\WOD Family UL50 WEB\WOD-78DD-UL50 WEB\

WEB DRAWING (NOT FOR FABRICATION)

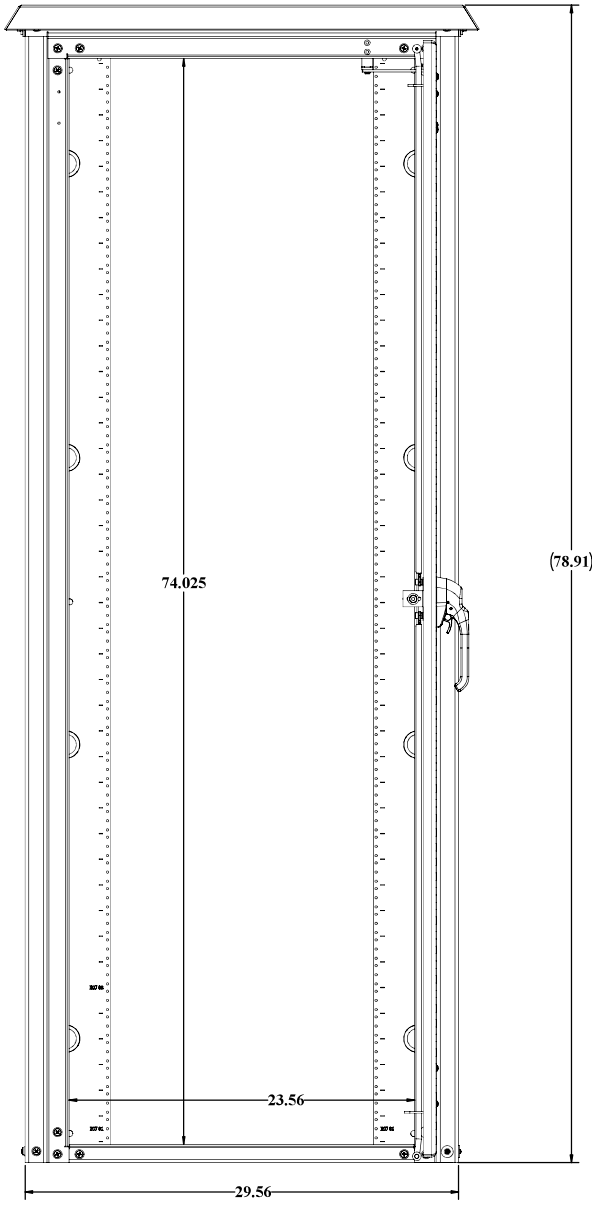

BACK VIEW
GASKET NOT SHOWN

WEB DRAWING (NOT FOR FABRICATION)

UNLESS OTHERWISE SPECIFIED: DIMENSIONS ARE IN INCHES ANGULAR: FRACTIONAL: TWO PLACE DECIMAL: THREE PLACE DECIMAL: ALL EDGES	*DDB Unlimited Inc.* WOD-78DB-UL50 WOD, 78"H, DB-UL50WOD-78DB-UL50		
	SIZE: D	Cage Code: 385Y5	DWG. NO.: 02062 REV: A
MATERIAL: 16GA HRS PER ASTM B209-04			
PAINT: DIAMOND VOGEL, BEIGE GLOSS TEXTURE #14920			
DO NOT SCALE DRAWING	SCALE: 1:16	WEIGHT: 243 lbs.	SHEET 3 OF 3

UNCLASSIFIED PUBLIC

File Location: (DDB)(EPDM Vault)
C:\DDB\DR Requests\Customers\DDB WEB DWG\WOD Family UL50 WEB\WOD-78DB-UL50 WEB\

DDB FORM 7.1-REV.K 08/03/17

An ISO 9001 Certified company

UL-50 WOD SERIES

WOD-78DDXC-UL50

Made in America

Believing in American Craftsmanship

15 YEAR WARRANTY

Why Choose the WOD-UL Series?



The WOD-78DDXC-UL50 enclosure is the pinnacle of enclosures. With a fully welded chassis, heavy duty vulcanized gasketing and years of design and engineering behind it, you will find this will meet the most stringent requirements of the UL-50E Type 4 listing. Fully tested by a third party Nationally Recognized Testing Laboratory and listed to the UL-50E standard, you can trust that the WOD UL series will pass any test or inspection it faces. Designed with public safety requirements in mind, these units can be place in mission critical locations where communication or sensitive gear needs to be protected regardless of the situation. As with the standard WOD series, the WOD-UL series comes with standard 3-point locking, front and rear access with integrated wind locks, top mounted solar shield, adjustable R-strut racking, reversible 19” or 23” EIA racking, Alumiflex construction and our unmatched 15-year warranty. Moreover, there is an extensive list of optional accessories including HVAC units, electrical panels, and cable entry solutions to name a few. No matter the application, DDB provides cutting-edge design, competitive pricing, benchmark lead times, and guaranteed delivery. Whether you require a custom enclosure or something from our substantial stock, our professional staff is here to help you today.

Application Types

Telecommunications
Wireless/Broadband
Fiber Optics
Back Haul
Public Safety
DAS
Utility
Base Station
Military
Trailer-Based Communications
Wi-Fi
LTEE/4G/5G



Environmental & Safety Ratings:

- ✓ ETL environmentally listed to UL 50/50E, IP 66, Type 4
- ✓ ETL listed; Safety Requirements, UL 62368-1:2019 Ed.3, CSA C22.2

Features

15 Year Warranty
0.125" Aluminum Construction
3-Point Locking System
Heavy Duty Out-Door Construction
Front and Rear Access
Stainless Steel External Hardware/Hinge
Cream Powder-Coat, Standard
Wind Locks
Quick Shipping

Weight and Dimensions

Approximate Exterior Enclosure Dimensions:
79”H x 33”W x 47”D
Shipping Dimensions:
42”D x 52”W x 84”H- Palletized
Approximate Shipping Weight:
324 lbs.

2301 S. HWY 77 Pauls Valley, OK 73075
T: (405)-665-2876
sales@ddbunlimited.com www.ddbunlimited.com

UL-50 WOD SERIES

WOD-78DDXC-UL50

An ISO 9001 Certified company

Made in America

Believing in American Craftsmanship

15 YEAR WARRANTY



Features

1. Alumishield
2. Wind Locks
3. 19” and 23" Adjustable Racking Rails
4. Stainless Steel Door Hinge
5. 3-Point Locking System
6. Heavy Duty 0.160" Doors
7. Powder-Coat Cream
8. Rear Door Access

2301 S. HWY 77 Pauls Valley, OK 73075

T: (405)-665-2876

sales@ddbunlimited.com www.ddbunlimited.com

Scan this code for Climate Control

Scan this code for Accessories

REVISIONS		
REV.	DESCRIPTION	DATE
A	CREATED DRAWING PER DR-02063	7/17/2019

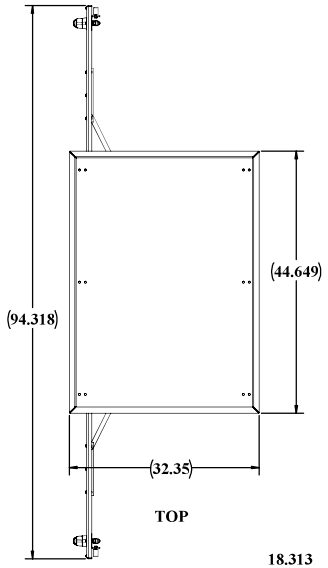

TOP

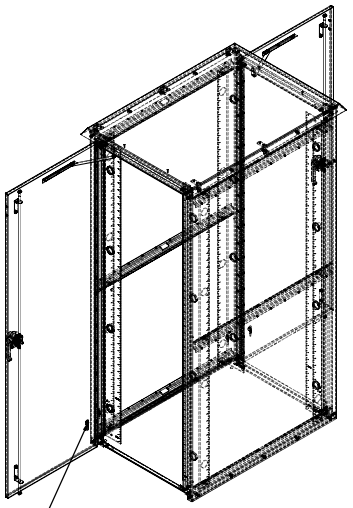

GROUNDING STUDS

DDB STANDARD RAILS

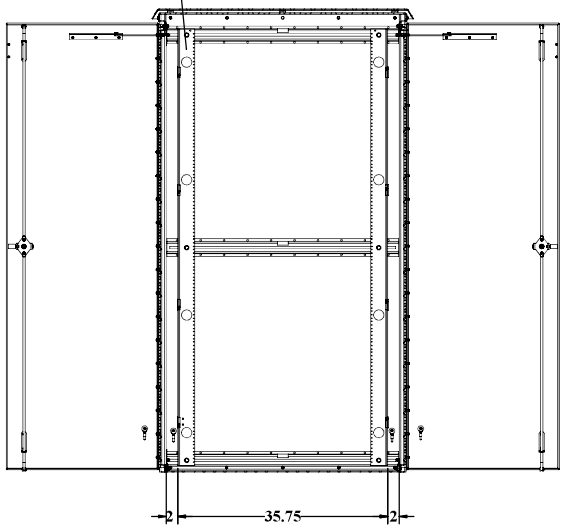

SECTION A-A
SCALE 1 : 10

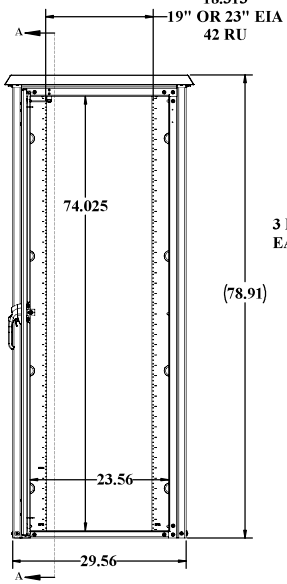

FRONT

STANDARD WINDLOCKS
FOR EACH DOOR

3 POINT LOCKING
EACH DOOR

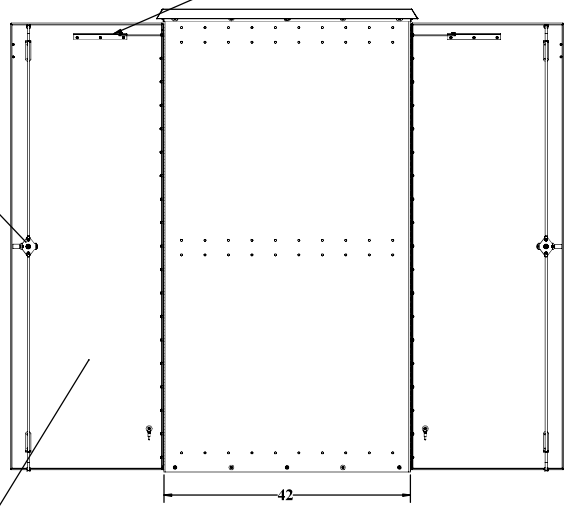

RIGHT SIDE

NO VENTS OR
LOUVERS

WELDED ENCLOSURE

UNLESS OTHERWISE SPECIFIED:	DDB Unlimited Inc.			
DIMENSIONS ARE IN INCHES ANGULAR: ±1° FRACTIONAL: ±1/32 TWO PLACE DECIMAL: ±.010 THREE PLACE DECIMAL: ±.005 ALL HOLES ⌀	WOD-78DDX-UL50E WOD, 78"H, DDX-UL50WOD-78DDX-UL50E			
	SIZE	Cage Code:	DWG. NO.:	REV
	D	3S5Y5	02063	A
MATERIAL: 5052-H32-0.125 ASTM B209-04	SCALE: 1:16	WEIGHT: 270 lbs.		SHEET 1 OF 3
PAINT: DIAMOND VOGEL, BEIGE GLOSS TEXTURE 874920				
DO NOT SCALE DRAWING				

UNCLASSIFIED PUBLIC

File Location: (DDB)(EPDM Vault)
C:\DDB\DR Requests\Customers\DDB WEB DWG\WOD Family UL50 WEB\WOD-78DDX-UL50

DDB FORM 7.1-REV K 08/03/17

WEB DRAWING (NOT FOR FABRICATION)

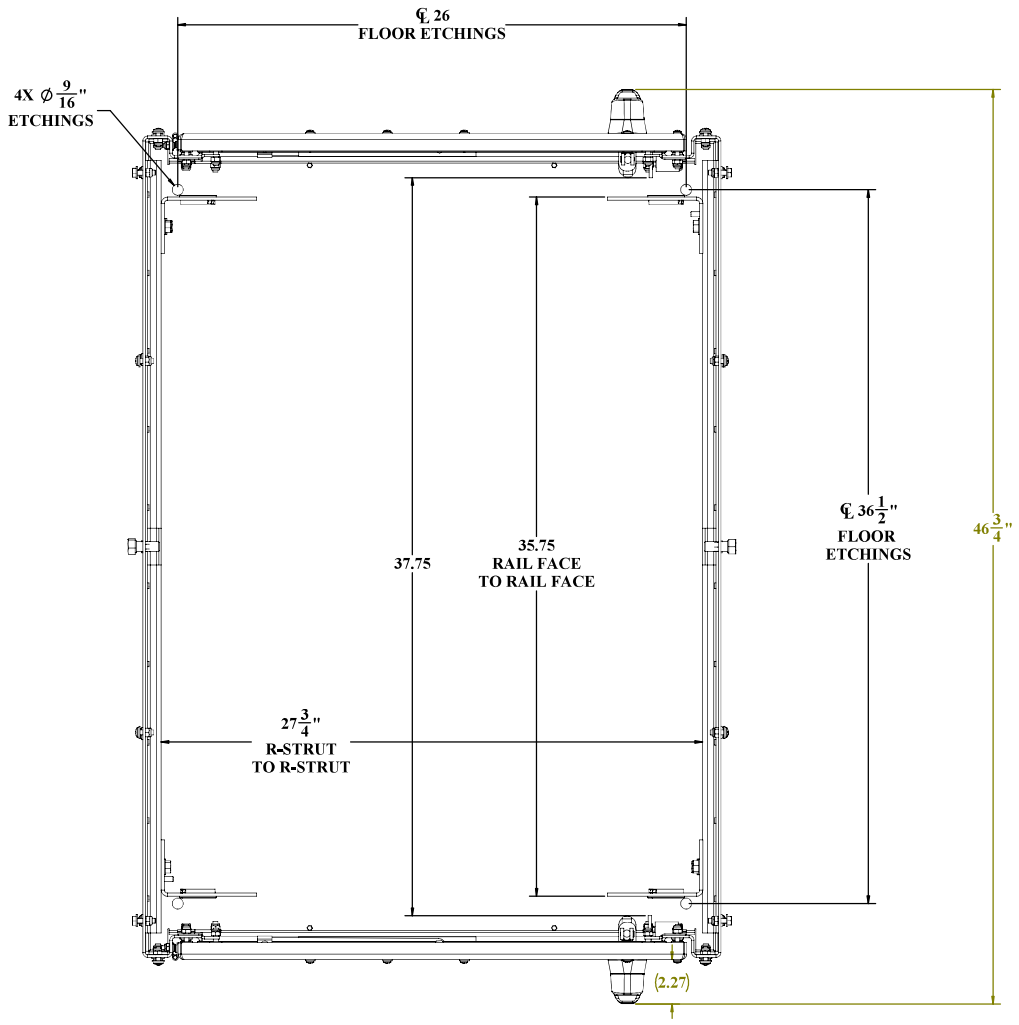

TOP VIEW
NO CEILLING OR ALLUMASHIELD SHOWN

PROPRIETARY AND CONFIDENTIAL.
THE INFORMATION CONTAINED IN THIS DRAWING IS THE SOLE PROPERTY OF DDB Unlimited, INC. ANY
REPRODUCTION IN PART OR AS A WHOLE WITHOUT THE WRITTEN PERMISSION OF DDB Unlimited, INC. IS PROHIBITED.

DDB FORM 7.1-REV K 08/03/17

WEB DRAWING (NOT FOR FABRICATION)

UNLESS OTHERWISE SPECIFIED:	DDB Unlimited Inc.		
DIMENSIONS ARE IN INCHES ANGULAR: ±1° FRACTIONAL: ±1/32 TWO PLACE DECIMAL: ±.010 THREE PLACE DECIMAL: ±.005 ALL EDGES ⌀.005Ⓜ	DDX-UL50E-CLOSED WOD, CLOSED, DDX-UL50		
	SIZE: D	Cage Code: 385Y5	DWG. NO.: 02063 REV: A
MATERIAL: 16GA-HR-S .125" ASTM-A1011-SS	SCALE: 1:16	WEIGHT: 107 lbs.	SHEET 2 OF 3
PAINT:	DO NOT SCALE DRAWING		

File Location: (DDB)\EPDM Vault\
C:\DDB\DR Requests\Customers\DDB WEB DWG\WOD Family UL50 WEB\WOD-78DDX-UL50 WEB\

WEB DRAWING (NOT FOR FABRICATION)

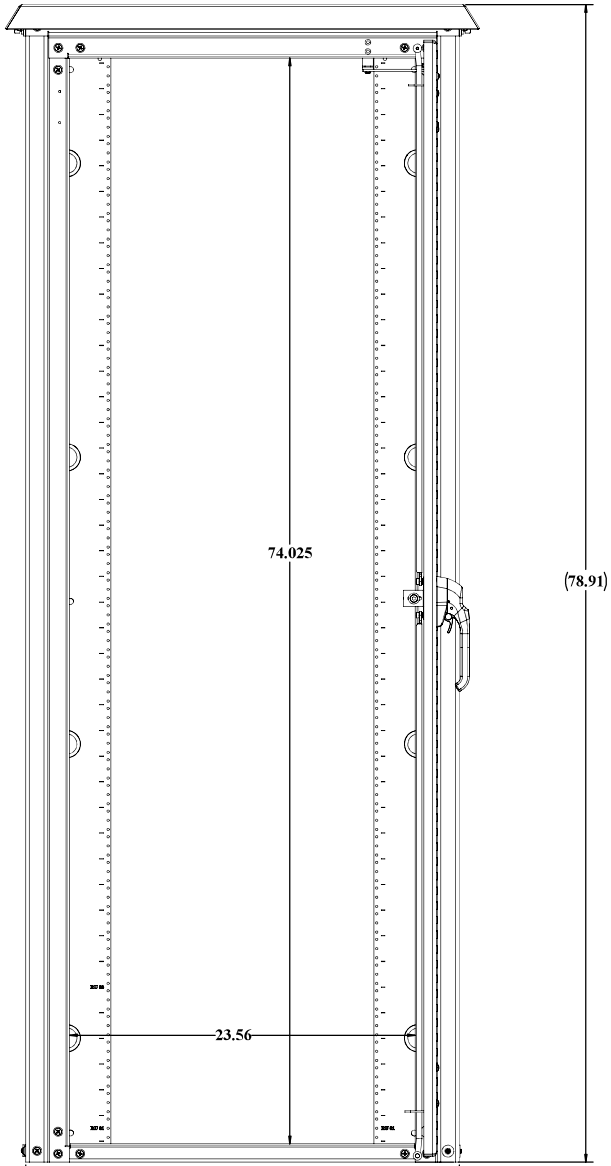

BACK VIEW
GASKET NOT SHOWN

WEB DRAWING (NOT FOR FABRICATION)

UNLESS OTHERWISE SPECIFIED: DIMENSIONS ARE IN INCHES. ANGULAR: FRACTIONAL/NO DECIMAL: TWO PLACE DECIMAL: THREE PLACE DECIMAL: ALL HOLES ⌀	*DDB Unlimited Inc.* WOD-78DDX-UL50E WOD, 78"H, DDX-UL50
MATERIAL: 5052-H32-0.125" ASTM-B209-94	SIZE: D · Cage Code: 385Y5 · DWG. NO.: 02063 · REV: A
PAINT: RAMONE VOGEL SEMI-GLOSS TEXTURE 154650	SCALE: 1:16 · WEIGHT: 270 lbs. · SHEET 3 OF 3
DO NOT SCALE DRAWING	

PROPRIETARY AND CONFIDENTIAL
THE INFORMATION CONTAINED IN THIS DRAWING IS THE SOLE PROPERTY OF DDB Unlimited, INC. ANY REPRODUCTION IN PART OR AS A WHOLE WITHOUT THE WRITTEN PERMISSION OF DDB Unlimited, INC. IS PROHIBITED.

DDB FORM 7.1-REV.K 08/02/17

File Location: (DDB) EPDM Vault)
C:\DDB\DR Requests\Customers\DDB WEB DWG\WOD Family UL50 WEB\WOD-78DDX-UL50 WEB\

DDB UNLIMITED®

An ISO 9001 Certified company

SOD Series

SOD-102420

Made in America

Believing in American Craftsmanship

15 YEAR WARRANTY

Why Choose the SOD Series?

The SOD-102420 enclosure is a top choice for outdoor equipment racking, offering unparalleled versatility. Constructed with our Alumiflex® material, it is notably lighter than steel yet strong enough to easily rack the heaviest equipment. The SOD series boasts easy installation for pad, pole, and wall mounting options allowing these boxes to install in any environment for any application. With standard features like a pad locking system, a venting system with a reusable filter, and a built-in solar cap to manage heat loads, the value quickly adds up. Adding to the flexibility, the SOD series is configurable to be used for indoor and outdoor applications and has an extensive list of available options, including climate controls, and electrical and cable entry solutions. All of this comes with the industry's best lead times, unmatched warranty, and competitive pricing. As expected, the DDB SOD series sets the mark as a design leader that is versatile and scalable to meet a wide array of situations. Contact our knowledgeable sales team for more information.



Features

15 Year Warranty

0.125" Aluminum Construction

Pad Locking System

Front Door Access

Heavy Duty Out-Door Construction

Stainless Steel External Hardware/Hinge

Cream Powder-Coat, Standard

Flexible and Scalable

Quick Shipping

Application Types

Telecommunications
Wireless/Broadband
Fiber Optics
Back Haul
Small Cell/DAS
Utility
Base Station
Military
Trailer-Based Communications
Wi-Fi
LTEE/4G/5G



Environmental & Safety Ratings:

✓ NEMA 3R as shown; NEMA 4 and 4X configurable

(unlisted to environmental rating)

✓ **UL listed 50/50E Available (not shown)**

Weight and Dimensions

Approximate Exterior Enclosure Dimensions:

12”H x 24”W x 24”D

Shipping Dimensions:

30”D x 30”W x 16”H - Boxed

Approximate Shipping Weight:

50 lbs.

2301 S. HWY 77 Pauls Valley, OK 73075
T: (405) -655-2876
sales@ddbunlimited.com www.ddbunlimited.com

DDB UNLIMITED®

An ISO 9001 Certified company

SOD Series

SOD-102420

Made in America

Believing in American Craftsmanship

15 YEAR WARRANTY

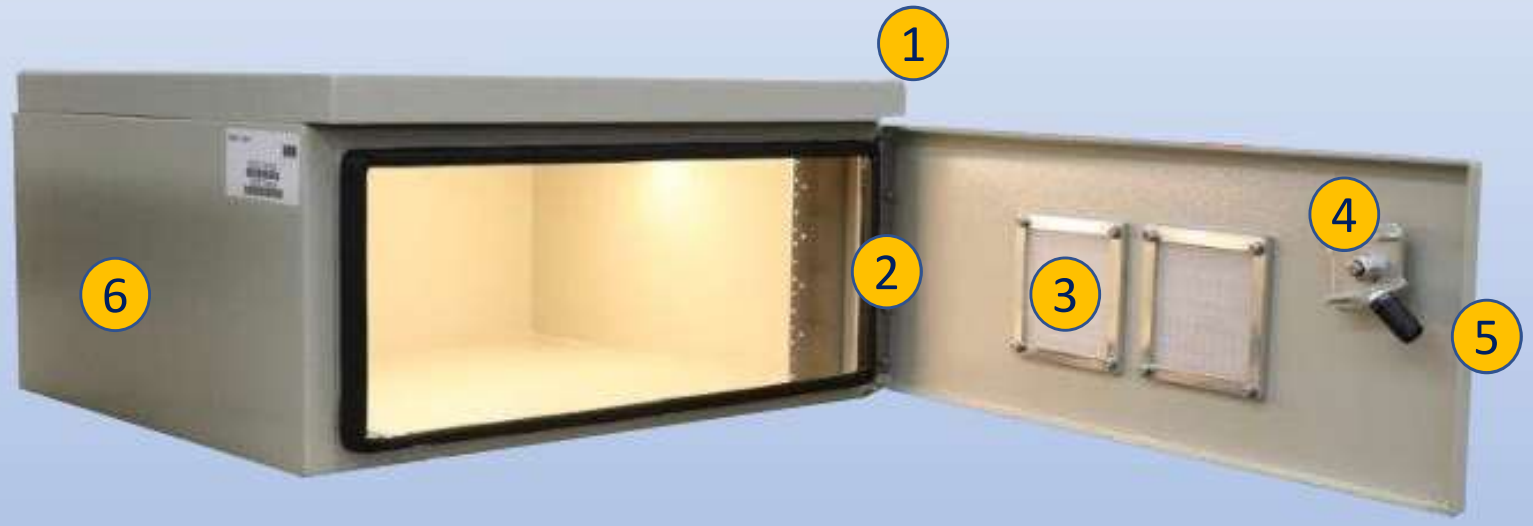

Features

1. Solar Cap
2. Stainless Steel Door Hinge
3. Reusable Vent Filters
4. Pad Locking System
5. 0.125" Aluminum Construction
6. Powder-Coat Cream

Scan this code for Accessories

2301 S. HWY 77 Pauls Valley, OK 73075
T: (405)-665-2876
sales@ddbunlimited.com www.ddbunlimited.com

REVISIONS		
REV.	DESCRIPTION	DATE
A	WEB DWG PER DR 01372	4/15/16
B	UPDATING DRAWING PER DR-02619	5/17/2021
L	UPDATED DRAWING TO MATCH PRODUCTION DRAIWNG	5/27/2022
M	REMOVED BOTTOM VIEW SHEET #1. UPDATED SHEET FORMATS	8/26/2024

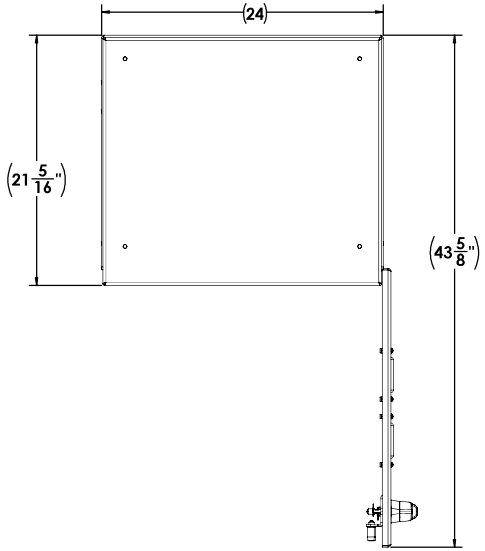

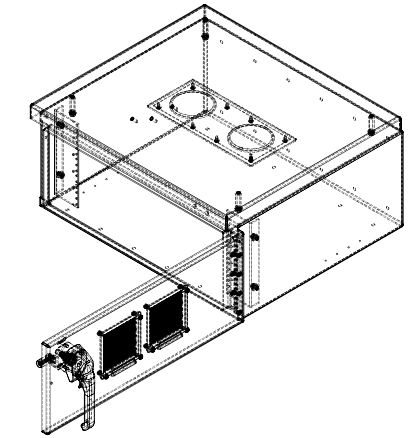

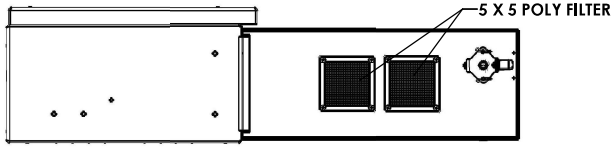

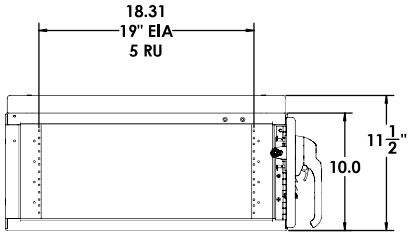

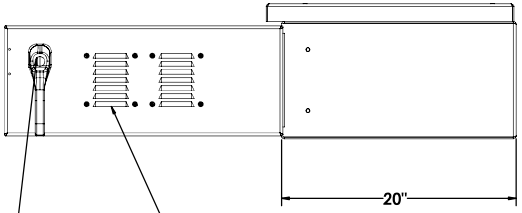

3 POINT PADLOCKING HANDLE

LOUVERS AND FILTERS.

UNLESS OTHERWISE SPECIFIED:	DDB Unlimited Inc.			
DIMENSIONS ARE IN INCHES ANGULAR: ±1° FRACTIONAL: NO DECIMAL: ±1/32 TWO PLACE DECIMAL: ±0.010 TWO PLACE DECIMAL: ±0.005 THREE PLACE DECIMAL: ±0.010 ALL HOLES ±0.005	SOD-102420 SOD-102420SOD-102420			
	SIZE	Cage Code:	DWG. NO.:	REV
	D	3S5Y5	01380	M
MATERIAL: 5052-H32-0.125 ASTM B209-04	SCALE: 1:5	WEIGHT: 36 lbs.		SHEET 1 OF 2
PAINT: DIAMOND VOGEL, HIGH GLOSS TEXTURE 874920				
DO NOT SCALE DRAWING				

DDB FORM 7.1-REV.K 08/03/17

UNCLASSIFIED PUBLIC

File Location: (DDB)(EPDM Vault)
C:\DDB\DR Requests\Customers\DDB WEB DWG\SOD-XXXX\SOD-102420\

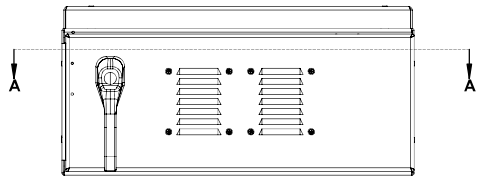

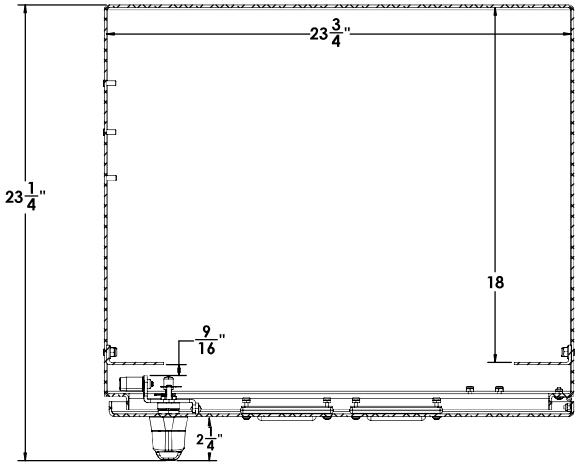

SECTION A-A
SCALE 1 : 3

UNLESS OTHERWISE SPECIFIED:	DDB Unlimited Inc.			
DIMENSIONS ARE IN INCHES ANGULAR: ±1° FRACTIONAL: NO DECIMAL: ±1/32 TWO PLACE DECIMAL: ±.010 THREE PLACE DECIMAL: ±.005 ALL HOLES ±.003	SOD-102420			
	SIZE: D	Cage Code: 385Y5	DWG. NO.: 01380	REV: M
MATERIAL: 5052-H32 0.125 ASTM B209-04	SCALE: 1:8	WEIGHT: 36 lbs.		SHEET 2 OF 2
PAINT: SHADOW COOL BEIGE GLOSS TEXTURE LS4028				
DO NOT SCALE DRAWING				

DDB FORM 7.1-REV.K 08/02/17

UNCLASSIFIED PUBLIC
THE INFORMATION CONTAINED IN THIS DRAWING IS THE SOLE PROPERTY OF DDB Unlimited, INC. ANY
REPRODUCTION IN PART OR AS A WHOLE WITHOUT THE WRITTEN PERMISSION OF DDB Unlimited, INC. IS PROHIBITED.

File Location: (DDB)(EPDM Vault)
C:\DDB\DR Requests\Customers\DDB WEB DWG\SOD-XXXX\SOD-102420\

An ISO 9001 Certified company

SOD Series

SOD-192420

Made in America

Believing in American Craftsmanship

15 YEAR WARRANTY

Why Choose the SOD Series?

The SOD-192420 enclosure is a top choice for outdoor equipment racking, offering unparalleled versatility. Constructed with our Alumiflex® material, it is notably lighter than steel yet strong enough to easily rack the heaviest equipment. The SOD series boasts easy installation for pad, pole, and wall mounting options allowing these boxes to install in any environment for any application. With standard features like a 3-point locking system, a venting system with a reusable filter, and a built-in solar cap to manage heat loads, the value quickly adds up. Adding to the flexibility, the SOD series is configurable to be used for indoor and outdoor applications and has an extensive list of available options, including climate controls, and electrical and cable entry solutions. All of this comes with the industry's best lead times, unmatched warranty, and competitive pricing. As expected, the DDB SOD series sets the mark as a design leader that is versatile and scalable to meet a wide array of situations. Contact our knowledgeable sales team for more information.



Features

15 Year Warranty

0.125" Aluminum Construction

3-Point Locking System

Front Door Access

Heavy Duty Out-Door Construction

Stainless Steel External Hardware/Hinge

Cream Powder-Coat, Standard

Flexible and Scalable

Quick Shipping

Application Types

Telecommunications
Wireless/Broadband
Fiber Optics
Back Haul
Small Cell/DAS
Utility
Base Station
Military
Trailer-Based Communications
Wi-Fi
LTEE/4G/5G



Environmental & Safety Ratings:

- ✓ NEMA 3R as shown; NEMA 4 and 4X configurable (unlisted to environmental rating)
- ✓ **UL listed 50/50E Available (not shown)**

Weight and Dimensions

Approximate Exterior Enclosure Dimensions:

22”H x 24”W x 24”D

Shipping Dimensions:

42"D x 32”W x 29”H - Palletized

Approximate Shipping Weight:

85 lbs.

2301 S. HWY 77 Pauls Valley, OK 73075
T: (405) -655-2876
sales@ddbunlimited.com www.ddbunlimited.com

DDB UNLIMITED®

An ISO 9001 Certified company

SOD Series

SOD-192420

Made in America

Believing in American Craftsmanship

15 YEAR WARRANTY



Features

1. Solar Cap
2. Stainless Steel Door Hinge
3. Reusable Vent Filters
4. 3-Point Locking System
5. 0.125" Aluminum Construction
6. Powder-Coat Cream

Scan this code for Accessories

2301 S. HWY 77 Pauls Valley, OK 73075
T: (405)-665-2876
sales@ddbunlimited.com www.ddbunlimited.com

REVISIONS		
REV.	DESCRIPTION	DATE
A	WEB DRAWING PER DR 01367	4/12/16
B	UPDATED PER DR-02620	5/17/2021
L	UPDATED DRAWING TO MATCH PRODUCTION DRAWING	5/27/2022
M	REMOVED BOTTOM VIEEW SHEET#1. ADDED DIMS TO SHEET #2 PER DR-03252	8/26/2024

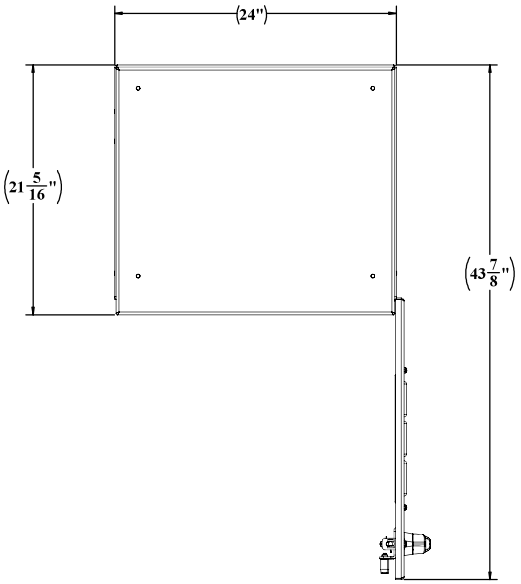

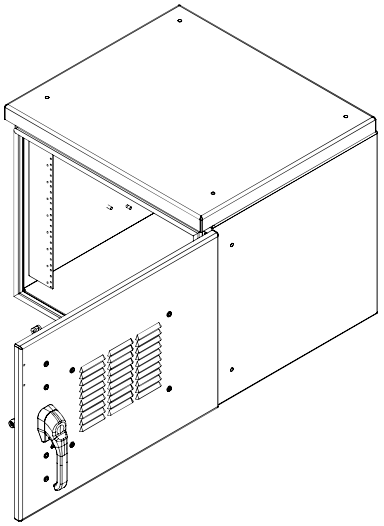

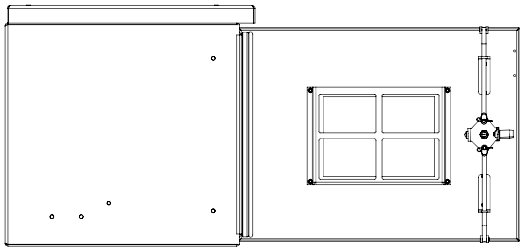

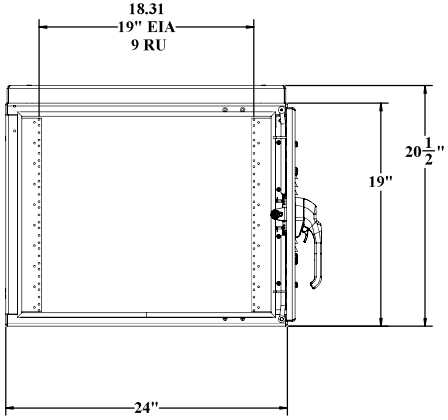

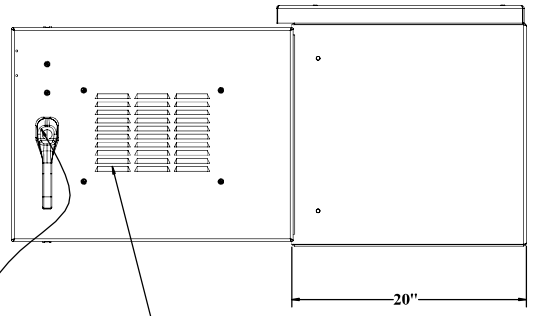

3 POINT PADLOCKING HANDLE

LOUVERS AND FILTER WITH BRACKET.

UNLESS OTHERWISE SPECIFIED:	DDB Unlimited Inc.			
DIMENSIONS ARE IN INCHES ANGULAR: ±1° FRACTIONAL: NO DECIMAL: ±1/16 TWO PLACE DECIMAL: ±.010 TWO PLACE DECIMAL: ±.005 THREE PLACE DECIMAL: ±.010 ALL HOLES ±.003	SOD-192420 SOD-192420SOD-192420			
	SIZE	Cage Code:	DWG. NO.:	REV
	D	3S5Y5	01367	M
MATERIAL: 5052-H32-0.125 ASTM B209-04	SCALE: 1:5	WEIGHT: 49 lbs.		SHEET 1 OF 2
PAINT: DIAMOND VOGEL, BEIGE GLOSS TEXTURE #34920				
DO NOT SCALE DRAWING				

DDB FORM 7.1-REV.K 08/03/17

UNCLASSIFIED PUBLIC

File Location: (DDB)(EPDM Vault)
C:\DDB\DR Requests\Customers\DDB WEB DWG\SOD-XXXX\SOD-192420\

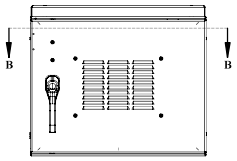

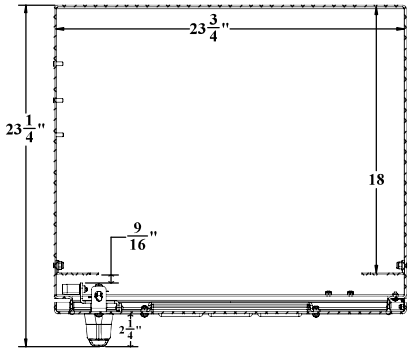

SECTION B-B
SCALE 1 : 4

UNLESS OTHERWISE SPECIFIED:	DDB Unlimited Inc.			
DIMENSIONS ARE IN INCHES ANGULAR: ±1° FRACTIONAL: ±1/64 TWO PLACE DECIMAL: ±.010 THREE PLACE DECIMAL: ±.005 ALL HOLES ±.003	SOD-192420			
	SIZE	Cage Code:	DWG. NO.:	REV
	D	3S5Y5	01367	M
MATERIAL: 5052-H32-0.125 ASTM B209-04	SCALE: 1:8	WEIGHT: 49 lbs.		SHEET 2 OF 2
PAINT: DIAMOND VOGEL, BEIGE GLOSS TEXTURE 874920				
DO NOT SCALE DRAWING				

DDB FORM 7.1-7 REV.K 08/02/17

UNCLASSIFIED PUBLIC

File Location: (DDB)(EPDM Vault)
C:\DDB\DR Requests\Customers\DDB WEB DWG\SOD-XXXX\SOD-192420\

DDB UNLIMITED®

An ISO 9001 Certified company

SOD Series

SOD-302420

Made in America

Believing in American Craftsmanship

15 YEAR WARRANTY

Why Choose the SOD Series?



The SOD-302420 enclosure is a top choice for outdoor equipment racking, offering unparalleled versatility. Constructed with our Alumiflex® material, it is notably lighter than steel yet strong enough to easily rack the heaviest equipment. The SOD series boasts easy installation for pad, pole, and wall mounting options allowing these boxes to install in any environment for any application. With standard features like a 3-point locking system, a venting system with a reusable filter, and a built-in solar cap to manage heat loads, the value quickly adds up. Adding to the flexibility, the SOD series is configurable to be used for indoor and outdoor applications and has an extensive list of available options, including climate controls, and electrical and cable entry solutions. All of this comes with the industry's best lead times, unmatched warranty, and competitive pricing. As expected, the DDB SOD series sets the mark as a design leader that is versatile and scalable to meet a wide array of situations. Contact our knowledgeable sales team for more information.

Application Types

Telecommunications
Wireless/Broadband
Fiber Optics
Back Haul
Small Cell/DAS
Utility
Base Station
Military
Trailer-Based Communications
Wi-Fi
LTEE/4G/5G



Environmental & Safety Ratings:

✓ NEMA 3R as shown; NEMA 4 and 4X configurable

(unlisted to environmental rating)

✓ **UL listed 50/50E Available (not shown)**

Features

15 Year Warranty
0.125" Aluminum Construction
3-Point Locking System
Front Door Access
Heavy Duty Out-Door Construction
Stainless Steel External Hardware/Hinge
Cream Powder-Coat, Standard
Flexible and Scalable
Quick Shipping

Weight and Dimensions

Approximate Exterior Enclosure Dimensions:
32”H x 24”W x 24"D
Shipping Dimensions:
42”D x 32”W x 40”H - Palletized
Approximate Shipping Weight:
96 lbs.

2301 S. HWY 77 Pauls Valley, OK 73075
T: (405) -655-2876
sales@ddbunlimited.com www.ddbunlimited.com

DDB UNLIMITED®

An ISO 9001 Certified company

SOD Series

SOD-302420

Made in America

Believing in American Craftsmanship

15 YEAR WARRANTY

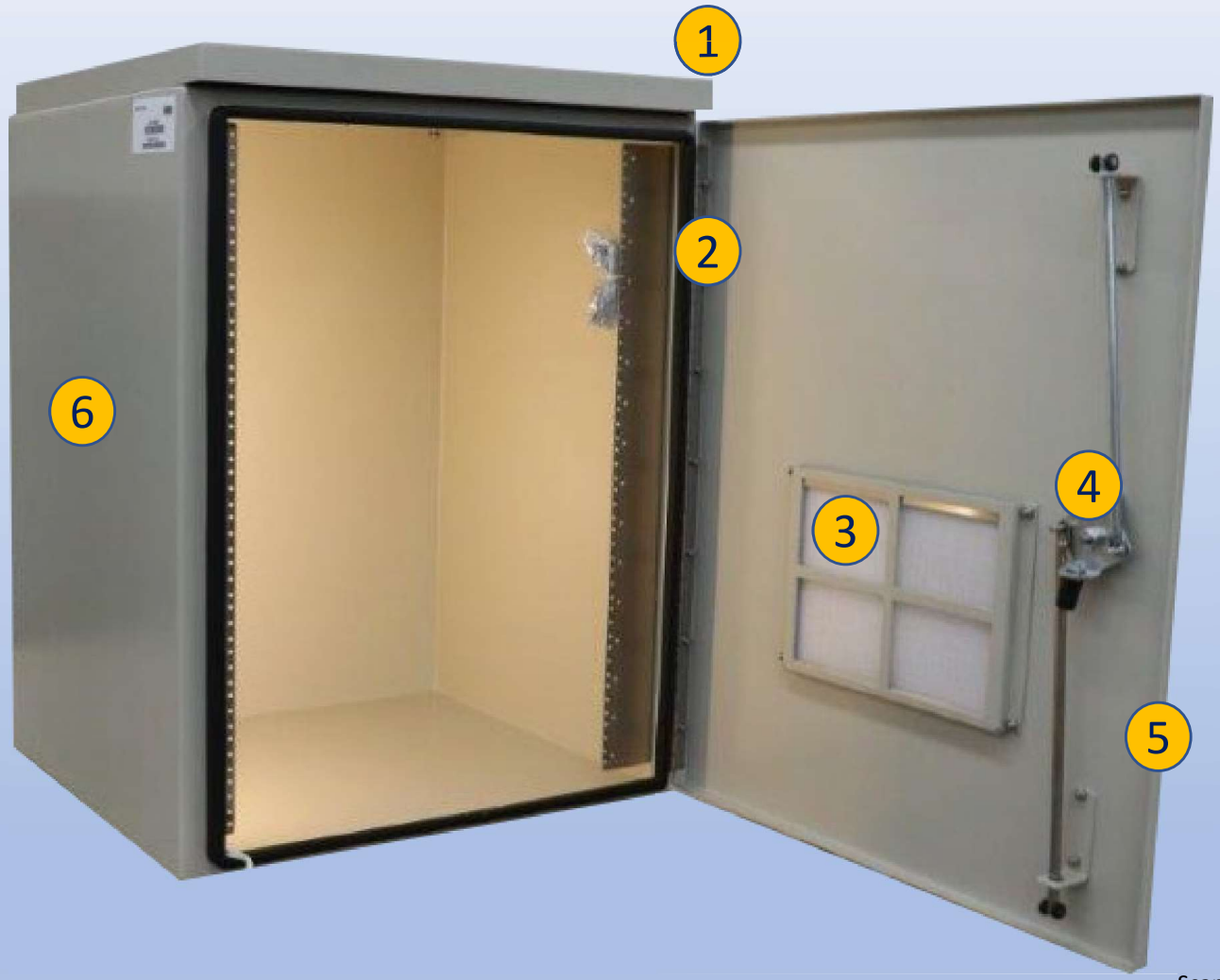

Features

1. Solar Cap
2. Stainless Steel Door Hinge
3. Reusable Vent Filters
4. 3-Point Locking System
5. 0.125" Aluminum Construction
6. Powder-Coat Cream

Scan this code for Accessories

2301 S. HWY 77 Pauls Valley, OK 73075
T: (405)-665-2876
sales@ddbunlimited.com www.ddbunlimited.com

REVISIONS		
REV.	DESCRIPTION	DATE
A	WEB DRAWING PER DR-01382	4/26/16
B	UPDATED PER DR-02621	5/17/2021
L	UPDATED DRAWING TO MATCH PRODUCTION DRAWING	5/27/2022
M	UPDAED SHEET FORMATS AND REMOVED BOTTOM VIEW, ADDED EXTRA DIM ON SHEET TWO PER NEW DR-03253	8/27/2024

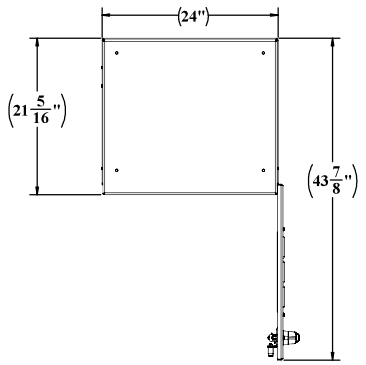

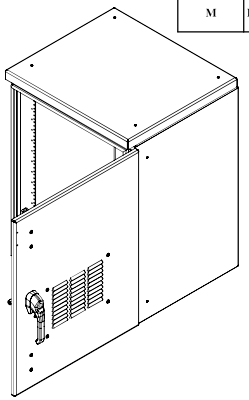

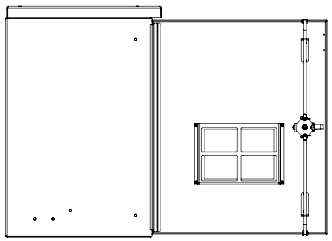

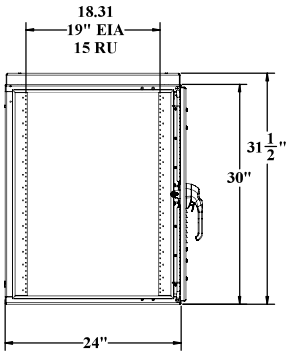

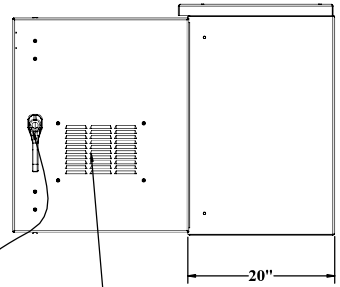

3 POINT PADLOCKING HANDLE

LOUVERS AND FILTER WITH BRACKET

UNLESS OTHERWISE SPECIFIED:	DDB Unlimited Inc.		
DIMENSIONS ARE IN INCHES ANGULAR: ±1° FRACTIONAL: NO DECIMAL: ±1/16 TWO PLACE DECIMAL: ±.010 TWO PLACE DECIMAL: ±.005 THREE PLACE DECIMAL: ±.010 ALL HOLES ±.005	SOD-302420 SOD-302420SOD-302420		
	SIZE: D	Cage Code: 385Y5	DWG. NO.: 01382 REV: M
MATERIAL: 5052-H32-0.125 ASTM B209-04	SCALE: 1:8	WEIGHT: 62 lbs.	SHEET 1 OF 2
PAINT: DIAMOND VOGEL, BEIGE GLOSS TEXTURE 874920			
DO NOT SCALE DRAWING			

DDB FORM 7.1-REV.K 08/02/17

UNCLASSIFIED PUBLIC

File Location: (DDB)(EPDM Vault)
C:\DDB\DR Requests\Customers\DDB WEB DWG\SOD-XXXX\SOD-302420\

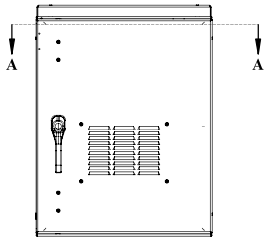

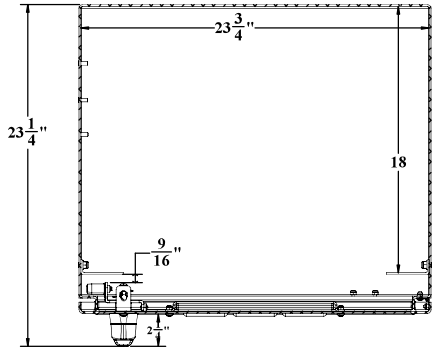

SECTION A-A
SCALE 1 : 4

UNLESS OTHERWISE SPECIFIED:	DDB Unlimited Inc.			
DIMENSIONS ARE IN INCHES ANGULAR: ±1° FRACTIONAL/NO DECIMAL: ±1/16 TWO PLACE DECIMAL: ±.010 THREE PLACE DECIMAL: ±.005 ALL HOLES ±.003	SOD-302420			
	SIZE	Cage Code:	DWG. NO.:	REV
	D	3S5Y5	01382	M
MATERIAL: 5052-H32-0.125 ASTM B209-04	SCALE: 1:8	WEIGHT: 62 lbs.		SHEET 2 OF 2
PAINT: DIAMOND VOGEL, BEIGE GLOSS TEXTURE E54920				
DO NOT SCALE DRAWING				

DDB FORM 7.1-71 REV.K 08/02/17

UNCLASSIFIED PUBLIC

File Location: (DDB)(EPDM Vault)
C:\DDB\DR Requests\Customers\DDB WEB DWG\SOD-XXXX\SOD-302420\

DDB UNLIMITED®

An ISO 9001 Certified company

SOD Series

SOD-372420

Made in America

Believing in American Craftsmanship

15 YEAR WARRANTY

Why Choose the SOD Series?



The SOD-372420 enclosure is a top choice for outdoor equipment racking, offering unparalleled versatility. Constructed with our Alumiflex® material, it is notably lighter than steel yet strong enough to easily rack the heaviest equipment. The SOD series boasts easy installation for pad, pole, and wall mounting options allowing these boxes to install in any environment for any application. With standard features like a 3-point locking system, a venting system with a reusable filter, and a built-in solar cap to manage heat loads, the value quickly adds up. Adding to the flexibility, the SOD series is configurable to be used for indoor and outdoor applications and has an extensive list of available options, including climate controls, and electrical and cable entry solutions. All of this comes with the industry's best lead times, unmatched warranty, and competitive pricing. As expected, the DDB SOD series sets the mark as a design leader that is versatile and scalable to meet a wide array of situations. Contact our knowledgeable sales team for more information.

Features

15 Year Warranty

0.125" Aluminum Construction

3-Point Locking System

Front Door Access

Heavy Duty Out-Door Construction

Stainless Steel External Hardware/Hinge

Cream Powder-Coat, Standard

Flexible and Scalable

Quick Shipping

Application Types

Telecommunications
Wireless/Broadband
Fiber Optics
Back Haul
Small Cell/DAS
Utility
Base Station
Military
Trailer-Based Communications
Wi-Fi
LTEE/4G/5G



Environmental & Safety Ratings:

✓ NEMA 3R as shown; NEMA 4 and 4X configurable

(unlisted to environmental rating)

✓ **UL listed 50/50E Available (Not Shown)**

Weight and Dimensions

Approximate Exterior Enclosure Dimensions:

39”H x 24”W x 18”D

Shipping Dimensions:

42”D x 32”W x 47"H - Palletized

Approximate Shipping Weight:

104 lbs.

2301 S. HWY 77 Pauls Valley, OK 73075
T: (405) -655-2876
sales@ddbunlimited.com www.ddbunlimited.com

DDB UNLIMITED®

An ISO 9001 Certified company

SOD Series

SOD-372420

Made in America

Believing in American Craftsmanship

15 YEAR WARRANTY



Features

1. Solar Cap
2. Stainless Steel Door Hinge
3. Reusable Vent Filters
4. 3-Point Locking System
5. 0.125" Aluminum Construction
6. Powder-Coat Cream

Scan this code for Accessories

2301 S. HWY 77 Pauls Valley, OK 73075
T: (405)-665-2876
sales@ddbunlimited.com www.ddbunlimited.com

REVISIONS		
REV.	DESCRIPTION	DATE
A	Web Drawing per DR-01368 REV F IS THE CURRENT WEB DRAWING NO PREVIOUS DRAWINGS HAVE BEEN MADE TO THIS REV F IS BEING FABRICATED AT THIS TIME	4/12/16
B	UPDATING PER DR-02622	5/17/2021
L	UPDATED DRAWING TO MATCH PRODUCTION DRAWING	5/27/2022
M	UPDATED SHEET FORMAT AND ADDED EXTRA DIM TO SHEET #2 PER DR-03254, ISSUES WITH SHEET FORMAT HAS BEEN SENT OUT FOR REPAIRS. 09/03/2024	8/27/2024

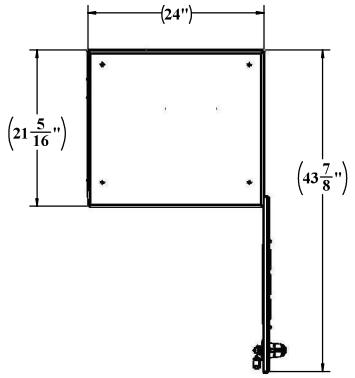

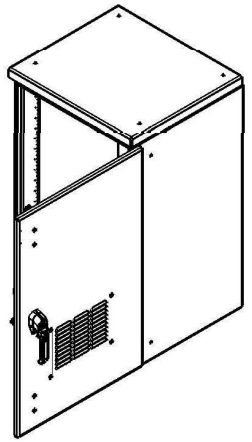

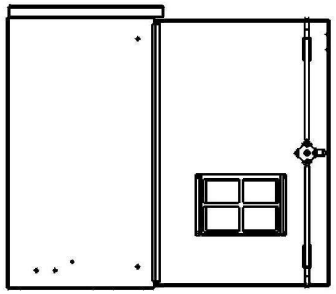

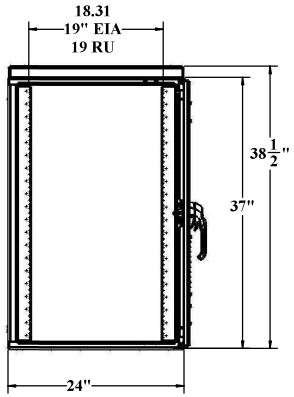

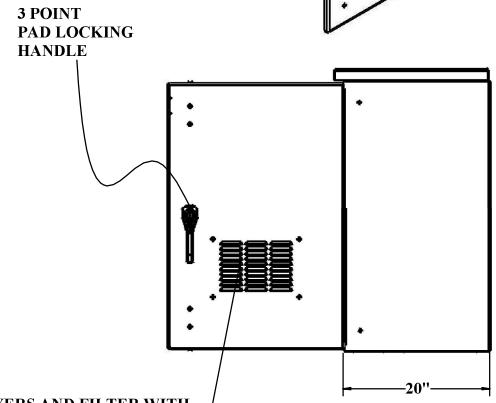

UNLESS OTHERWISE SPECIFIED:	DDB Unlimited Inc.			
DIMENSIONS ARE IN INCHES ANGULAR: ±1° FRACTIONAL: NO DECIMAL: ±1/16 TWO PLACE DECIMAL: ±.010 TWO PLACE DECIMAL: ±.005 THREE PLACE DECIMAL: ±.0030 ALL HOLES ±.003	SOD-372420 SOD-372420			
	SIZE	Cage Code:	DWG. NO.:	REV
	D	3S5Y5	01368	M
MATERIAL: 5052-H32-0.125 ASTM B209-04	SCALE: 1:8	WEIGHT: 72 lbs.	SHEET 1 OF 2	
PAINT: DIAMOND VOGEL, BEIGE GLOSS TEXTURE #34920				
DO NOT SCALE DRAWING				

DDB FORM 7.1-REV K 08/03/17

UNCLASSIFIED PUBLIC

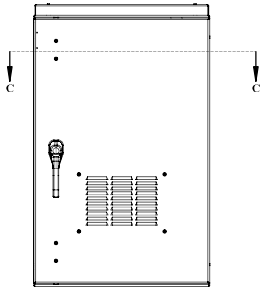

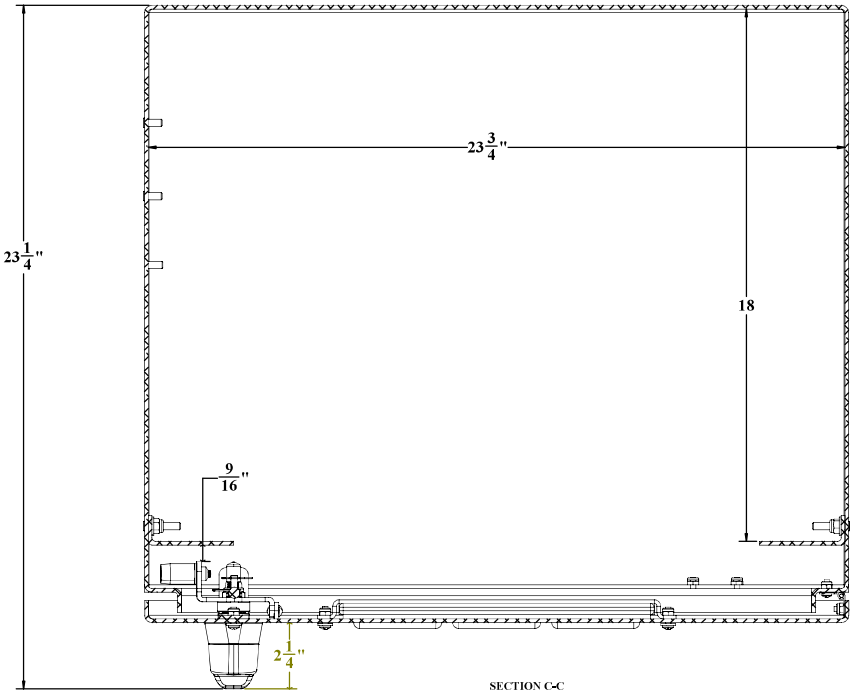

SECTION C-C

UNLESS OTHERWISE SPECIFIED:	DDB Unlimited Inc.			
DIMENSIONS ARE IN INCHES ANGULAR: ±1° FRACTIONAL: ±1/64 TWO PLACE DECIMAL: ±.010 THREE PLACE DECIMAL: ±.005 ALL HOLES ±.003	SOD-372420			
	SIZE	Cage Code:	DWG. NO.:	REV
	D	3S5Y5	01368	M
MATERIAL: 5052-H32 0.125 ASTM B209-04	SCALE: 1:2	WEIGHT: 72 lbs.		SHEET 2 OF 2
PAINT: DIAMOND VOGEL, BEIGE GLOSS TEXTURE 874920				
DO NOT SCALE DRAWING				

DDB FORM 7.1-REV.K 08/02/17

UNCLASSIFIED PUBLIC

File Location: (DDB)\EPDM Vault\
C:\DDB\DR Requests\Customers\DDB WEB DWG\SOD-XXXX\SOD-372420\

An ISO 9001 Certified company

SBS Series

SBS-14127C

Made in America

Believing in American Craftsmanship

15 YEAR WARRANTY

Why Choose the SBS Series?



The SBS-14127C outdoor enclosure is a top choice for indoor and outdoor needs. Constructed with our Alumiflex® material, it is notably lighter than steel yet strong enough to easily support the heaviest equipment. The SBS series has an updated design, including a deeper compartment for more equipment space and improved door compression to keep the weather out. The SBS series can be used as an electrical panel, battery storage, communication cabinet, and more. Standard features include an aluminum removable back-plate, 1/4 turn-key locks, and rugged aluminum construction. Configurable for indoor or outdoor applications the available accessories add the ability to customize to your specific application with various mounting bracket types, including climate controls, venting options, and electrical/cable entry solutions. Every SBS enclosure includes DDB's unmatched warranty, the industry's best lead times, and competitive pricing. As expected, the DDB SBS series sets the mark as a design leader that is versatile and scalable to meet a wide array of situations. Contact our knowledgeable sales team for more information.

Application Types

Telecommunications
Wireless/Broadband
Fiber Optics
Small Cell/DAS
Public Safety
Utility
Military
Trailer-Based Communications
Wi-Fi
Video/Monitoring
Oil/Gas
Control Panels



Environmental & Safety Ratings:

- ✓ NEMA 4 (shown)
- ✓ 4X Available (not shown)

Features

15 Year Warranty
.125” Aluminum Construction
Stainless Steel External Hardware/Hinge
Aluminum Removable Back-Plate
Cream Powder Coat, Standard
¼ Turn-Key Locks
Flexible and Scalable
Quick Shipping

Weight and Dimensions

Approximate Exterior Enclosure Dimensions:
14”H x 12”W x 8”D
Shipping Dimensions:
24”D x 24”W x 12”H- Boxed
Approximate Shipping Weight:
20 lbs.

2301 S. HWY 77 Pauls Valley, OK 73075
T: (405)-665-2876
sales@ddbunlimited.com www.ddbunlimited.com

DDB UNLIMITED®

An ISO 9001 Certified company

SBS Series

SBS-14127C

Made in America

Believing in American Craftsmanship

15 YEAR WARRANTY





Features

1. Powder-Coat Cream
2. 0.125" Aluminum Construction
3. ¼ Turn-Key Locks
4. Continuous Hinge
5. Removable Aluminum Backplate; Optional Plywood Backplate

Scan this code for Accessories

2301 S. HWY 77 Pauls Valley, OK 73075
T: (405)-665-2876
sales@ddbunlimited.com www.ddbunlimited.com

WEB DRAWING (NOT FOR FABRICATION)

REVISIONS		
REV.	DESCRIPTION	DATE
A	SBS WEB DRAWING CREATED PER DR-02301	5/7/2020
F	THE WEBSITE DRAWINGS WERE NEVER UPDATED FROM B,C,D,E. THIS REVISION WILL UPDATED TO THE CURRENT REV F PRODUCTION DRWING.	5/6/2022

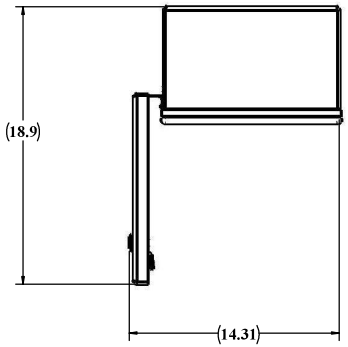

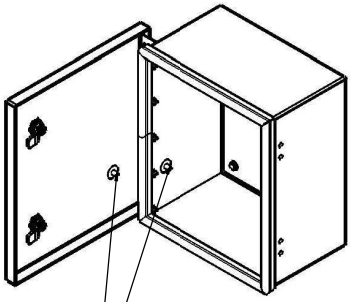

GROUNDING STUDS

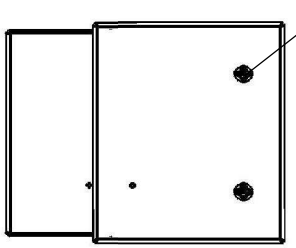

QUARTER TURN LOCKING

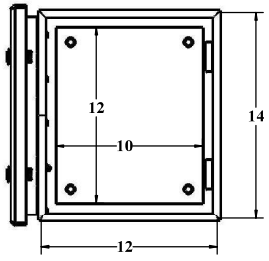

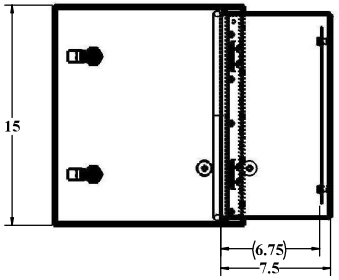

WEB DRAWING (NOT FOR FABRICATION)

UNLESS OTHERWISE SPECIFIED:	*DDB Unlimited Inc.*		
DIMENSIONS ARE IN INCHES ANGULAR: ±1° FRACTIONAL: ±1/64 TWO PLACE DECIMAL: ±.010 THREE PLACE DECIMAL: ±.005 ALL HOLES ±.003Ø	SBS-14127 SBS-14127 (Non UL)SBS-14127		
	SIZE: D	Cage Code: 3S5Y5	DWG. NO.: 02301 REV: F
MATERIAL: 5052-H32-0.125 ASTM B209-04			
PAINT: DIAMOND VOGEL, BEIGE GLOSS TEXTURE #14920	SCALE: 1:8	WEIGHT: 11.28 lbs.	SHEET 1 OF 2
DO NOT SCALE DRAWING			

UNCLASSIFIED PUBLIC

File Location: (DDB)(EPDM Vault)
C:\DDB\DR Requests\Customers\DDB WEB DWG\SBS-Family\SBS-14127\

DDB FORM 7.1-REV. K 08/02/17

WEB DRAWING (NOT FOR FABRICATION)

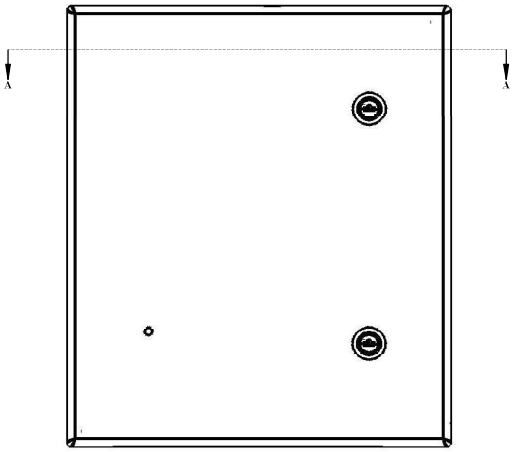

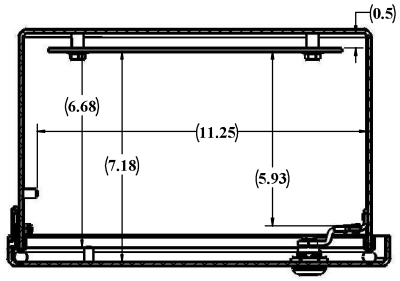

SECTION A-A
SCALE 1 : 2

WEB DRAWING (NOT FOR FABRICATION)

UNLESS OTHERWISE SPECIFIED:	DDB Unlimited Inc.			
DIMENSIONS ARE IN INCHES ANGULAR: ±1° FRACTIONAL: ±1/32 TWO PLACE DECIMAL: ±.010 THREE PLACE DECIMAL: ±.005 ALL EDGES ▼ 125	SBS-14127 (closed) SBS-14127 (Non UL)			
	SIZE	Cage Code:	DWG. NO.:	REV
	D	3S5Y5	02301	F
MATERIAL: 5052-H32 0.125" ASTM B209-04	SCALE: 1:8	WEIGHT: 11.28 lbs.		SHEET 2 OF 2
PAINT: DIAMOND VOGEL HELIX 63-035 TEXTURE DM450				
DO NOT SCALE DRAWING				

DDB FORM 7.1-REV K 08/03/17

UNCLASSIFIED PUBLIC

File Location: (DDB)(EPDM Vault)
C:\DDB\DR Requests\Customers\DDB WEB DWG\SBS-Family\SBS-14127\

An ISO 9001 Certified company

SBS Series

SBS-24168C

Made in America

Believing in American Craftsmanship

15 YEAR WARRANTY

Why Choose the SBS Series?



The SBS-24168C outdoor enclosure is a top choice for indoor and outdoor needs. Constructed with our Alumiflex® material, it is notably lighter than steel yet strong enough to easily support the heaviest equipment. The SBS series has an updated design, including a deeper compartment for more equipment space and improved door compression to keep the weather out. The SBS series can be used as an electrical panel, battery storage, communication cabinet, and more. Standard features include an aluminum removable back-plate, 1/4 turn-key locks, and rugged aluminum construction. Configurable for indoor or outdoor applications the available accessories add the ability to customize to your specific application with various mounting bracket types, including climate controls, venting options, and electrical/cable entry solutions. Every SBS enclosure includes DDB's unmatched warranty, the industry's best lead times, and competitive pricing. As expected, the DDB SBS series sets the mark as a design leader that is versatile and scalable to meet a wide array of situations. Contact our knowledgeable sales team for more information.

Application Types

Telecommunications
Wireless/Broadband
Fiber Optics
Small Cell/DAS
Public Safety
Utility
Military
Trailer-Based Communications
Wi-Fi
Video/Monitoring
Oil/Gas
Control Panels



Environmental & Safety Ratings:

- ✓ NEMA 4 (shown)
- ✓ 4X Available (not shown)

Features

15 Year Warranty
.125” Aluminum Construction
Stainless Steel External Hardware/Hinge
Aluminum Removable Back-Plate
Cream Powder Coat, Standard
¼ Turn-Key Locks
Flexible and Scalable
Quick Shipping

Weight and Dimensions

Approximate Exterior Enclosure Dimensions:
24”H x 19”W x 8”D
Shipping Dimensions:
24”D x 36”W x 12”H- Boxed
Approximate Shipping Weight:
30lbs.

2301 S. HWY 77 Pauls Valley, OK 73075
T: (405)-665-2876
sales@ddbunlimited.com www.ddbunlimited.com

DDB UNLIMITED®

An ISO 9001 Certified company

SBS Series

SBS-24168C

Made in America

Believing in American Craftsmanship

15 YEAR WARRANTY





Features

1. Powder-Coat Cream
2. 0.125" Aluminum Construction
3. ¼ Turn-Key Locks
4. Continuous Hinge
5. Removable Aluminum Backplate;
   Optional Plywood Backplate

Scan this code for Accessories

2301 S. HWY 77 Pauls Valley, OK 73075
T: (405)-665-2876
sales@ddbunlimited.com www.ddbunlimited.com

REVISIONS		
REV.	DESCRIPTION	DATE
A	SBS WEB DRAWING CREATED PER DR-02303	5/8/2020
F	DRAWING WAS NEVER UPDATED TO REV B,C,D OR E. UPDATED TO REV F TO MATCH THE PRODUCTION ASSEMBLY	5/9/2022

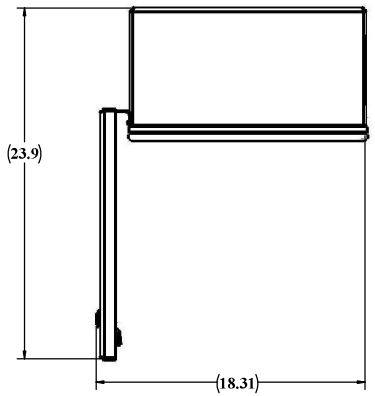

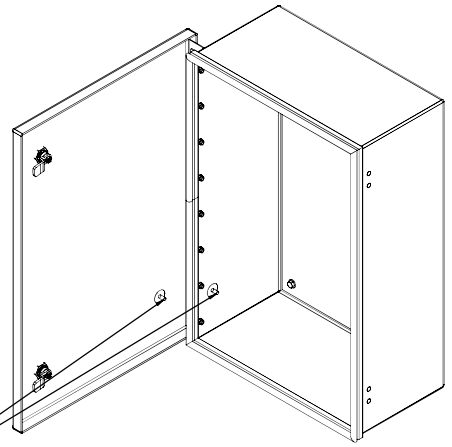

GROUNDING STUDS

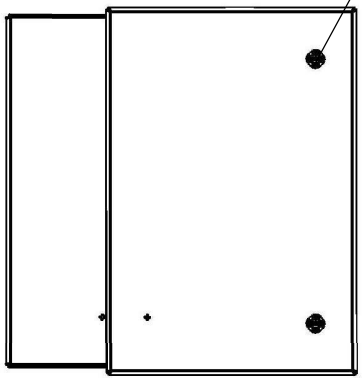

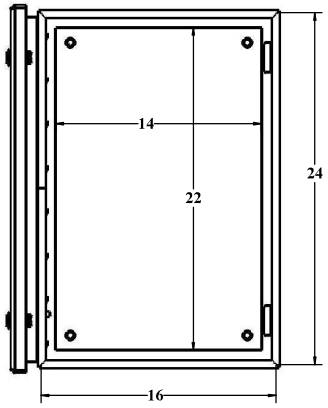

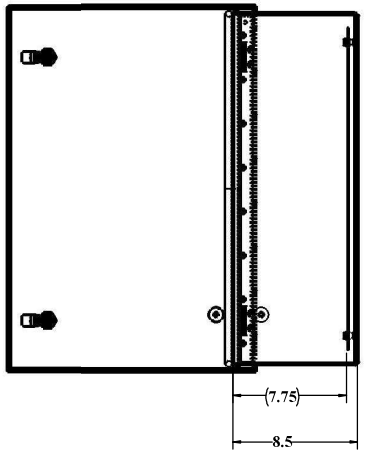

UNLESS OTHERWISE SPECIFIED:	DDB Unlimited Inc.			
DIMENSIONS ARE IN INCHES ANGULAR: ±1° FRACTIONAL/NO DECIMAL: ±1/16 TWO PLACE DECIMAL: ±.010 TWO PLACE DECIMAL: ±.0050 THREE PLACE DECIMAL: ±.0030 ALL HOLES ±.003Ø	SBS-24168 SBS-24168 (Non UL)SBS-24168			
	SIZE	Cage Code:	DWG. NO.:	REV
	D	3S5Y5	02303	F
MATERIAL: 5052-H32-0.125 ASTM B209-04	SCALE: 1:8	WEIGHT: 22.02 lbs.		SHEET 1 OF 2
PAINT: DIAMOND VOGEL, BEIGE GLOSS TEXTURE 874920				
DO NOT SCALE DRAWING				

DDB FORM 7.1-REV K 08/02/17

UNCLASSIFIED PUBLIC

File Location: (DDB)(EPDM Vault)
C:\DDB\DR Requests\Customers\DDB WEB DWG\SBS-Family\SBS-24168\

WEB DRAWING (NOT FOR FABRICATION)

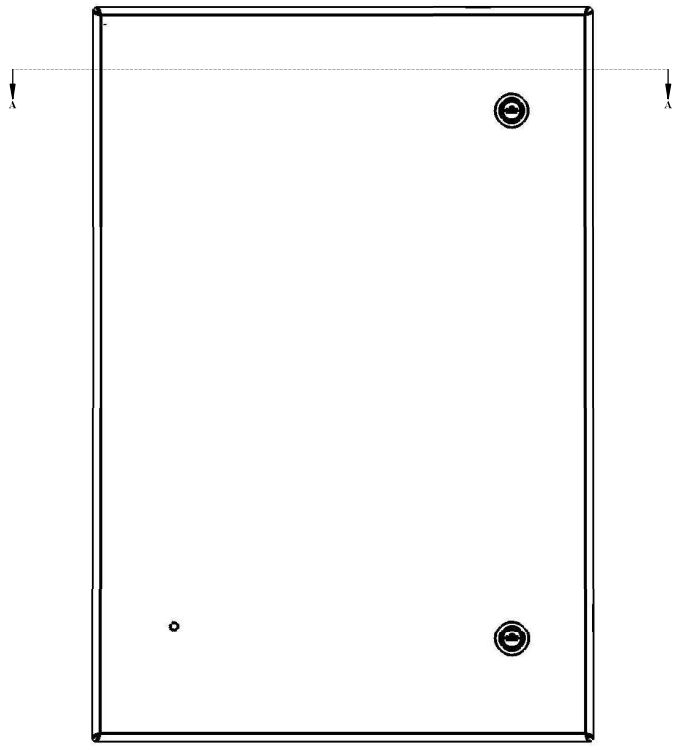

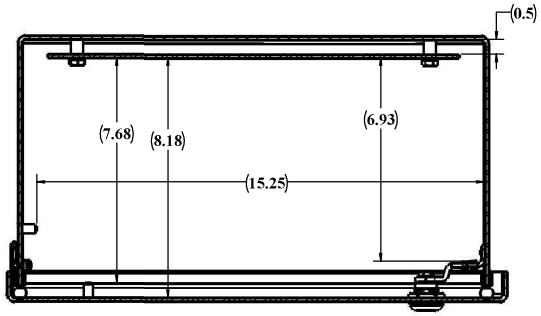

SECTION A-A
SCALE 1 : 2

DDB FORM 7.1-REV. K 08/03/17

WEB DRAWING (NOT FOR FABRICATION)

UNLESS OTHERWISE SPECIFIED: DIMENSIONS ARE IN INCHES. ANGULAR: FRACTIONAL: TWO PLACE DECIMAL: THREE PLACE DECIMAL: ALL EDGES ARE SHARP	*DDB Unlimited Inc.* SBS-24168 (closed) SBS-24168 (Non UL)		
	SIZE: D	Cage Code: 3S5Y5	DWG. NO.: 02303 — REV: F
MATERIAL: 5052-H32-0.125 ASTM B209-04	SCALE: 1:8	WEIGHT: 22.02 lbs.	SHEET 2 OF 2
PAINT: DIAMOND TOOL-DESK GLOSS TEXTURE E54650			
DO NOT SCALE DRAWING			

UNCLASSIFIED PUBLIC

File Location: (DDB)(EPDM Vault)
C:\DDB\DR Requests\Customers\DDB WEB DWG\SBS-Family\SBS-24168\

An ISO 9001 Certified company

SBS Series

SBS-262210C

Made in America

Believing in American Craftsmanship

15 YEAR WARRANTY

Why Choose the SBS Series?



The SBS-262210C outdoor enclosure is a top choice for indoor and outdoor needs. Constructed with our Alumiflex® material, it is notably lighter than steel yet strong enough to easily support the heaviest equipment. The SBS series has an updated design, including a deeper compartment for more equipment space and improved door compression to keep the weather out. The SBS series can be used as an electrical panel, battery storage, communication cabinet, and more. Standard features include an aluminum removable back-plate, 1/4 turn-key locks, and rugged aluminum construction. Configurable for indoor or outdoor applications the available accessories add the ability to customize to your specific application with various mounting bracket types, including climate controls, venting options, and electrical/cable entry solutions. Every SBS enclosure includes DDB's unmatched warranty, the industry's best lead times, and competitive pricing. As expected, the DDB SBS series sets the mark as a design leader that is versatile and scalable to meet a wide array of situations. Contact our knowledgeable sales team for more information.

Application Types

Telecommunications
Wireless/Broadband
Fiber Optics
Small Cell/DAS
Public Safety
Utility
Military
Trailer-Based Communications
Wi-Fi
Video/Monitoring
Oil/Gas
Control Panels



Environmental & Safety Ratings:

- ✓ NEMA 4 (shown)
- ✓ 4X Available (not shown)

Features

15 Year Warranty
.125” Aluminum Construction
Stainless Steel External Hardware/Hinge
Aluminum Removable Back-Plate
Cream Powder Coat, Standard
¼ Turn-Key Locks
Flexible and Scalable
Quick Shipping

Weight and Dimensions

Approximate Exterior Enclosure Dimensions:
26”H x 25”W x 10”D
Shipping Dimensions:
30"D x 30”W x 16”H- Boxed
Approximate Shipping Weight:
40 lbs.

2301 S. HWY 77 Pauls Valley, OK 73075
T: (405)-665-2876
sales@ddbunlimited.com www.ddbunlimited.com

DDB UNLIMITED®

An ISO 9001 Certified company

SBS Series

SBS-262210C

Made in America

Believing in American Craftsmanship

15 YEAR WARRANTY



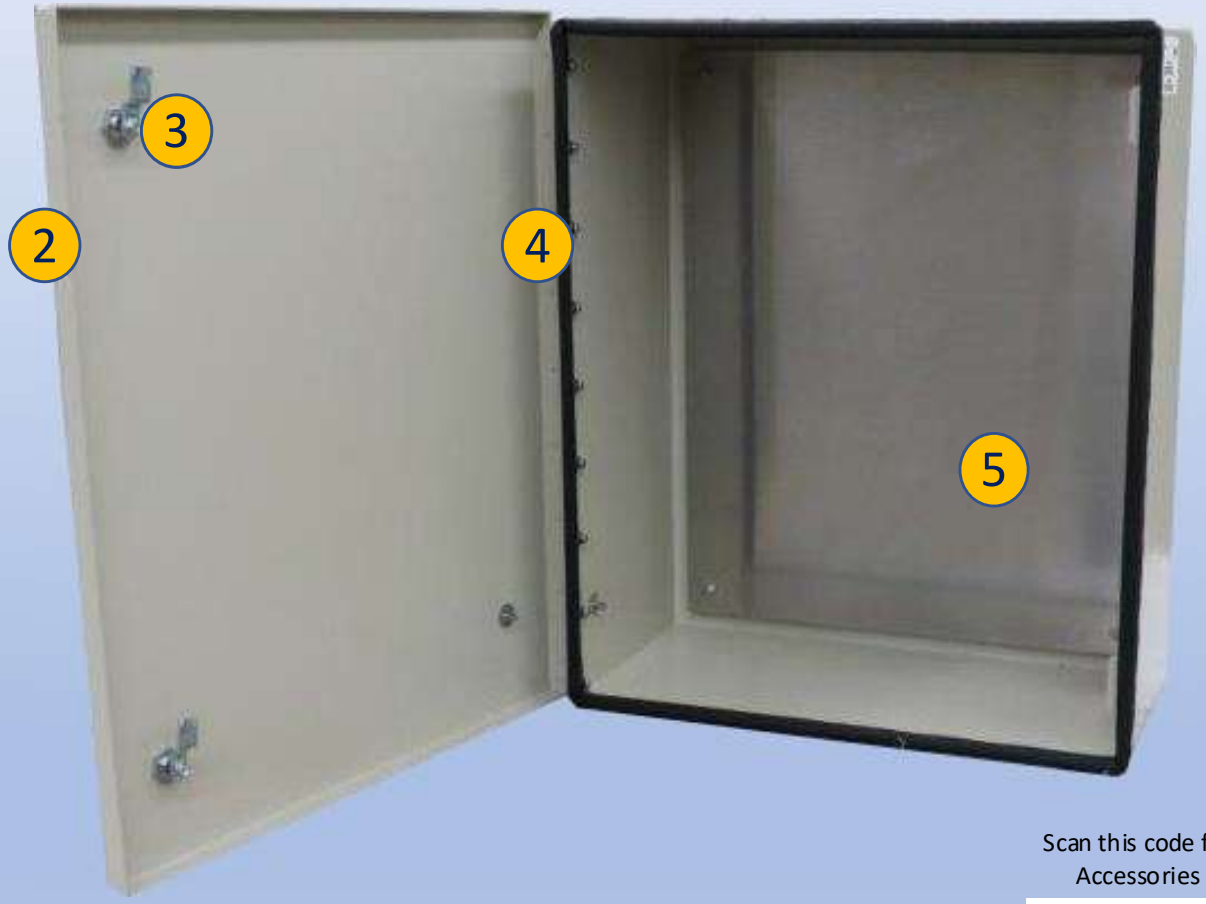

Features

1. Powder-Coat Cream
2. 0.125" Aluminum Construction
3. ¼ Turn-Key Locks
4. Continuous Hinge
5. Removable Aluminum Backplate; Optional Plywood Backplate

Scan this code for Accessories

2301 S. HWY 77 Pauls Valley, OK 73075
T: (405)-665-2876
sales@ddbunlimited.com www.ddbunlimited.com

REVISIONS		
REV.	DESCRIPTION	DATE
A	SBS WEB DRAWING CREATED PER DR-2305	5/8/2020
F	UPDATED TO REV F. DRAWINGS WERE NEVER UPDATED TO REV B, C, D, E NO DRAWING REQUESTS WERE EVER ISSUED.	5/9/2022

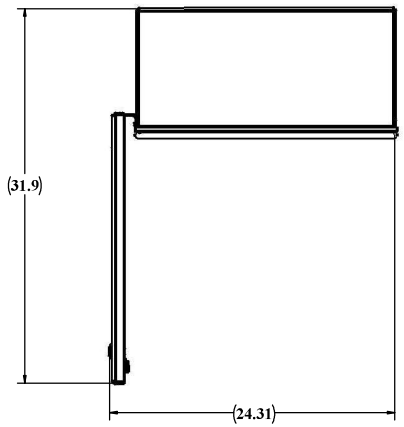

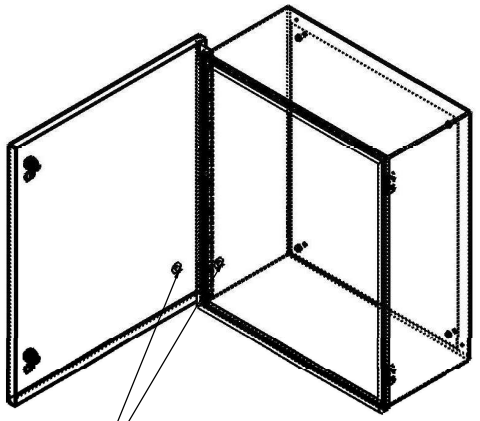

GROUNDING STUDS

QUARTER TURN LOCKING

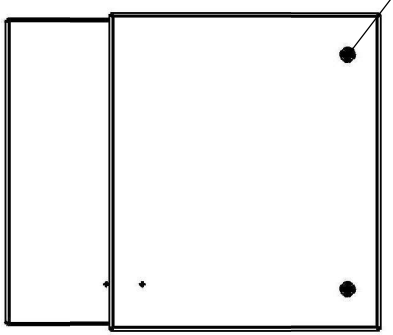

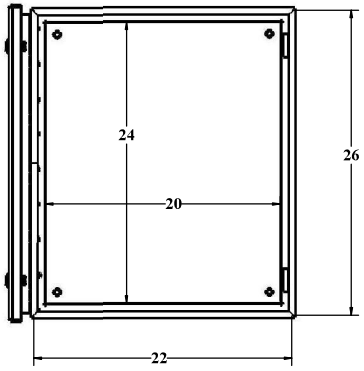

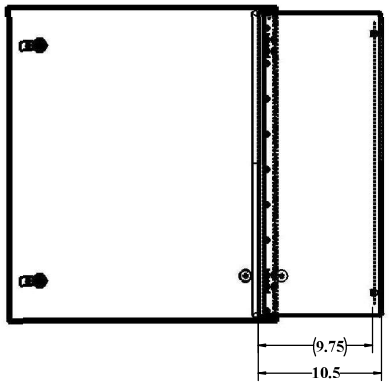

UNLESS OTHERWISE SPECIFIED:	DDB Unlimited Inc.			
DIMENSIONS ARE IN INCHES ANGULAR: ±1° FRACTIONAL NO DECIMAL: ±1/32 TWO PLACE DECIMAL: ±.010 THREE PLACE DECIMAL: ±.005	SBS-262210 SBS-262210 (Non UL)SBS-262210			
	SIZE	Cage Code:	DWG. NO.:	REV
	D	3B5Y5	02305	F
MATERIAL: 5052-H32-0.125 ASTM B209-04	SCALE: 1:8	WEIGHT: 33.65 lbs.	SHEET 1 OF 2	
PAINT: DIAMOND VOGEL, BEIGE GLOSS TEXTURE E14920				
DO NOT SCALE DRAWING				

TDDB FORM 7.1-REV.K 08/02/17

UNCLASSIFIED PUBLIC

File Location: (DDB)(EPDM Vault)
C:\DDB\DR Requests\Customers\DDB WEB DWG\SBS-Family\SBS-262210\

WEB DRAWING (NOT FOR FABRICATION)

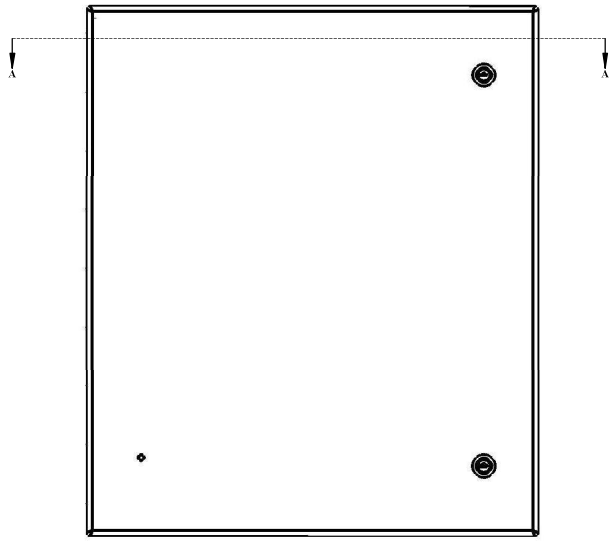

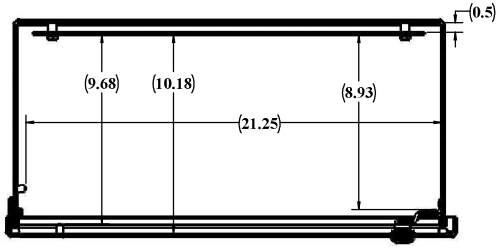

SECTION A-A
SCALE 1 : 3

WEB DRAWING (NOT FOR FABRICATION)

UNLESS OTHERWISE SPECIFIED:	***DDB Unlimited Inc.***			
DIMENSIONS ARE IN INCHES ANGULAR: FRACTIONAL/NO DECIMAL: TWO PLACE DECIMAL: THREE PLACE DECIMAL: ALL HOLES ⌀	SBS-262210 (closed) SBS-262210 (Non UL)SBS-262210 (closed)			
	SIZE	Cage Code:	DWG. NO.:	REV
MATERIAL: 5052-H32-0.125 ASTM B209-04	D	3S5Y5	02305	F
PAINT: DIAMOND VOGEL, BEIGE GLOSS TEXTURE 874920	SCALE: 1:8	WEIGHT: 33.66 lbs.		SHEET 2 OF 2
DO NOT SCALE DRAWING				

DDB FORM 7.1-REV K 08/02/17

UNCLASSIFIED PUBLIC

File Location: (DDB)(EPDM Vault)
C:\DDB\DR Requests\Customers\DDB WEB DWG\SBS-Family\SBS-262210\

An ISO 9001 Certified company

SBS Series

SBS-453010C

Made in America

Believing in American Craftsmanship

15 YEAR WARRANTY

Why Choose the SBS Series?



The SBS-453010C outdoor enclosure is a top choice for indoor and outdoor needs. Constructed with our Alumiflex® material, it is notably lighter than steel yet strong enough to easily support the heaviest equipment. The SBS series has an updated design, including a deeper compartment for more equipment space and improved door compression to keep the weather out. The SBS series can be used as an electrical panel, battery storage, communication cabinet, and more. Standard features include an aluminum removable back-plate, 1/4 turn-key locks, and rugged aluminum construction. Configurable for indoor or outdoor applications the available accessories add the ability to customize to your specific application with various mounting bracket types, including climate controls, venting options, and electrical/cable entry solutions. Every SBS enclosure includes DDB's unmatched warranty, the industry's best lead times, and competitive pricing. As expected, the DDB SBS series sets the mark as a design leader that is versatile and scalable to meet a wide array of situations. Contact our knowledgeable sales team for more information.

Application Types

Telecommunications
Wireless/Broadband
Fiber Optics
Small Cell/DAS
Public Safety
Utility
Military
Trailer-Based Communications
Wi-Fi
Video/Monitoring
Oil/Gas
Control Panels



Environmental & Safety Ratings:

- ✓ NEMA 4 (shown)
- ✓ 4X Available (not shown)

Features

15 Year Warranty
.125” Aluminum Construction
Stainless Steel External Hardware/Hinge
Aluminum Removable Back-Plate
Cream Powder Coat, Standard
¼ Turn-Key Locks
Flexible and Scalable
Quick Shipping

Weight and Dimensions

Approximate Exterior Enclosure Dimensions:
45”H x 33”W x 10”D
Shipping Dimensions:
52”D x 42”W x 20”H
Approximate Shipping Weight:
114 lbs.

2301 S. HWY 77 Pauls Valley, OK 73075
T: (405)-665-2876
sales@ddbunlimited.com www.ddbunlimited.com

DDB UNLIMITED®

An ISO 9001 Certified company

SBS Series

SBS-453010C

Made in America

Believing in American Craftsmanship

15 YEAR WARRANTY



Features

1. Powder-Coat Cream
2. 0.125" Aluminum Construction
3. ¼ Turn-Key Locks
4. Continuous Hinge
5. Removable Aluminum Backplate; Optional Plywood Backplate

Scan this code for Accessories

2301 S. HWY 77 Pauls Valley, OK 73075
T: (405)-665-2876
sales@ddbunlimited.com www.ddbunlimited.com

WEB DRAWING (NOT FOR FABRICATION)

REVISIONS		
REV.	DESCRIPTION	DATE
A	SBS WEB DRAWING CREATED PER DR-02309	5/8/2020
F	UPDATED TO REV. F. DRWAINGS WERE NEVER UPDATED TO REV B, C, D, & E. NO DRAWING REQUESTS WERE EVER ISSUED.	5/10/2022

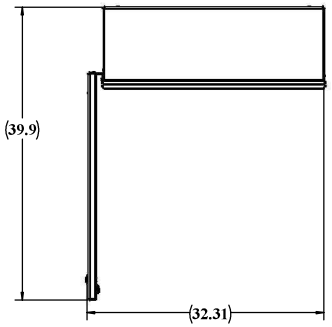

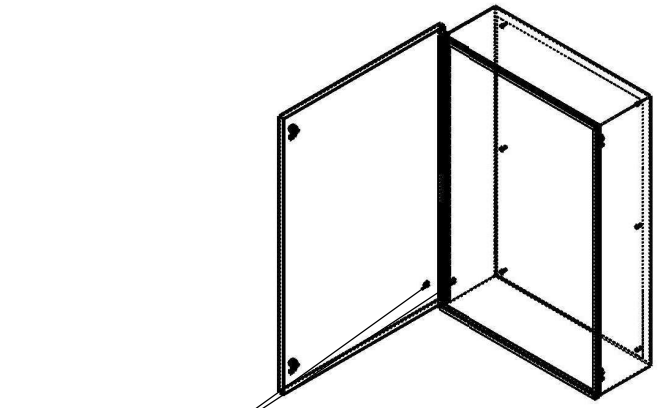

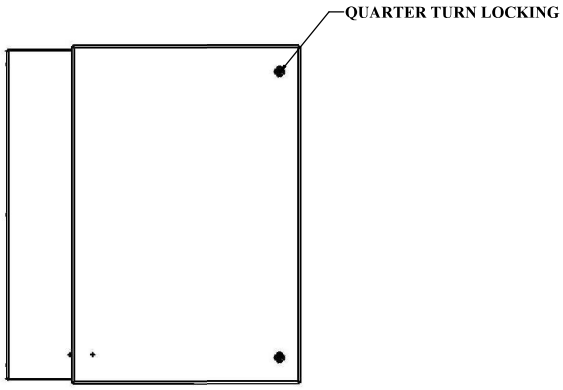

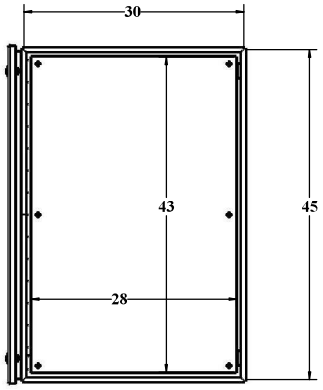

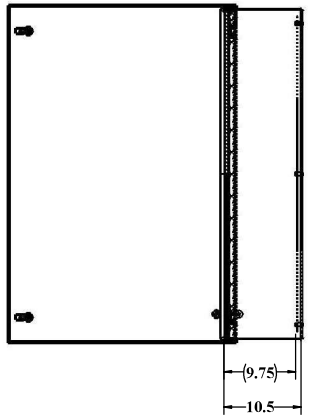

WEB DRAWING (NOT FOR FABRICATION)

UNLESS OTHERWISE SPECIFIED:	*DDB Unlimited Inc.*		
DIMENSIONS ARE IN INCHES ANGULAR: ±1° FRACTIONAL: NO DECIMAL: ±1/16 TWO PLACE DECIMAL: ±.010 THREE PLACE DECIMAL: ±.005 ALL EDGES ⌀125 RMS	SBS-453010 SBS-453010 (Non UL)		
	SIZE: D	Cage Code: 3S5Y5	DWG. NO.: 02309 REV: F
MATERIAL: 5052-H32 0.125" ASTM B209-04			
PAINT: DIAMOND VOGEL BLUE 61-555 TEXTURE 15-6050	SCALE: 1:12	WEIGHT: 69.16 lbs.	SHEET 1 OF 2
DO NOT SCALE DRAWING			

DDB-FORM-7.1-REV.K 08/03/17

UNCLASSIFIED PUBLIC

WEB DRAWING (NOT FOR FABRICATION)

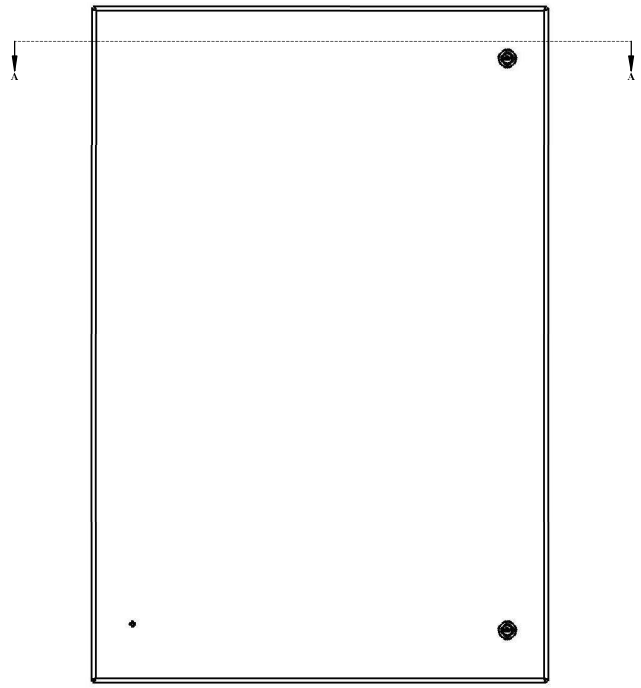

SECTION A-A
SCALE 1 : 4

WEB DRAWING (NOT FOR FABRICATION)

UNLESS OTHERWISE SPECIFIED:	*DDB Unlimited Inc.*		
DIMENSIONS ARE IN INCHES ANGULAR: ±1° FRACTIONAL: ±1/64 TWO PLACE DECIMAL: ±.010 THREE PLACE DECIMAL: ±.005 ALL EDGES ▼ 125	SBS-453010 (closed)		
	SIZE: D	Cage Code: 385Y5	DWG. NO.: 02309 — REV: F
MATERIAL: 5052-H32-0.125 ASTM B209-04	SCALE: 1:12	WEIGHT: 69.19 lbs.	SHEET 2 OF 2
PAINT: SHADOW COOL BEIGE GLOSS TEXTURE LS4028	DO NOT SCALE DRAWING		

UNCLASSIFIED PUBLIC

File Location: (DDB)(EPDM Vault)
C:\DDB\DR Requests\Customers\DDB WEB DWG\SBS-Family\SBS-453010\

DDB-FORM 7.1-REV.K 08/03/17

DDB UNLIMITED®

An ISO 9001 Certified company

SVP Series

SVP-14127

Made in America

Believing in American Craftsmanship

15 YEAR WARRANTY

Why Choose the SVP Series?

The SVP series, outdoor enclosure, is the ultimate choice for your indoor/outdoor requirements. Being made of our own rugged Alumiflex®, you'll find it noticeably lighter than steel, yet strong enough to support even the heaviest equipment. When choosing the SVP series, you are selecting the highest value in American construction. It is ideal for both indoor and outdoor applications. Due to the flexible platform, the SVP can be utilized as an electrical panel, battery storage, or communication cabinet as well as other numerous applications. The SVP series includes standard features you have come to expect, including a standard back plate, key locks, and various mounting bracket types. Additional optional accessories that can be added to enhance functionality include climate controls, venting options, and electrical/cable entry solutions. All of this comes together to create an enclosure able to meet all of the unique needs your customers have been seeking. DDB offers a state-of-the-art design, a competitive price, benchmark lead times and a guaranteed delivery, all backed up with an industry leading 15-year warranty on every enclosure. Put DDB's substantial stock to work for you today. Contact our professional staff to assist you with your made-to-order solution.



Features

0.125" Aluminum Construction

Stainless Steel External Hardware/Hinge

Aluminum Removable Back-Plate

Heavy Duty Out-Door Construction

Custom Colors Available

Cream Powder-Coat in Stock

Flexible and Scalable

15 Year Warranty

Quick Shipping

Application Types

Telecommunications
Wireless/Broadband
Fiber Optics
Back Haul
Small Cell/DAS
Public Safety
Utility
Military
Trailer-Based Communications
Wi-Fi
Video/Monitoring
Oil/Gas
Control Panels



Industry Standards:

NEMA 3R as shown

Weight and Dimensions

Approximate Exterior Enclosure Dimensions:

15"H x 13"W x 8"D

Shipping Dimensions:

26" x 27" x 12" - Boxed

Approximate Shipping Weight:

20 lbs.

2301 S. HWY 77 Pauls Valley, OK 73075
T: (800) 753-8459 – F: (877) 220-7236
sales@ddbunlimited.com www.ddbunlimited.com

DDB UNLIMITED®

An ISO 9001 Certified company

SVP Series

SVP-14127

Made in America

Believing in American Craftsmanship

15 YEAR WARRANTY





Features

1. ¼ Turn Key Locks
2. Removable Aluminum Backplate
3. Air & Fan Vents
4. Powder-Coat Cream

2301 S. HWY 77 Pauls Valley, OK 73075
T: (800) 753-8459 – F: (877) 220-7236
sales@ddbunlimited.com www.ddbunlimited.com

REVISIONS		
REV.	DESCRIPTION	DATE
A	WEBSITE DRAWING	12/8/2014
B	CREATED WEB DWG PER DR-01391	5/10/16

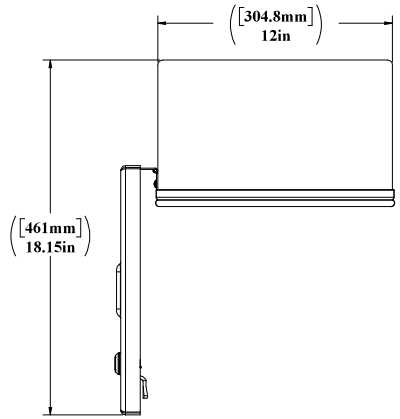

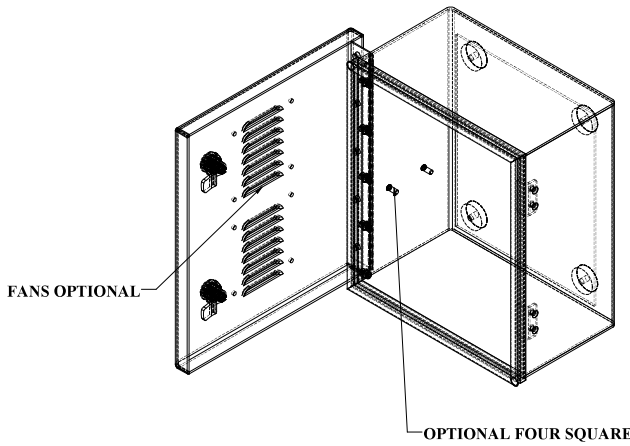

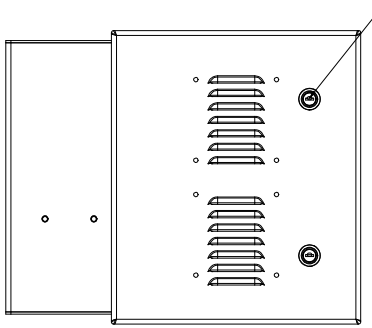

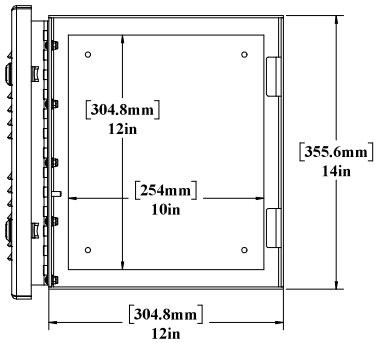

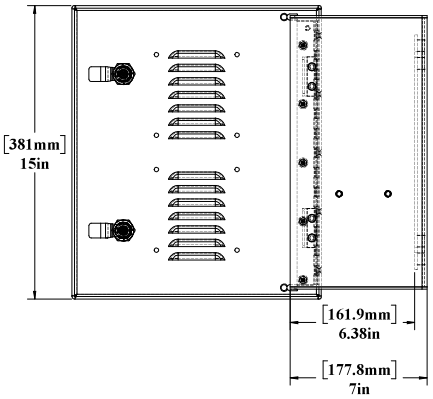



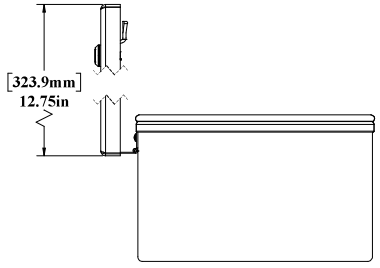

PROPRIETARY AND CONFIDENTIAL
THE INFORMATION CONTAINED IN THIS DRAWING IS THE SOLE PROPERTY OF DDB Unlimited, INC. ANY
REPRODUCTION IN PART OR AS A WHOLE WITHOUT THE WRITTEN PERMISSION OF DDB Unlimited, INC. IS PROHIBITED.

UNLESS OTHERWISE SPECIFIED:
DIMENSIONS ARE IN INCHES
ANGULAR: ±1°
FRACTIONAL ± 1/64
XX DECIMAL ± .01 [0.25]
XXX DECIMAL ± .005 [0.13]
THREAD CLASS: EXTERNAL 2A INTERNAL 2B
ALL HOLES ±.003 [0.08] TRUE POSITION
MATERIAL: SEE BOM ±0.5 DEGREES
BEND RADIUS: .030 [0.76] UNLESS OTHERWISE SPECIFIED
MATERIAL: 5052-H32
PAINT: SEE P.O.
DO NOT SCALE DRAWING

DDB Unlimited Inc.
SVP-14127
SVP-14127

SIZE	Cage Code:	DWG. NO.:	REV
D	3S5Y5	01090	B
SCALE: 1:4	WEIGHT: 11 lbs.	SHEET 1 OF 1	

DDB FORM: 7.1-7 REV.J 12/08/15

File Location: (DDB)(EPDM Vault:)
C:\DDB\Drawing Requests\Customers\DDB WEB DWG\SVP\SVP-14127\

DDB UNLIMITED®

An ISO 9001 Certified company

SVP Series

SVP-453010

Made in America

Believing in American Craftsmanship

15 YEAR WARRANTY

Why Choose the SVP Series?

The SVP series, outdoor enclosure, is the ultimate choice for your indoor/outdoor requirements. Being made of our own rugged Alumiflex®, you'll find it noticeably lighter than steel, yet strong enough to support even the heaviest equipment. When choosing the SVP series, you are selecting the highest value in American construction. It is ideal for both indoor and outdoor applications. Due to the flexible platform, the SVP can be utilized as an electrical panel, battery storage, or communication cabinet as well as other numerous applications. The SVP series includes standard features you have come to expect, including a standard back plate, pad locking hasps, and various mounting bracket types. Additional optional accessories that can be added to enhance functionality include climate controls, venting options, and electrical/cable entry solutions. All of this comes together to create an enclosure able to meet all of the unique needs your customers have been seeking. DDB offers a state-of-the-art design, a competitive price, benchmark lead times and a guaranteed delivery, all backed up with an industry leading 15-year warranty on every enclosure. Put DDB's substantial stock to work for you today. Contact our professional staff to assist you with your made-to-order solution.



Features

0.125" Aluminum Construction

Stainless Steel External Hardware/Hinge

Heavy Duty Out-Door Construction

Aluminum Removable Back-Plate

Cream Powder-Coat in Stock

Custom Colors Available

Flexible and Scalable

15 Year Warranty

Quick Shipping

Application Types

Telecommunications
Wireless/Broadband
Fiber Optics
Back Haul
Small Cell/DAS
Public Safety
Utility
Military
Trailer-Based Communications
Wi-Fi
Video/Monitoring
Oil/Gas
Control Panels



Industry Standards:

NEMA 3R as shown

Weight and Dimensions

Approximate Exterior Enclosure Dimensions:

46"H x 31"W x 11"D

Shipping Dimensions:

58"D x 42W Palletized

Approximate Shipping Weight:

130 lbs.

2301 S. HWY 77 Pauls Valley, OK 73075
T: (800) 753-8459 – F: (877) 220-7236
sales@ddbunlimited.com www.ddbunlimited.com

DDB UNLIMITED®

An ISO 9001 Certified company

SVP Series

SVP-453010

Made in America

Believing in American Craftsmanship

15 YEAR WARRANTY





Features

1. Pad Locking Hasps
2. Removable Backplate
3. Reusable Filter
4. Powder-Coat Cream

2301 S. HWY 77 Pauls Valley, OK 73075
T: (800) 753-8459 – F: (877) 220-7236
sales@ddbunlimited.com www.ddbunlimited.com

WEB DRAWING (NOT FOR FABRICATION)

REVISIONS		
REV.	DESCRIPTION	DATE
A	Initial Release per DR-00988	5/28/2014
B	CREATED NEW WEB DWG PER DR-01393	5/10/16

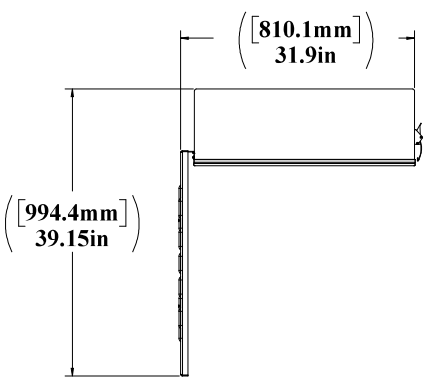

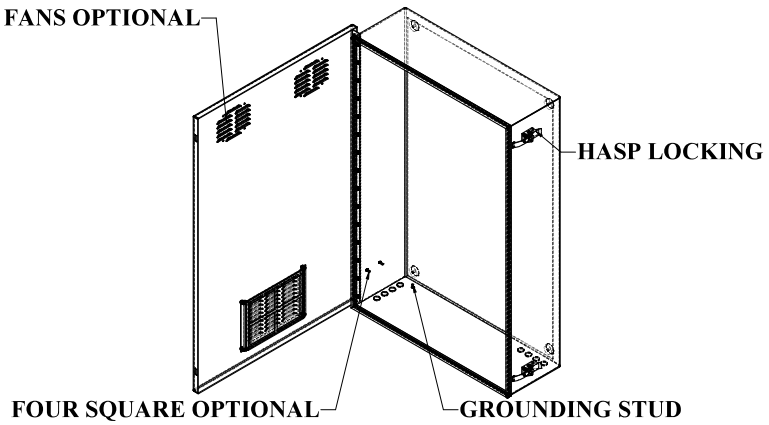

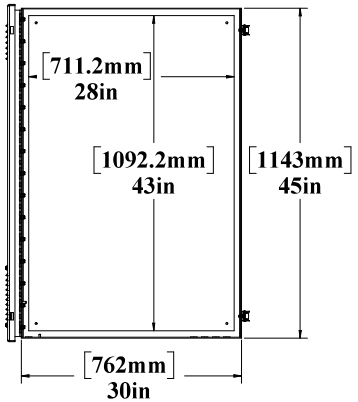

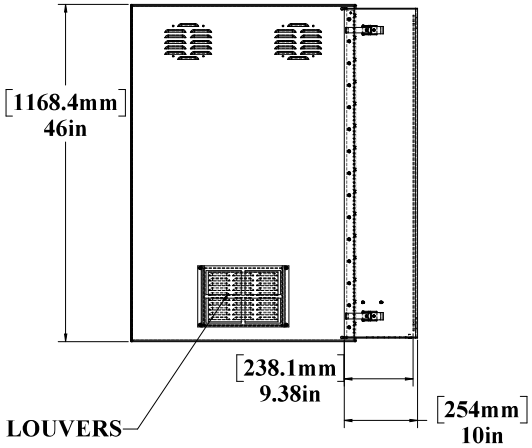

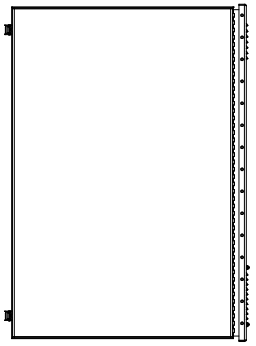

MOUNTING OPTIONS AVAILABLE SEE DWG# 00999

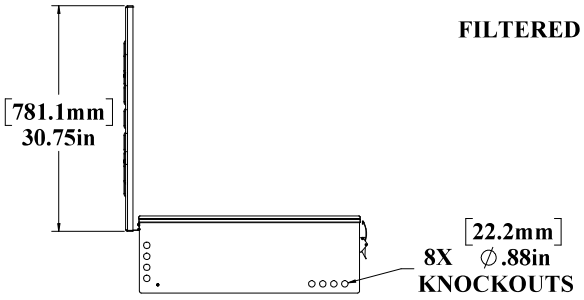

NOTES: UNLESS OTHERWISE SPECIFIED

1. DIMENSIONS AND TOLERANCES ARE IN ACCORDANCE WITH ASME Y14.5M
2. DIMENSIONS ARE IN INCHES, UNLESS OTHERWISE SPECIFIED.
3. THIS IS A SUPPLEMENTAL DRAWING AND MAY NOT BE FULLY DIMENSIONED. THE NOTES, TOLERANCES, AND SPECIAL INSTRUCTIONS ARE TO BE USED ALONG WITH THE LATEST REVISION OF THE SOLID DATABASE. THE PART OR ASSEMBLY IS TO BE CONTROLLED PER THE ELECTRONIC FILE.
4. ALL PEM STUDS SHALL BE FHS FOR STAINLESS ENCLOSURES AND FHA FOR ALUMINUM.
5. ALL EXTERIOR WASHERS SHALL BE SEALING WASHERS.
6. THE FOLLOWING WEATHER STRIPPING SHALL BE USED FOR THE FOLLOWING APPLICATIONS:
   DOOR LIP - TRIMLOCK X108HBX180C
   FAN PLATES - STICKER-TITE 1/8x3/8
   ACS - STICKER-TITE 1/4x3/4
7. CUSTOM ENCLOSURES SHALL HAVE SECURITY TORX FOR ALL EXTERIOR HARDWARE.
8. SYMBOL Ⓢ DENOTES CRITICAL DIMENSIONS AND MUST BE INSPECTED.
9. REMOVE ALL BURRS AND SHARP EDGES 0.025" MAX RADIUS OR CHAMFER.
10. DO NOT DEBURR PRESS FIT HOLES.
11. DIMENSIONS SHALL APPLY AFTER ALODINE, PAINT, FINISH, OR COAT IS APPLIED
12. INSTALL PRESS FIT STANDOFFS, STUDS, AND NUTS IN ACCORDANCE WITH THE MANUFACTURER'S SPECIFICATIONS.
13. ALL OPEN HOLES SHALL BE POPULATED WITH APPLICABLE HARDWARE.
14. IDENTIFY PART WITH PART NUMBER, REVISION LETTER AND SERIAL NUMBER.
15. FINISHED PART TO BE FREE OF OILS, LUBRICANTS, AND OTHER CONTAMINANTS.
16. NO NYLON LOCK NUTS TO BE USED ON ANY PEM STUDS, UNLESS OTHERWISE SPECIFIED.
17. ALL PEM STUDS WILL BE SECURED WITH EXTERNAL TOOTH WASHER AND STANDARD NUTS.
18. TOLERANCES, UNLESS OTHERWISE SPECIFIED:
    a. HOLE SIZE +/- 0.003"
    b. HOLE TO HOLE +/- 0.005"
    c. HOLE TO EDGE +/- 0.010"
    e. HOLE TO FOLD +/- 0.015"
    f. FOLD TO FOLD +/- 0.020"

DDB FORM: 7.1-2 REV.E 04/25/13

WEB DRAWING (NOT FOR FABRICATION)

ISO 9001 REGISTERED COMPANY
Certificate NO. 7252

UNLESS OTHERWISE SPECIFIED:
DIMENSIONS ARE IN INCHES
ANGULAR: MACH ± BEND ± 1°
TWO PLACE DECIMAL ± 0.010
THREE PLACE DECIMAL ± 0.005
ALL EDGES BREAK
MATERIAL THICKNESS ± 0.13"
MATERIAL: Varies
PAINT: Varies
DO NOT SCALE DRAWING

	NAME	DATE
Model by:	DDB	6/3/14
Drawn by:	areese	05/16/16
Sales Rep:	Jon Campbell	
Q.A. Appr.:	ddickins	05/17/16
Prod. Mgr.:	ClarkK	05/17/16
Control Number:		

DDB Unlimited Inc.
SVP-XXXXXX
DWG, WEB, SVP, 45"H x 30"W x 10"D

SIZE	Cage Code:	DWG. NO.:	REV
D	3S5Y5	00988	B

SCALE: 1:4 WEIGHT: 73 lbs. SHEET 1 OF 1

File Location: (DDB)(EPDM Vault)
C:\DDB\Drawing Requests\Customers\DDB WEB DWGS\SVP\DR-00988 (SVP-453010)\

PROPRIETARY AND CONFIDENTIAL
THE INFORMATION CONTAINED IN THIS DRAWING IS THE SOLE PROPERTY OF DDB Unlimited, INC. ANY REPRODUCTION IN PART OR AS A WHOLE WITHOUT THE WRITTEN PERMISSION OF DDB Unlimited, INC. IS PROHIBITED.

DDB UNLIMITED®

An ISO 9001 Certified company

ST Series

ST-30D

Made in America

Believing in American Craftsmanship

15 YEAR WARRANTY

Why Choose the ST Series?



The ST series of enclosures are the ultimate choice for your indoor racking requirements. Being made of our own rugged Alumiflex®, you'll find it noticeably lighter than steel, yet strong enough to rack even the heaviest equipment. When choosing the ST series, you have handpicked the highest value in American construction. The ST-30D includes the standard features you have come to expect with DDB, incorporating the versatile strut system for adjustable racking, the security of a lockable slam-latch system and easy clean filters. For those who need more than just our standard enclosure, DDB can also make a truly customized solution with our many available options including fan kits, heater strips, mounting trays, & cable management. All of this comes together to create an enclosure able to meet all of the unique needs our customers have been seeking. DDB offers a state-of-the-art design, a competitive price, benchmark lead times and a guaranteed delivery, all backed up with an industry leading 15-year warranty on every enclosure. Put DDB's substantial stock to work for you today. Contact our professional staff to assist you with your made-to-order solution.

Application Types

Telecommunications
Wireless/Broadband
Fiber Optics
Data Centers
Server rooms
Small Cell/DAS
Trailer-Base Communications
Public Safety

Utility
Military
Base Station
Backhaul
Wi-Fi
LTEE/4G/5G



Environmental & Safety Ratings:

✓ NEMA 2

Features

15 Year Warranty
0.100” Aluminum Construction
Stainless Steel External Hardware/Hinge
Lockable Slam-Latch
Heavy Duty Indoor Construction
Front and Rear Access
Cream Powder-Coat, Standard
Flexible and Scalable
Quick Shipping

Weight and Dimensions

Approximate Exterior Enclosure Dimensions:
30”H x 23”W x 17”D
Shipping Dimensions:
42” D x 32”W Palletized
Approximate Shipping Weight:
90 lbs.

2301 S. HWY 77 Pauls Valley, OK 73075
T: (405)-665-2876
sales@ddbunlimited.com www.ddbunlimited.com

DDB UNLIMITED®
An ISO 9001 Certified company

ST Series

ST-30D

Made in America
Believing in American Craftsmanship
WARRANTY 15 YEAR WARRANTY



Features

1. 0.100” Aluminum Construction
2. Lockable Slam-Latch
3. Reusable Foam Filters
4. Stainless Stell Door Hinge
5. 19” Adjustable Racking Rails
6. Rear Door Access
7. Powder Coat Cream

2301 S. HWY 77 Pauls Valley, OK 73075
T: (405)-665-2876
sales@ddbunlimited.com www.ddbunlimited.com

Scan this code for Climate Control

Scan this code for Accessories

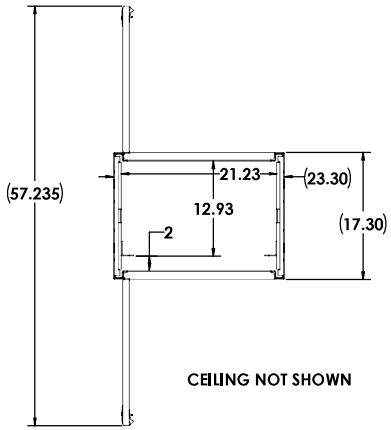

CEILING NOT SHOWN

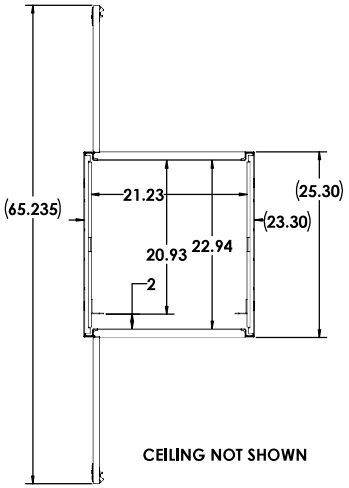

CEILING NOT SHOWN

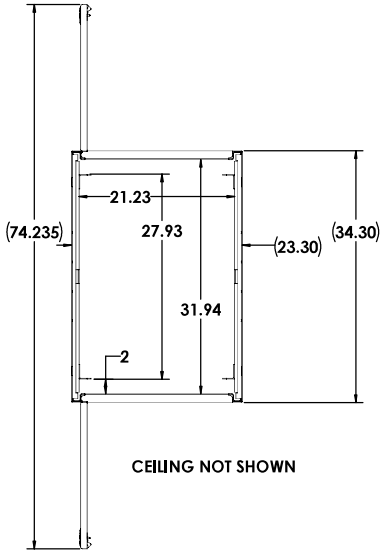

CEILING NOT SHOWN

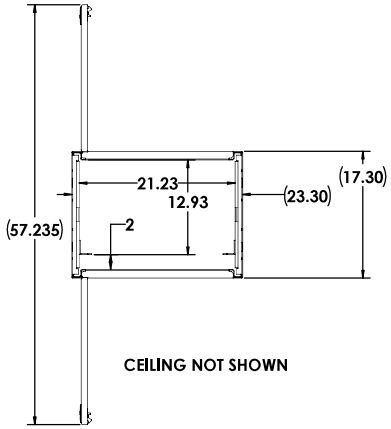

CEILING NOT SHOWN

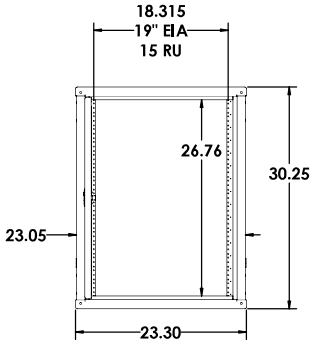

ST-30D

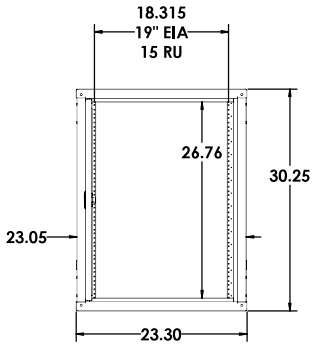

ST-30DX

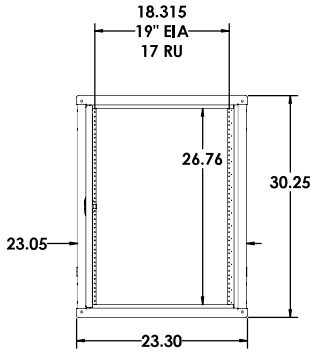

ST-30DD

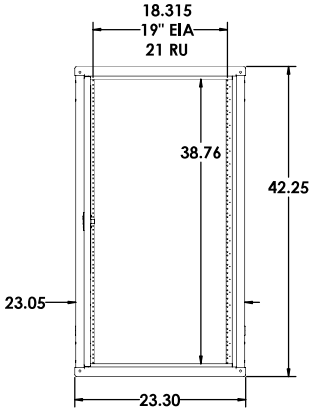

IOD-42D

30D DIAMOND VOGEL, BEIGE GLOSS TEXTURE ET-8320
30DX DIAMOND VOGEL, BEIGE GLOSS TEXTURE ET-8320
30DD DIAMOND VOGEL, BEIGE GLOSS TEXTURE ET-8320
42D DIAMOND VOGEL, BEIGE GLOSS TEXTURE ET-8320
42DX DIAMOND VOGEL, BEIGE GLOSS TEXTURE ET-8320
42DD DIAMOND VOGEL, BEIGE GLOSS TEXTURE ET-8320
62DXB DIAMOND VOGEL, BLACK RIVER TEXTURE ET-9384

UNLESS OTHERWISE SPECIFIED:
DIMENSIONS ARE IN INCHES
ANGULAR: ±1°
FRACTIONAL ±1/32
TWO PLACE DECIMAL ±0.030
THREE PLACE DECIMAL ±0.010
ALL HOLES Ø.005 Ⓜ B Ⓜ
MATERIAL: Material <not specified>
FINISH:
DO NOT SCALE DRAWING

DDB Unlimited Inc.
30D

SIZE	Cage Code:	DWG. NO.:	REV
D	3S5Y5	00070	E
SCALE: 1:8	WEIGHT: 49 lbs.	SHEET 3 OF 4	

09/19/24

UNCLASSIFIED PUBLIC

File Location: (DDB)(EPDM Vault) C:\DDB\DR Requests\Customers\DDB WEB DWG\ST-XXXX\

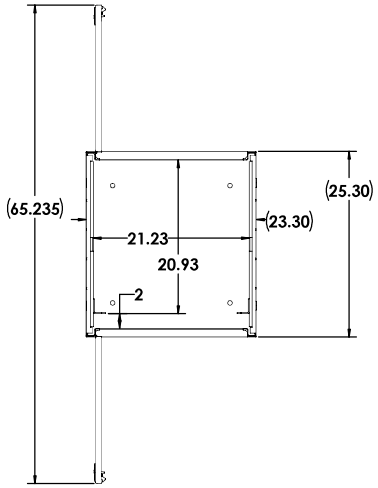

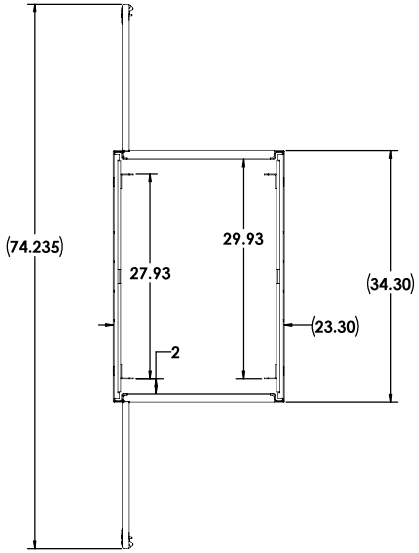

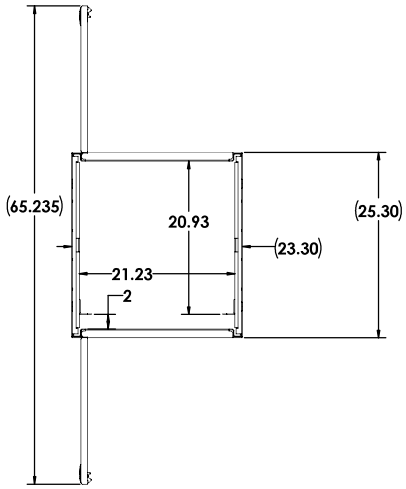

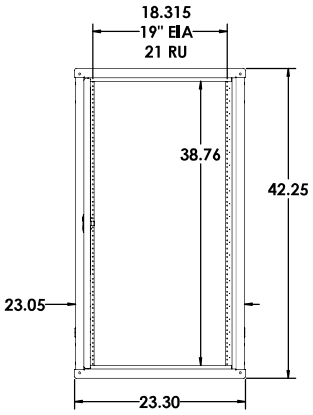

ST-42DX

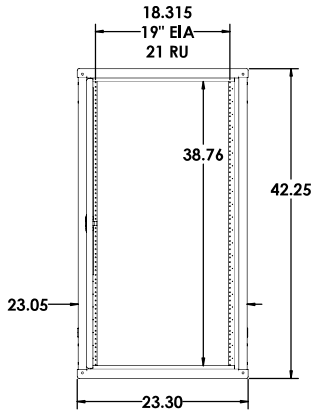

ST-42DD

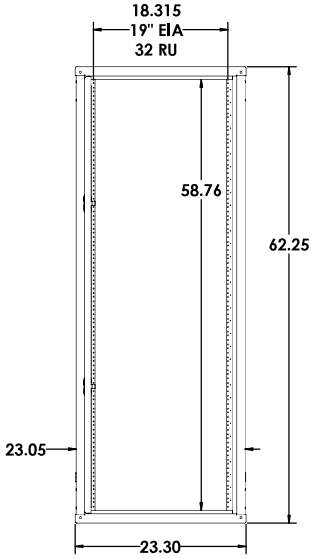

ST-62DXB

UNLESS OTHERWISE SPECIFIED:	DDB Unlimited Inc.			
DIMENSIONS ARE IN INCHES	42DD			
ANGULAR: ±1°	SIZE	Cage Code:	DWG. NO.:	REV
FRACTIONAL ±1/64 DECIMAL: ±0.1250	D	385Y5	00070	E
TWO PLACE DECIMAL: ±0.0500	SCALE: 1:8	WEIGHT: 92 lbs.		SHEET 4 OF 4
THREE PLACE DECIMAL: ±0.0150				
AS PER ASME Y14.5M-1994				
MATERIAL: SS304+#2B+CTD 1100 ASTM B209Mgr16				
PAINT: TEXMARK POWDER, WHITE GLOSS TEXTURE TM5329				
DO NOT SCALE DRAWING				

09/19/24

PROPRIETARY AND CONFIDENTIAL
THE INFORMATION CONTAINED IN THIS DRAWING IS THE SOLE PROPERTY OF DDB Unlimited, INC. ANY REPRODUCTION IN PART OR AS A WHOLE WITHOUT THE WRITTEN PERMISSION OF DDB Unlimited, INC. IS PROHIBITED.

File Location: (DDB)(EPDM Vault) C:\DDB\DR Requests\Customers\DDB WEB DWG\ST-XXXX\

DDB UNLIMITED®

An ISO 9001 Certified company

ST Series

ST-30DX

Made in America

Believing in American Craftsmanship

15 YEAR WARRANTY

Why Choose the ST Series?



The ST series of enclosures are the ultimate choice for your indoor racking requirements. Being made of our own rugged Alumiflex®, you'll find it noticeably lighter than steel, yet strong enough to rack even the heaviest equipment. When choosing the ST series, you have handpicked the highest value in American construction. The ST-30DX includes the standard features you have come to expect with DDB, incorporating the versatile strut system for adjustable racking, the security of a lockable slam-latch system and easy clean filters. For those who need more than just our standard enclosure, DDB can also make a truly customized solution with our many available options including fan kits, heater strips, mounting trays, & cable management. All of this comes together to create an enclosure able to meet all of the unique needs our customers have been seeking. DDB offers a state-of-the-art design, a competitive price, benchmark lead times and a guaranteed delivery, all backed up with an industry leading 15-year warranty on every enclosure. Put DDB's substantial stock to work for you today. Contact our professional staff to assist you with your made-to-order solution.

Features

15 Year Warranty

0.100” Aluminum Construction

Stainless Steel External Hardware/Hinges

Lockable Slam-Latch

Heavy Duty Indoor Construction

Front and Rear Access

Cream Powder-Coat, Standard

Flexible and Scalable

Quick Shipping

Application Types

Telecommunications

Wireless/Broadband

Fiber Optics

Data Centers

Server rooms

Small Cell/DAS

Trailer-Base Communications

Public Safety

Utility

Military

Base Station

Backhaul

Wi-Fi

LTEE/4G/5G



Environmental & Safety Ratings:

✓ NEMA 2

Weight and Dimensions

Approximate Exterior Enclosure Dimension

30”H x 23”W x 25”D

Shipping Dimensions:

42”D x 32”W Palletized

Approximate Shipping Weight:

93 lbs.

2301 S. HWY 77 Pauls Valley, OK 73075

T: (405)-665-2876

sales@ddbunlimited.com www.ddbunlimited.com

DDB UNLIMITED®
An ISO 9001 Certified company

ST Series

ST-30DX

Made in America
Believing in American Craftsmanship

15 YEAR WARRANTY

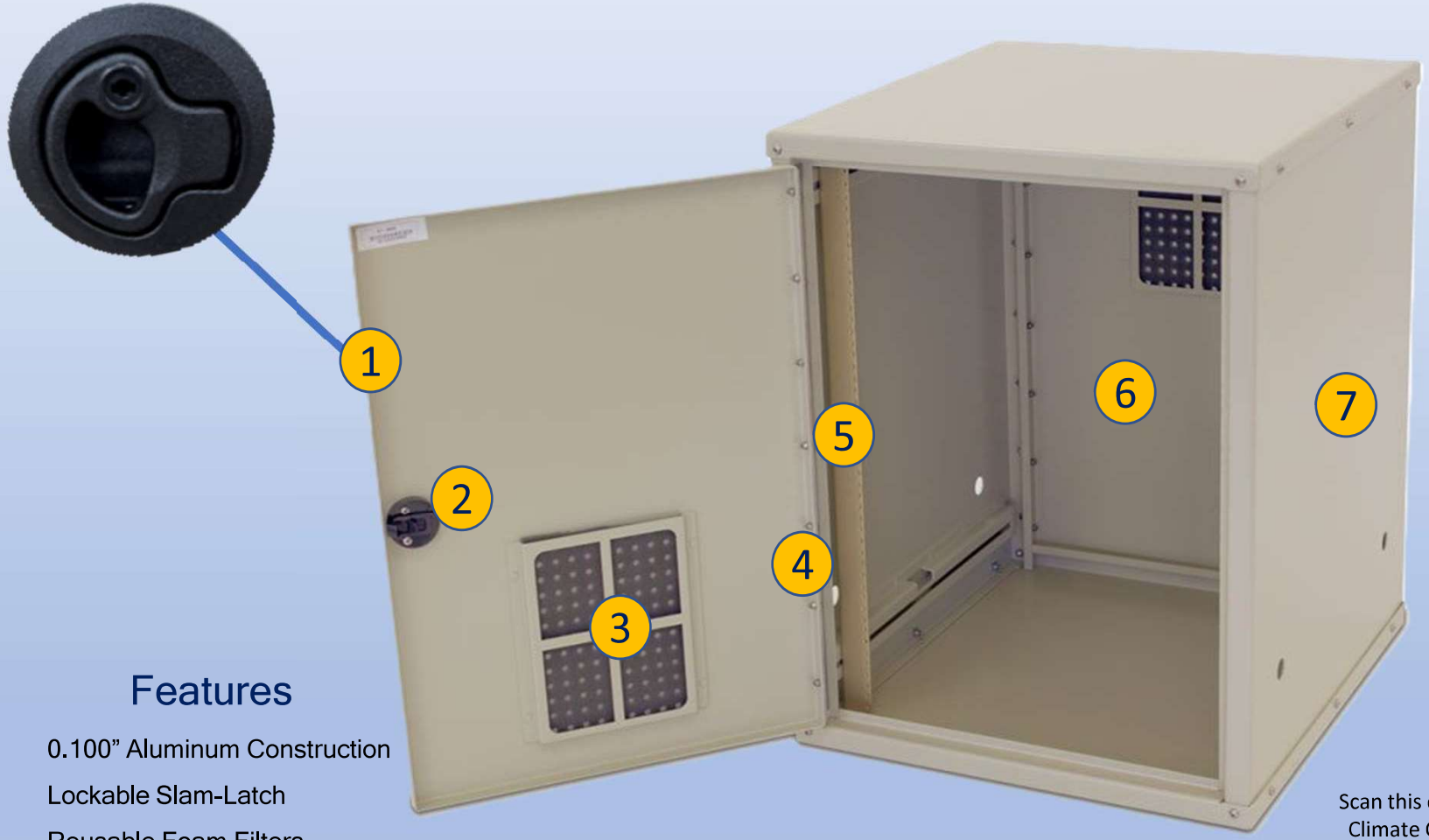

Features

1. 0.100” Aluminum Construction
2. Lockable Slam-Latch
3. Reusable Foam Filters
4. Stainless Stell Door Hinge
5. 19” Adjustable Racking Rails
6. Rear Door Access
7. Powder Coat Cream

2301 S. HWY 77 Pauls Valley, OK 73075
T: (405)-665-2876
sales@ddbunlimited.com www.ddbunlimited.com

Scan this code for Climate Control

Scan this code for Accessories

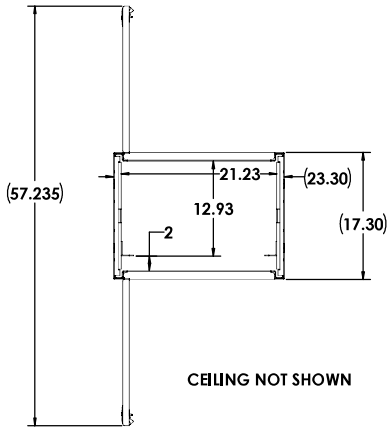

CEILING NOT SHOWN

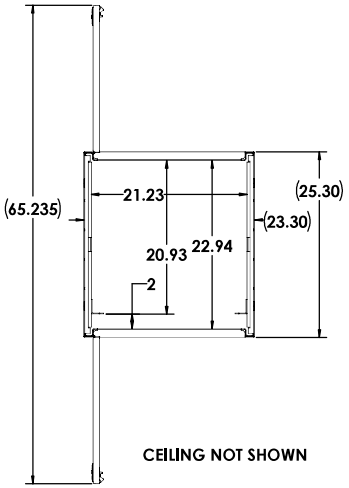

CEILING NOT SHOWN

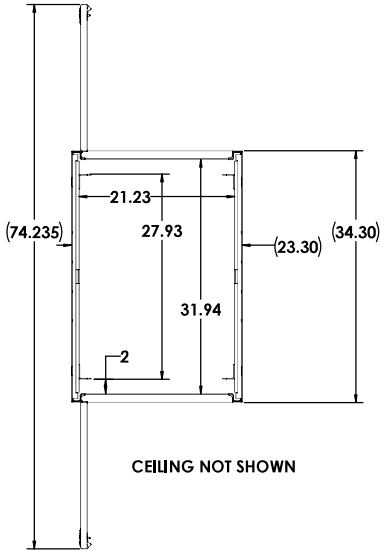

CEILING NOT SHOWN

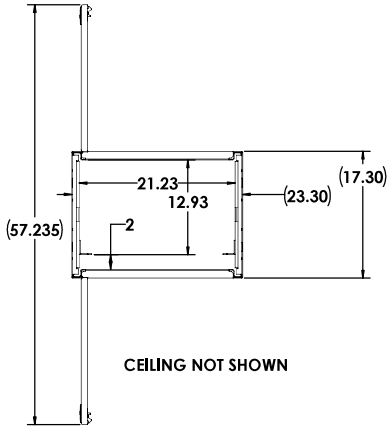

CEILING NOT SHOWN

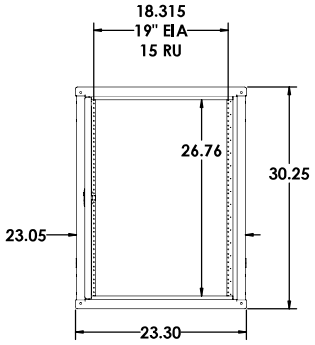

ST-30D

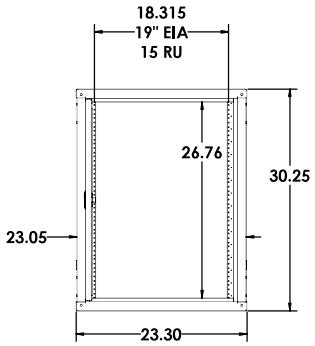

ST-30DX

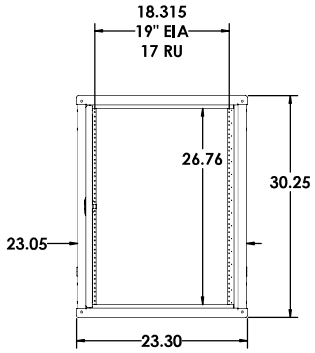

ST-30DD

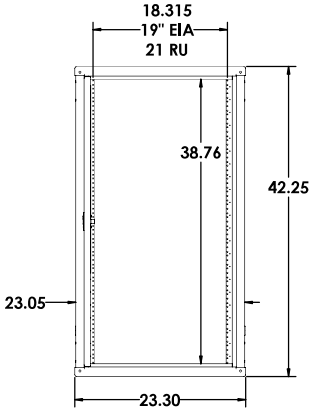

IOD-42D

30D DIAMOND VOGEL, BEIGE GLOSS TEXTURE ET-8320
30DX DIAMOND VOGEL, BEIGE GLOSS TEXTURE ET-8320
30DD DIAMOND VOGEL, BEIGE GLOSS TEXTURE ET-8320
42D DIAMOND VOGEL, BEIGE GLOSS TEXTURE ET-8320
42DX DIAMOND VOGEL, BEIGE GLOSS TEXTURE ET-8320
42DD DIAMOND VOGEL, BEIGE GLOSS TEXTURE ET-8320
62DXB DIAMOND VOGEL, BLACK RIVER TEXTURE ET-9384

UNLESS OTHERWISE SPECIFIED:
DIMENSIONS ARE IN INCHES
ANGULAR: ±1°
FRACTIONAL ±1/32
TWO PLACE DECIMAL ±0.030
THREE PLACE DECIMAL ±0.010
ALL HOLES Ø.005 Ⓜ B Ⓜ
MATERIAL: Material <not specified>
FINISH:
DO NOT SCALE DRAWING

DDB Unlimited Inc.
30D

SIZE	Cage Code:	DWG. NO.:	REV
D	3S5Y5	00070	E
SCALE: 1:8	WEIGHT: 49 lbs.	SHEET 3 OF 4	

09/19/24

UNCLASSIFIED PUBLIC

File Location: (DDB)(EPDM Vault) C:\DDB\DR Requests\Customers\DDB WEB DWG\ST-XXXX\

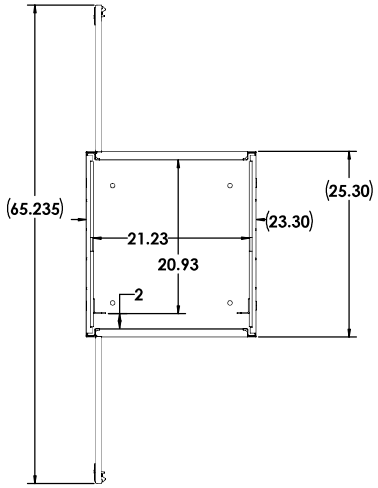

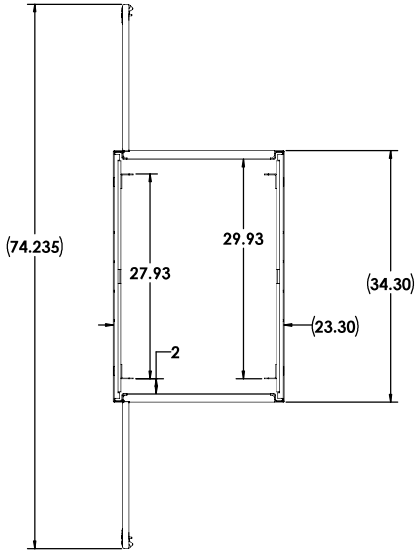

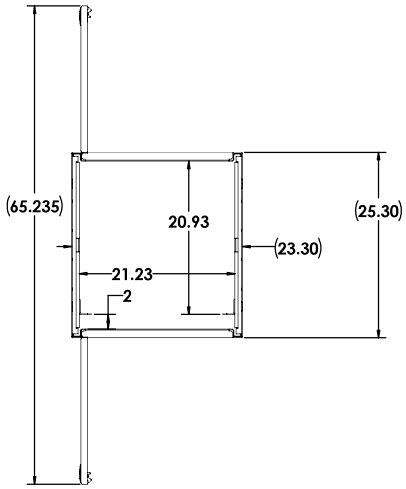

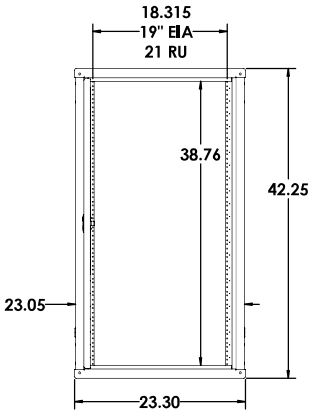

ST-42DX

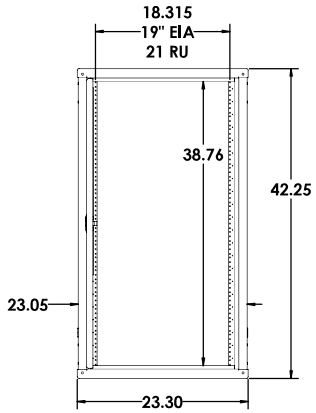

ST-42DD

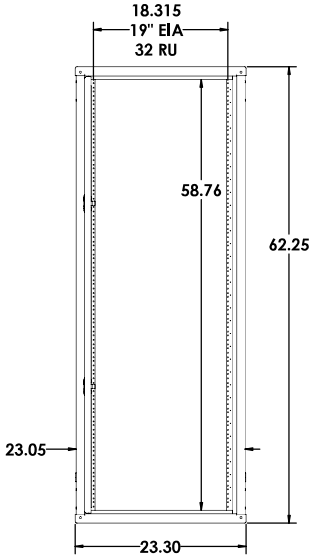

ST-62DXB

UNLESS OTHERWISE SPECIFIED:	DDB Unlimited Inc.			
DIMENSIONS ARE IN INCHES	42DD			
ANGULAR: ±1°	SIZE	Cage Code:	DWG. NO.:	REV
FRACTIONAL ±1/64 DECIMAL: ±0.1250	D	385Y5	00070	E
TWO PLACE DECIMAL: ±0.0500	SCALE: 1:8	WEIGHT: 92 lbs.		SHEET 4 OF 4
THREE PLACE DECIMAL: ±0.0150				
AS PER ASME Y14.5M-1994				
MATERIAL: SS304+#2B+CTD 1100 ASTM B209Mgr16				
PAINT: TEXMARK POWDER, WHITE GLOSS TEXTURE TM5329				
DO NOT SCALE DRAWING				

09/19/24

PROPRIETARY AND CONFIDENTIAL
THE INFORMATION CONTAINED IN THIS DRAWING IS THE SOLE PROPERTY OF DDB Unlimited, INC. ANY REPRODUCTION IN PART OR AS A WHOLE WITHOUT THE WRITTEN PERMISSION OF DDB Unlimited, INC. IS PROHIBITED.

File Location: (DDB)(EPDM Vault) C:\DDB\DR Requests\Customers\DDB WEB DWG\ST-XXXX\

DDB UNLIMITED®

An ISO 9001 Certified company

ST Series

ST-30DD

Made in America

Believing in American Craftsmanship

15 YEAR WARRANTY

Why Choose the ST Series?

The ST series of enclosures are the ultimate choice for your indoor racking requirements. Being made of our own rugged Alumiflex®, you'll find it noticeably lighter than steel, yet strong enough to rack even the heaviest equipment. When choosing the ST series, you have handpicked the highest value in American construction. The ST-30DD includes the standard features you have come to expect with DDB, incorporating the versatile strut system for adjustable racking, the security of a lockable slam-latch system and easy clean filters. For those who need more than just our standard enclosure, DDB can also make a truly customized solution with our many available options including fan kits, heater strips, mounting trays, & cable management. All of this comes together to create an enclosure able to meet all of the unique needs our customers have been seeking. DDB offers a state-of-the-art design, a competitive price, benchmark lead times and a guaranteed delivery, all backed up with an industry leading 15-year warranty on every enclosure. Put DDB's substantial stock to work for you today. Contact our professional staff to assist you with your made-to-order solution.



Application Types

Telecommunications
Wireless/Broadband
Fiber Optics
Data Centers
Server rooms
Small Cell/DAS
Trailer-Base Communications
Public Safety

Utility
Military
Base Station
Backhaul
Wi-Fi
LTEE/4G/5G



Environmental & Safety Ratings:

✓ NEMA 2

Features

15 Year Warranty
0.100” Aluminum Construction
Stainless Steel External Hardware/Hinge
Lockable Slam-Latch
Heavy Duty Indoor Construction
Front and Rear Access
Cream Powder-Coat, Standard
Flexible and Scalable
Quick Shipping

Weight and Dimensions

Approximate Exterior Enclosure Dimensions:
30”H x 24”W x 34”D
Shipping Dimensions:
42”D x 32”W -Palletized
Approximate Shipping Weight:
103 lbs.

2301 S. HWY 77 Pauls Valley, OK 73075
T: (405)-665-2876
sales@ddbunlimited.com www.ddbunlimited.com

DDB UNLIMITED®
An ISO 9001 Certified company

ST Series

ST-30DD

Made in America
Believing in American Craftsmanship
WARRANTY 15 YEAR WARRANTY

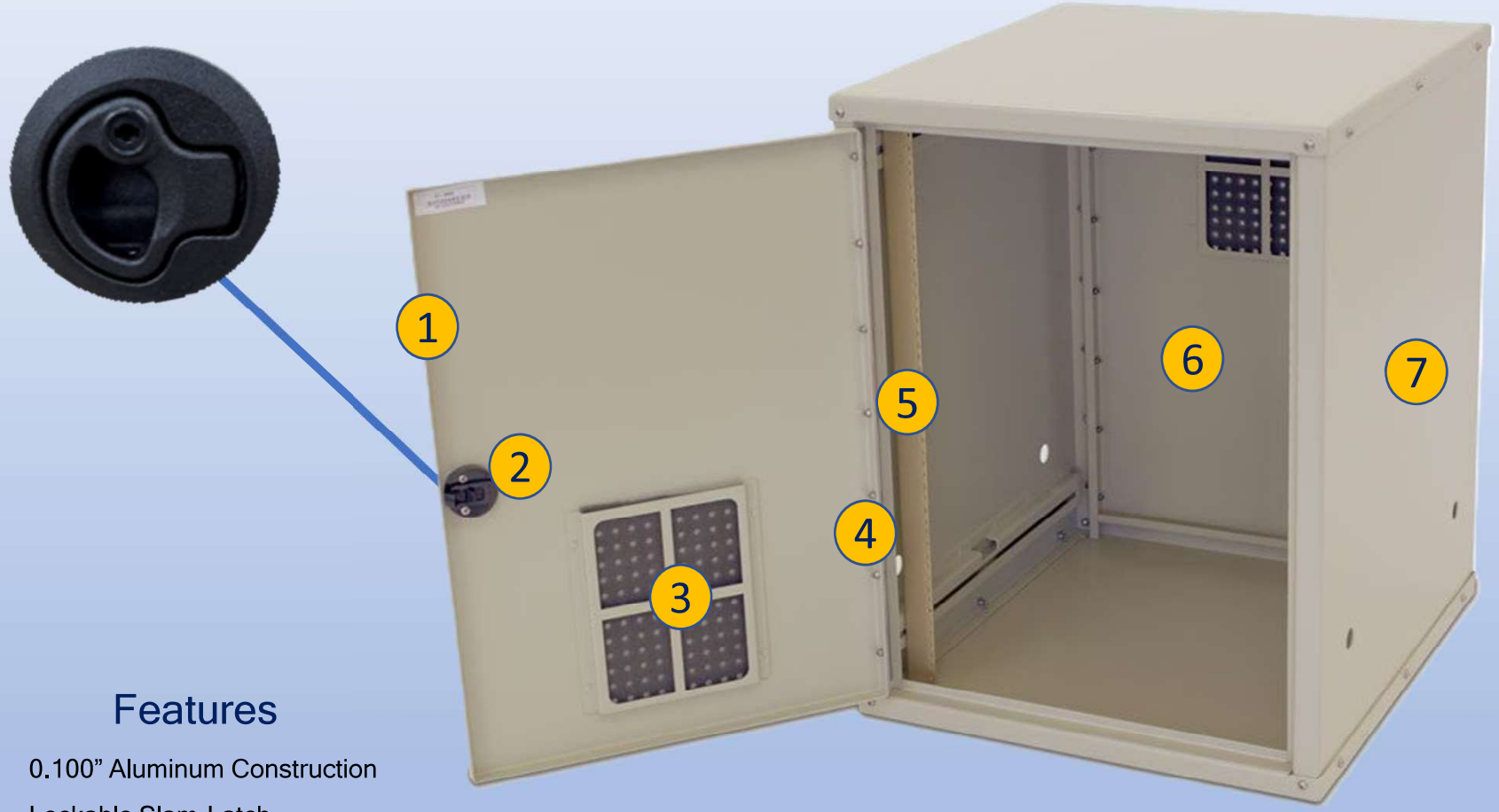

Features

1. 0.100” Aluminum Construction
2. Lockable Slam-Latch
3. Reusable Foam Filters
4. Stainless Stell Door Hinge
5. 19” Adjustable Racking Rails
6. Rear Door Access
7. Powder Coat Cream

Scan this code for Climate Control

Scan this code for Accessories

2301 S. HWY 77 Pauls Valley, OK 73075
T: (405)-665-2876
sales@ddbunlimited.com www.ddbunlimited.com

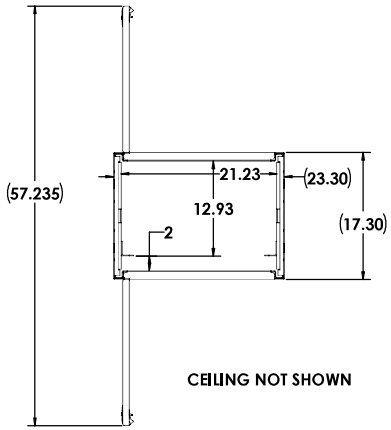

CEILING NOT SHOWN

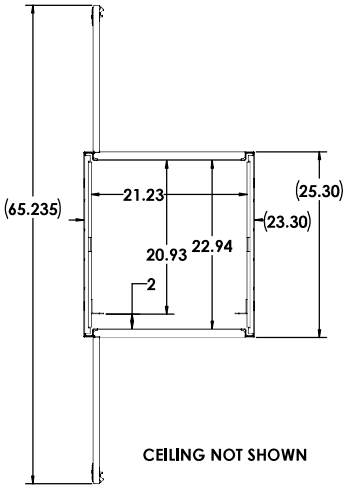

CEILING NOT SHOWN

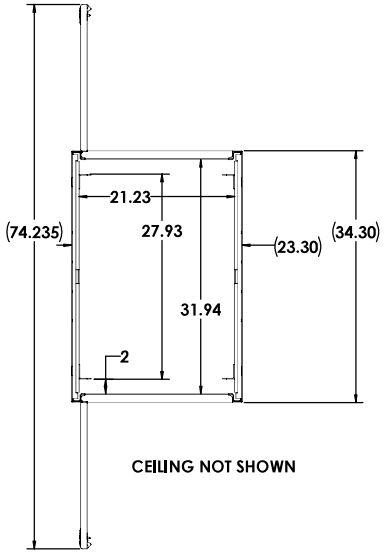

CEILING NOT SHOWN

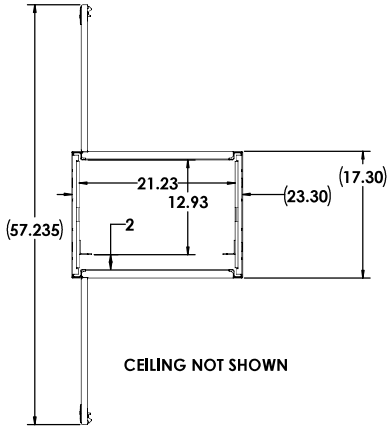

CEILING NOT SHOWN

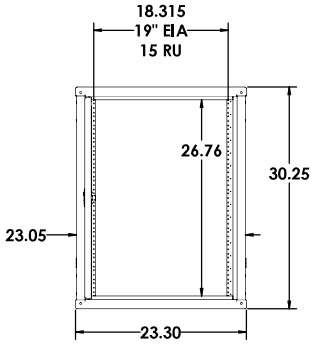

ST-30D

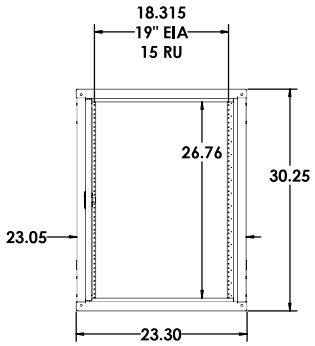

ST-30DX

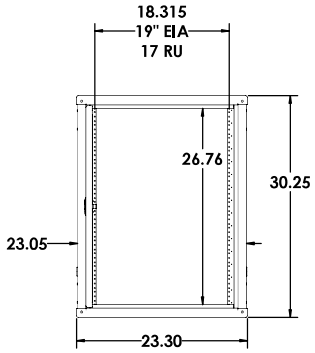

ST-30DD

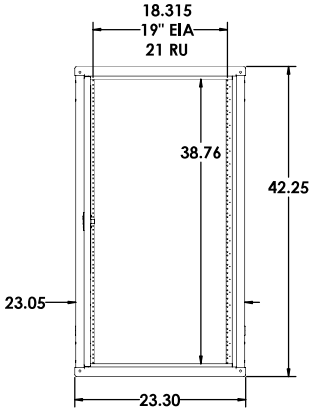

IOD-42D

30D DIAMOND VOGEL, BEIGE GLOSS TEXTURE ET-8320
30DX DIAMOND VOGEL, BEIGE GLOSS TEXTURE ET-8320
30DD DIAMOND VOGEL, BEIGE GLOSS TEXTURE ET-8320
42D DIAMOND VOGEL, BEIGE GLOSS TEXTURE ET-8320
42DX DIAMOND VOGEL, BEIGE GLOSS TEXTURE ET-8320
42DD DIAMOND VOGEL, BEIGE GLOSS TEXTURE ET-8320
62DXB DIAMOND VOGEL, BLACK RIVER TEXTURE ET-9384

UNLESS OTHERWISE SPECIFIED:
DIMENSIONS ARE IN INCHES
ANGULAR: ±1°
FRACTIONAL ±1/32
TWO PLACE DECIMAL ±0.030
THREE PLACE DECIMAL ±0.010
ALL HOLES Ø.005 Ⓜ B Ⓜ
MATERIAL: Material <not specified>
FINISH:
DO NOT SCALE DRAWING

DDB Unlimited Inc.
30D

SIZE	Cage Code:	DWG. NO.:	REV
D	3S5Y5	00070	E
SCALE: 1:8	WEIGHT: 49 lbs.	SHEET 3 OF 4	

09/19/24

UNCLASSIFIED PUBLIC

File Location: (DDB)(EPDM Vault) C:\DDB\DR Requests\Customers\DDB WEB DWG\ST-XXXX\

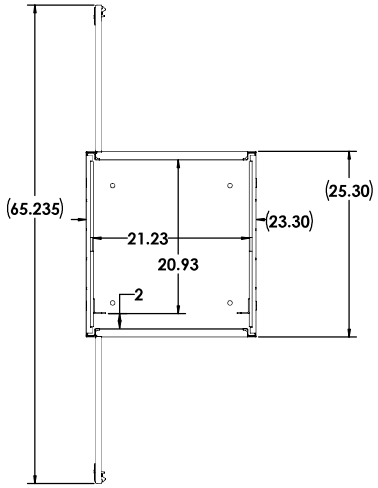

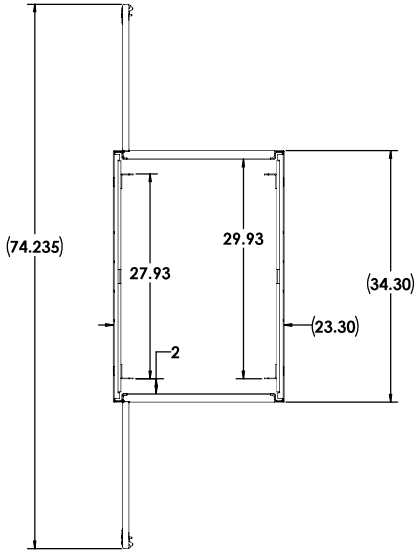

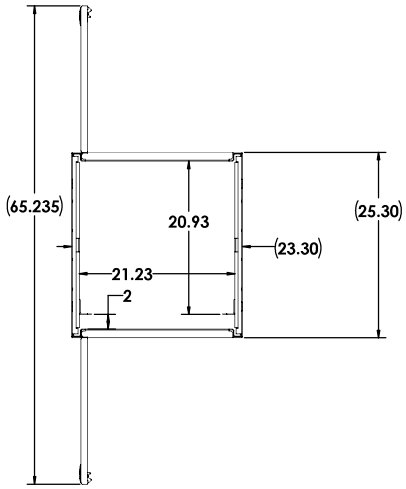

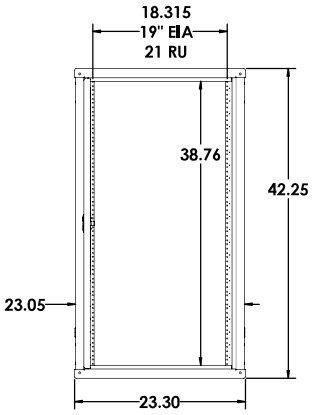

ST-42DX

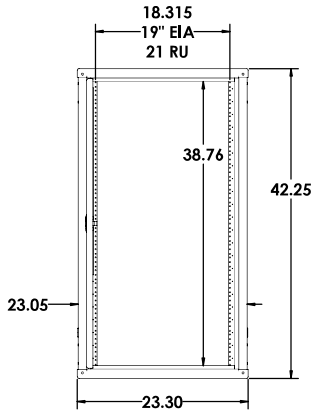

ST-42DD

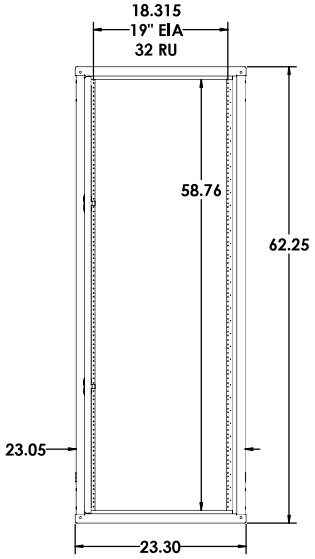

ST-62DXB

UNLESS OTHERWISE SPECIFIED:	DDB Unlimited Inc.			
DIMENSIONS ARE IN INCHES	42DD			
ANGULAR: ±1°	SIZE	Cage Code:	DWG. NO.:	REV
FRACTIONAL ±1/64 DECIMAL: ±0.1250	D	385Y5	00070	E
TWO PLACE DECIMAL: ±0.0500	SCALE: 1:8	WEIGHT: 92 lbs.		SHEET 4 OF 4
THREE PLACE DECIMAL: ±0.0150				
AS PER ASME Y14.5M-1994				
MATERIAL: SS304+#2B+CTD 1100 ASTM B209Mgr16				
PAINT: TEXMARK POWDER, WHITE GLOSS TEXTURE TM5329				
DO NOT SCALE DRAWING				

09/19/24

PROPRIETARY AND CONFIDENTIAL
THE INFORMATION CONTAINED IN THIS DRAWING IS THE SOLE PROPERTY OF DDB Unlimited, INC. ANY REPRODUCTION IN PART OR AS A WHOLE WITHOUT THE WRITTEN PERMISSION OF DDB Unlimited, INC. IS PROHIBITED.

File Location: (DDB)(EPDM Vault) C:\DDB\DR Requests\Customers\DDB WEB DWG\ST-XXXX\

DDB UNLIMITED®

An ISO 9001 Certified company

ST Series

ST-42D

Made in America

Believing in American Craftsmanship

15 YEAR WARRANTY

Why Choose the ST Series?



The ST series of enclosures are the ultimate choice for your indoor racking requirements. Being made of our own rugged Alumiflex®, you'll find it noticeably lighter than steel, yet strong enough to rack even the heaviest equipment. When choosing the ST series, you have handpicked the highest value in American construction. The ST-42D includes the standard features you have come to expect with DDB, incorporating the versatile strut system for adjustable racking, the security of a lockable slam-latch system and easy clean filters. For those who need more than just our standard enclosure, DDB can also make a truly customized solution with our many available options including fan kits, heater strips, mounting trays, & cable management. All of this comes together to create an enclosure able to meet all of the unique needs our customers have been seeking. DDB offers a state-of-the-art design, a competitive price, benchmark lead times and a guaranteed delivery, all backed up with an industry leading 15-year warranty on every enclosure. Put DDB's substantial stock to work for you today. Contact our professional staff to assist you with your made-to-order solution.

Application Types

Telecommunications

Wireless/Broadband

Fiber Optics

Data Centers

Server rooms

Small Cell/DAS

Trailer-Base Communications

Public Safety

Utility

Military

Base Station

Backhaul

Wi-Fi

LTEE/4G/5G



Environmental & Safety Ratings:

✓ NEMA 2

Features

15 Year Warranty

0.100” Aluminum Construction

Stainless Steel External Hardware/Hinge

Lockable Slam-Latch

Heavy Duty Indoor Construction

Front and Rear Access

Cream Powder-Coat, Standard

Flexible and Scalable

Quick Shipping

Weight and Dimensions

Approximate Exterior Enclosure Dimensions:

42”H x 23”W x 17”D

Shipping Dimensions:

42”D x 32”W-Palletized

Approximate Shipping Weight:

103 lbs.

2301 S. HWY 77 Pauls Valley, OK 73075

T: (405)-665-2876

sales@ddbunlimited.com www.ddbunlimited.com

DDB UNLIMITED®
An ISO 9001 Certified company

ST Series

ST-42D

Made in America
Believing in American Craftsmanship
15 YEAR WARRANTY

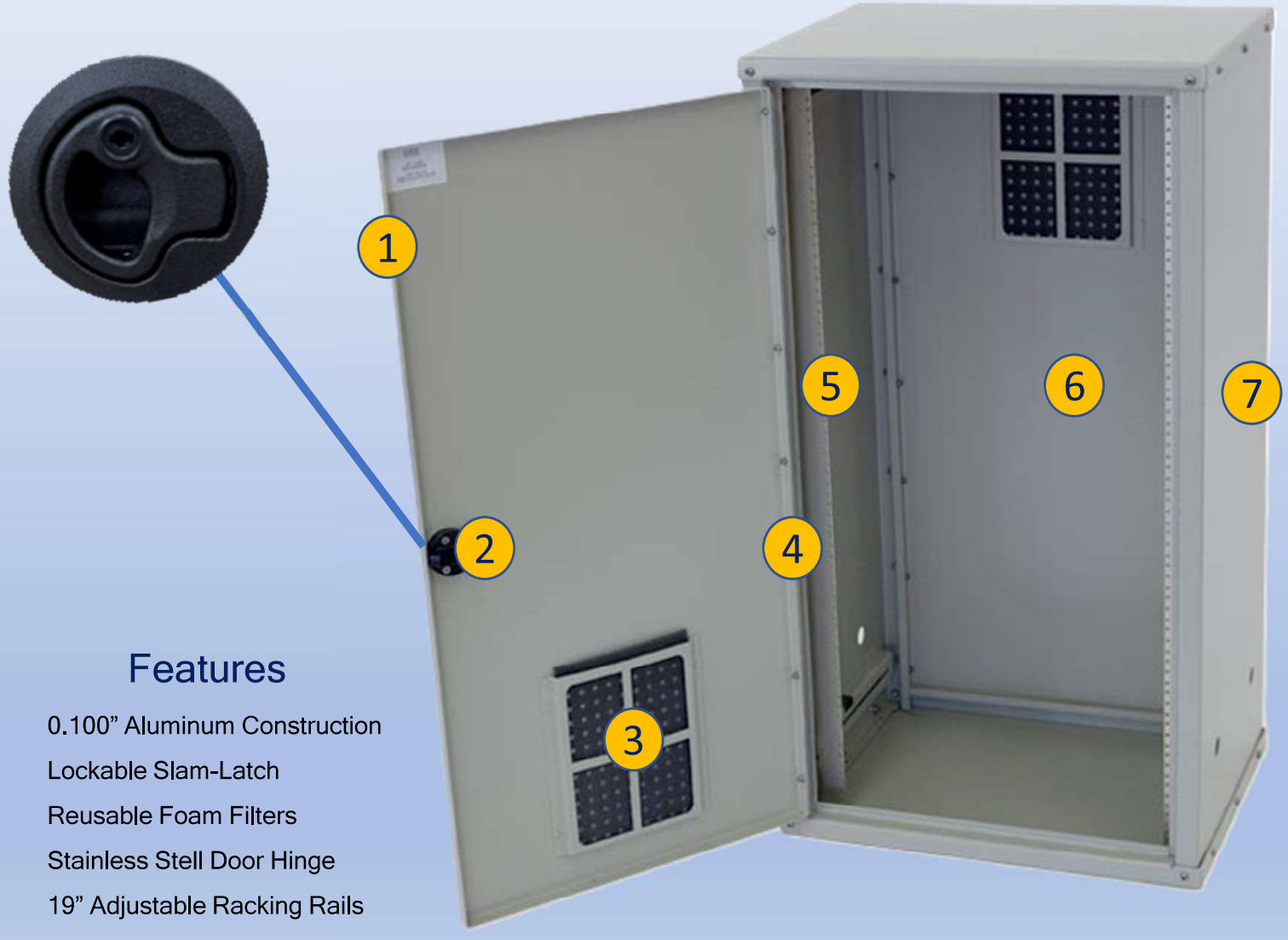

Features

1. 0.100” Aluminum Construction
2. Lockable Slam-Latch
3. Reusable Foam Filters
4. Stainless Stell Door Hinge
5. 19” Adjustable Racking Rails
6. Rear Door Access
7. Powder Coat Cream

2301 S. HWY 77 Pauls Valley, OK 73075
T: (405)-665-2876
sales@ddbunlimited.com www.ddbunlimited.com

Scan this code for Climate Control

Scan this code for Accessories

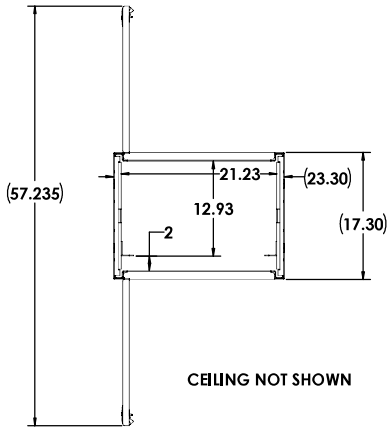

CEILING NOT SHOWN

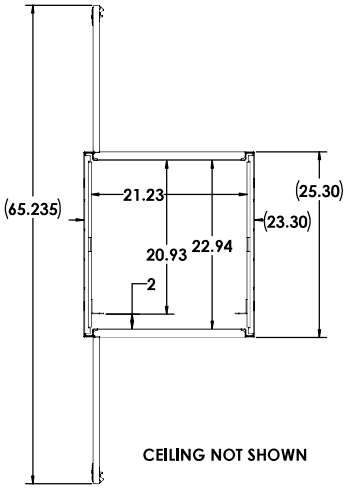

CEILING NOT SHOWN

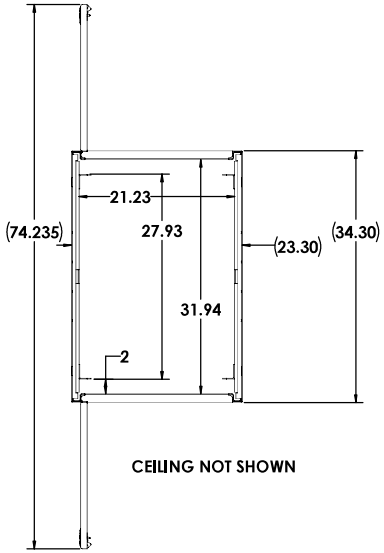

CEILING NOT SHOWN

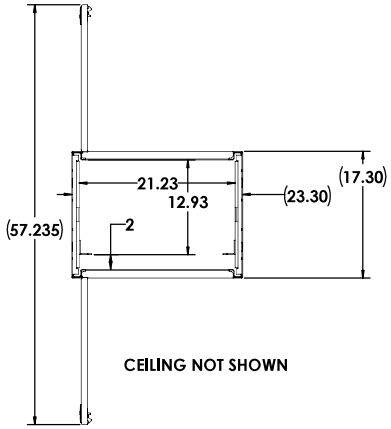

CEILING NOT SHOWN

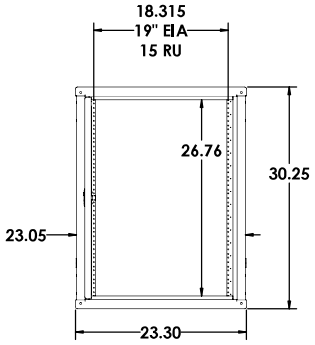

ST-30D

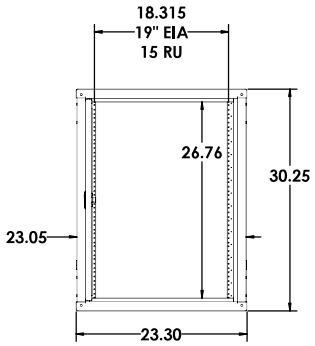

ST-30DX

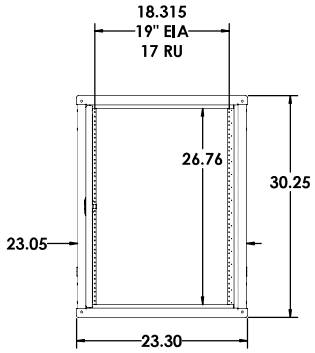

ST-30DD

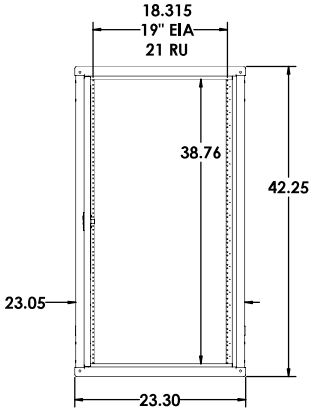

IOD-42D

30D DIAMOND VOGEL, BEIGE GLOSS TEXTURE ET-8320
30DX DIAMOND VOGEL, BEIGE GLOSS TEXTURE ET-8320
30DD DIAMOND VOGEL, BEIGE GLOSS TEXTURE ET-8320
42D DIAMOND VOGEL, BEIGE GLOSS TEXTURE ET-8320
42DX DIAMOND VOGEL, BEIGE GLOSS TEXTURE ET-8320
42DD DIAMOND VOGEL, BEIGE GLOSS TEXTURE ET-8320
62DXB DIAMOND VOGEL, BLACK RIVER TEXTURE ET-9384

UNLESS OTHERWISE SPECIFIED:
DIMENSIONS ARE IN INCHES
ANGULAR: ±1°
FRACTIONAL ±1/32
TWO PLACE DECIMAL ±0.030
THREE PLACE DECIMAL ±0.010
ALL HOLES Ø.005 Ⓜ B Ⓜ
MATERIAL: Material <not specified>
FINISH:
DO NOT SCALE DRAWING

DDB Unlimited Inc.
30D

SIZE	Cage Code:	DWG. NO.:	REV
D	3S5Y5	00070	E
SCALE: 1:8	WEIGHT: 49 lbs.	SHEET 3 OF 4	

09/19/24

UNCLASSIFIED PUBLIC

File Location: (DDB)(EPDM Vault) C:\DDB\DR Requests\Customers\DDB WEB DWG\ST-XXXX\

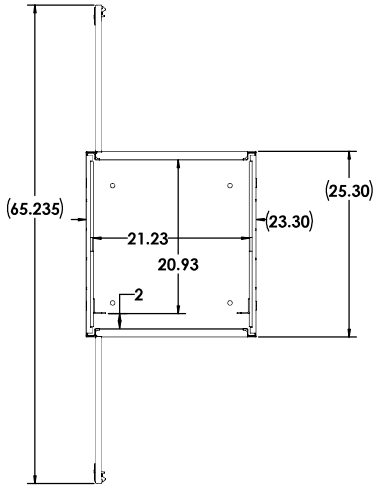

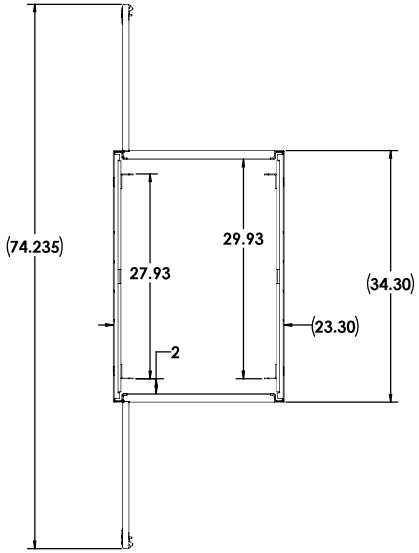

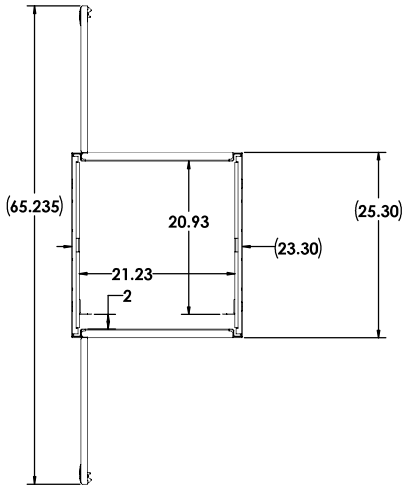

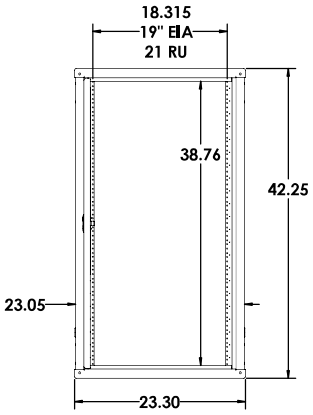

ST-42DX

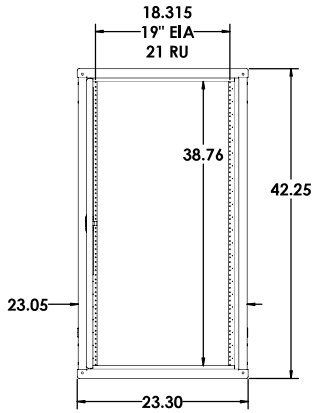

ST-42DD

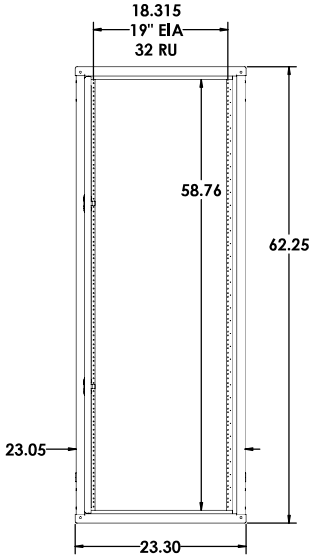

ST-62DXB

UNLESS OTHERWISE SPECIFIED:	DDB Unlimited Inc.			
DIMENSIONS ARE IN INCHES	42DD			
ANGULAR: ±1°	SIZE	Cage Code:	DWG. NO.:	REV
FRACTIONAL ±1/64 DECIMAL: ±0.1250	D	385Y5	00070	E
TWO PLACE DECIMAL: ±0.0500	SCALE: 1:8	WEIGHT: 92 lbs.		SHEET 4 OF 4
THREE PLACE DECIMAL: ±0.0150				
AS PER ASME Y14.5M-1994				
MATERIAL: SS304+#2B+CTD 1100 ASTM B209Mgr16				
PAINT: TEXMARK POWDER, WHITE GLOSS TEXTURE TM5329				
DO NOT SCALE DRAWING				

09/19/24

PROPRIETARY AND CONFIDENTIAL
THE INFORMATION CONTAINED IN THIS DRAWING IS THE SOLE PROPERTY OF DDB Unlimited, INC. ANY REPRODUCTION IN PART OR AS A WHOLE WITHOUT THE WRITTEN PERMISSION OF DDB Unlimited, INC. IS PROHIBITED.

File Location: (DDB)(EPDM Vault) C:\DDB\DR Requests\Customers\DDB WEB DWG\ST-XXXX\

DDB UNLIMITED®

An ISO 9001 Certified company

ST Series

ST-42DX

Made in America

Believing in American Craftsmanship

15 YEAR WARRANTY

Why Choose the ST Series?



The ST series of enclosures are the ultimate choice for your indoor racking requirements. Being made of our own rugged Alumiflex®, you'll find it noticeably lighter than steel, yet strong enough to rack even the heaviest equipment. When choosing the ST series, you have handpicked the highest value in American construction. The ST-42DX includes the standard features you have come to expect with DDB, incorporating the versatile strut system for adjustable racking, the security of a lockable slam-latch system and easy clean filters. For those who need more than just our standard enclosure, DDB can also make a truly customized solution with our many available options including fan kits, heater strips, mounting trays, & cable management. All of this comes together to create an enclosure able to meet all of the unique needs our customers have been seeking. DDB offers a state-of-the-art design, a competitive price, benchmark lead times and a guaranteed delivery, all backed up with an industry leading 15-year warranty on every enclosure. Put DDB's substantial stock to work for you today. Contact our professional staff to assist you with your made-to-order solution.

Features

15 Year Warranty

0.100” Aluminum Construction

Stainless Steel External Hardware/Hinge

Lockable Slam-Latch

Heavy Duty Indoor Construction

Front and Rear Access

Cream Powder-Coat, Standard

Flexible and Scalable

Quick Shipping

Application Types

Telecommunications

Wireless/Broadband

Fiber Optics

Data Centers

Server rooms

Small Cell/DAS

Trailer-Base Communications

Public Safety

Utility

Military

Base Station

Backhaul

Wi-Fi

LTEE/4G/5G



Environmental & Safety Ratings:

✓ NEMA 2

Weight and Dimensions

Approximate Exterior Enclosure Dimensions:

44”H x 23”W x 25”D

Shipping Dimensions:

42”D x 32”W- Palletized

Approximate Shipping Weight:

103 lbs.

2301 S. HWY 77 Pauls Valley, OK 73075

T: (405)-665-2876

sales@ddbunlimited.com www.ddbunlimited.com

DDB UNLIMITED®
An ISO 9001 Certified company

ST Series

ST-42DX

Made in America
Believing in American Craftsmanship
WARRANTY 15 YEAR WARRANTY



Features

1. 0.100” Aluminum Construction
2. Lockable Slam-Latch
3. Reusable Foam Filters
4. Stainless Stell Door Hinge
5. 19” Adjustable Racking Rails
6. Rear Door Access
7. Powder Coat Cream

Scan this code for Climate Control

Scan this code for Accessories

2301 S. HWY 77 Pauls Valley, OK 73075
T: (405)-665-2876
sales@ddbunlimited.com www.ddbunlimited.com

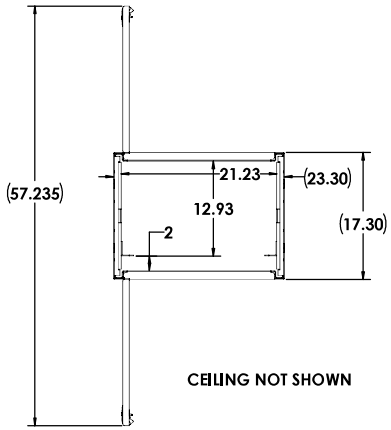

CEILING NOT SHOWN

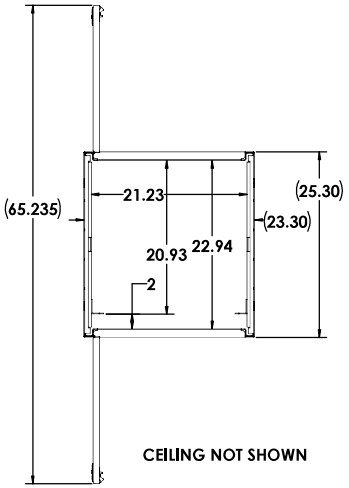

CEILING NOT SHOWN

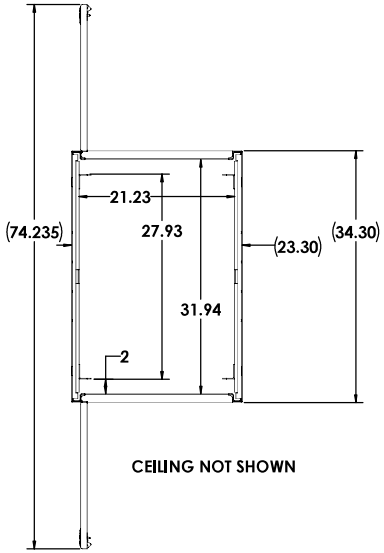

CEILING NOT SHOWN

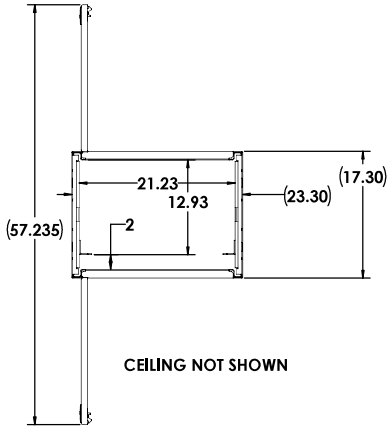

CEILING NOT SHOWN

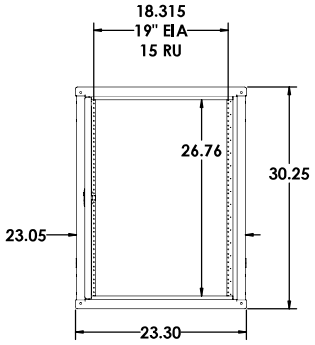

ST-30D

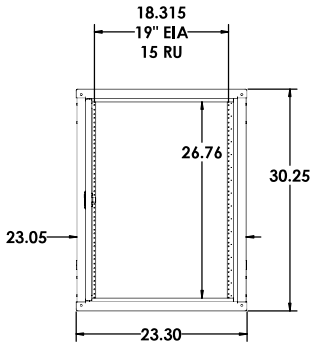

ST-30DX

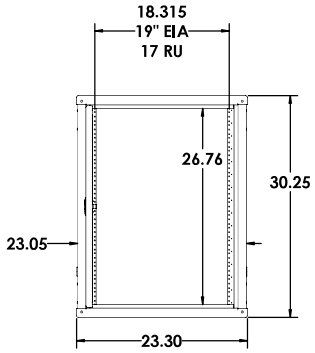

ST-30DD

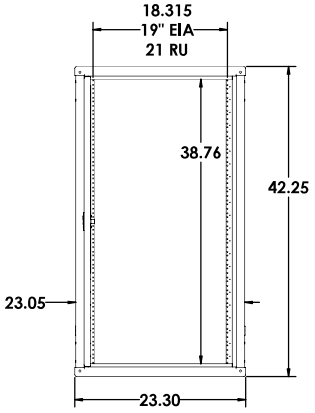

IOD-42D

30D DIAMOND VOGEL, BEIGE GLOSS TEXTURE ET-8320
30DX DIAMOND VOGEL, BEIGE GLOSS TEXTURE ET-8320
30DD DIAMOND VOGEL, BEIGE GLOSS TEXTURE ET-8320
42D DIAMOND VOGEL, BEIGE GLOSS TEXTURE ET-8320
42DX DIAMOND VOGEL, BEIGE GLOSS TEXTURE ET-8320
42DD DIAMOND VOGEL, BEIGE GLOSS TEXTURE ET-8320
62DXB DIAMOND VOGEL, BLACK RIVER TEXTURE ET-9384

UNLESS OTHERWISE SPECIFIED:
DIMENSIONS ARE IN INCHES
ANGULAR: ±1°
FRACTIONAL ±1/32
TWO PLACE DECIMAL ±0.030
THREE PLACE DECIMAL ±0.010
ALL HOLES Ø.005 Ⓜ B Ⓜ
MATERIAL: Material <not specified>
FINISH:
DO NOT SCALE DRAWING

DDB Unlimited Inc.
30D

SIZE	Cage Code:	DWG. NO.:	REV
D	3S5Y5	00070	E
SCALE: 1:8	WEIGHT: 49 lbs.	SHEET 3 OF 4	

09/19/24

UNCLASSIFIED PUBLIC

File Location: (DDB)(EPDM Vault) C:\DDB\DR Requests\Customers\DDB WEB DWG\ST-XXXX\

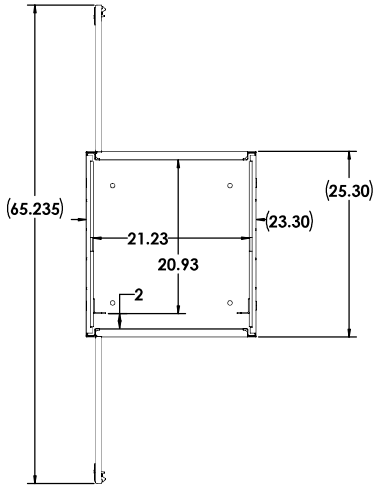

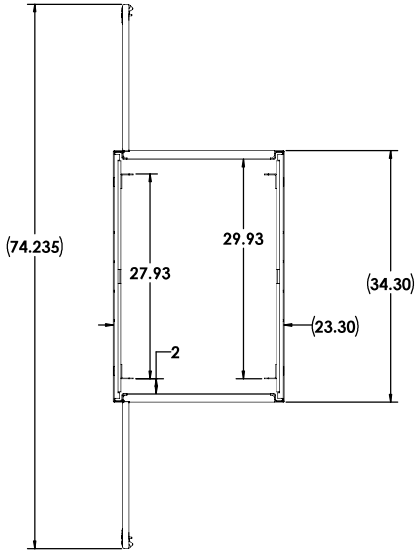

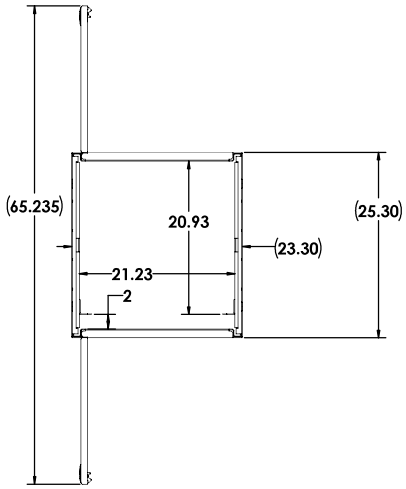

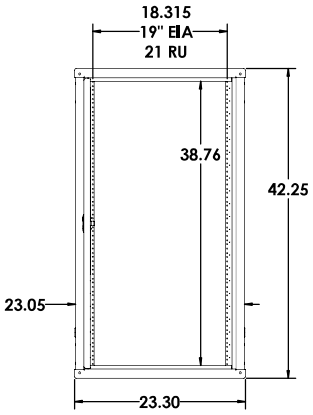

ST-42DX

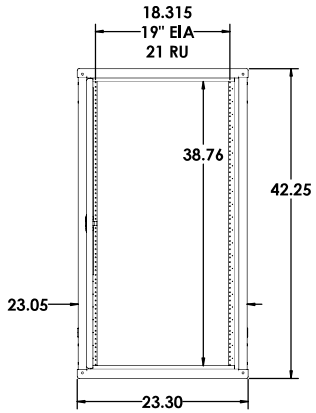

ST-42DD

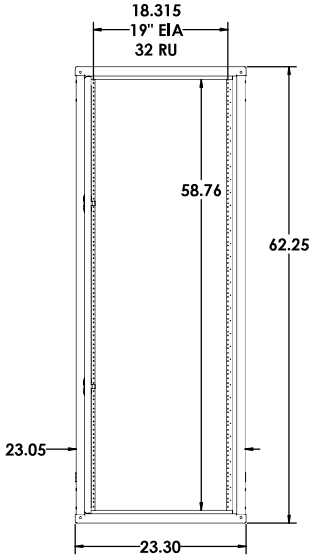

ST-62DXB

UNLESS OTHERWISE SPECIFIED:	DDB Unlimited Inc.			
DIMENSIONS ARE IN INCHES	42DD			
ANGULAR: ±1°	SIZE	Cage Code:	DWG. NO.:	REV
FRACTIONAL ±1/64 DECIMAL: ±0.1250	D	385Y5	00070	E
TWO PLACE DECIMAL: ±0.0500	SCALE: 1:8	WEIGHT: 92 lbs.		SHEET 4 OF 4
THREE PLACE DECIMAL: ±0.0150				
AS PER ASME Y14.5M-1994				
MATERIAL: SS304+#2B+CTD 1100 ASTM B209Mgr16				
PAINT: TEXMARK POWDER, WHITE GLOSS TEXTURE TM5329				
DO NOT SCALE DRAWING				

09/19/24

PROPRIETARY AND CONFIDENTIAL
THE INFORMATION CONTAINED IN THIS DRAWING IS THE SOLE PROPERTY OF DDB Unlimited, INC. ANY REPRODUCTION IN PART OR AS A WHOLE WITHOUT THE WRITTEN PERMISSION OF DDB Unlimited, INC. IS PROHIBITED.

File Location: (DDB)(EPDM Vault) C:\DDB\DR Requests\Customers\DDB WEB DWG\ST-XXXX\

DDB UNLIMITED®

An ISO 9001 Certified company

ST Series

ST-42DD

Made in America

Believing in American Craftsmanship

15 YEAR WARRANTY

Why Choose the ST Series?



The ST series of enclosures are the ultimate choice for your indoor racking requirements. Being made of our own rugged Alumiflex®, you'll find it noticeably lighter than steel, yet strong enough to rack even the heaviest equipment. When choosing the ST series, you have handpicked the highest value in American construction. The ST-42DD includes the standard features you have come to expect with DDB, incorporating the versatile strut system for adjustable racking, the security of a lockable slam-latch system and easy clean filters. For those who need more than just our standard enclosure, DDB can also make a truly customized solution with our many available options including fan kits, heater strips, mounting trays, & cable management. All of this comes together to create an enclosure able to meet all of the unique needs our customers have been seeking. DDB offers a state-of-the-art design, a competitive price, benchmark lead times and a guaranteed delivery, all backed up with an industry leading 15-year warranty on every enclosure. Put DDB's substantial stock to work for you today. Contact our professional staff to assist you with your made-to-order solution.

Application Types

Telecommunications

Wireless/Broadband

Fiber Optics

Data Centers

Server rooms

Small Cell/DAS

Trailer-Base Communications

Public Safety

Utility

Military

Base Station

Backhaul

Wi-Fi

LTEE/4G/5G



Environmental & Safety Ratings:

✓ NEMA 2

Features

15 Year Warranty

0.100” Aluminum Construction

Stainless Steel External Hardware/Hinge

Lockable Slam-Latch

Heavy Duty Indoor Construction

Front and Rear Access

Cream Powder-Coat, Standard

Flexible and Scalable

Quick Shipping

Weight and Dimensions

Approximate Exterior Enclosure Dimensions:

42”H x 23”W x 34”D

Shipping Dimensions:

42”D x 32”W Palletized

Approximate Shipping Weight:

122 lbs.

2301 S. HWY 77 Pauls Valley, OK 73075

T: (405)-665-2876

sales@ddbunlimited.com www.ddbunlimited.com

DDB UNLIMITED®
An ISO 9001 Certified company

ST Series

ST-42DD

Made in America
Believing in American Craftsmanship
15 YEAR WARRANTY



Features

1. 0.100” Aluminum Construction
2. Lockable Slam-Latch
3. Reusable Foam Filters
4. Stainless Stell Door Hinge
5. 19” Adjustable Racking Rails
6. Rear Door Access
7. Powder Coat Cream

2301 S. HWY 77 Pauls Valley, OK 73075
T: (405)-665-2876
sales@ddbunlimited.com www.ddbunlimited.com

Scan this code for Climate Control

Scan this code for Accessories

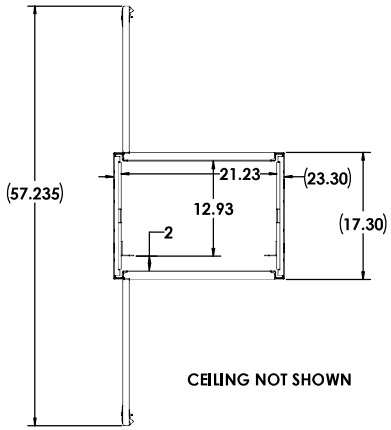

CEILING NOT SHOWN

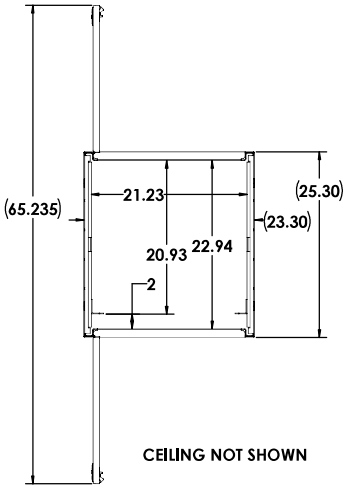

CEILING NOT SHOWN

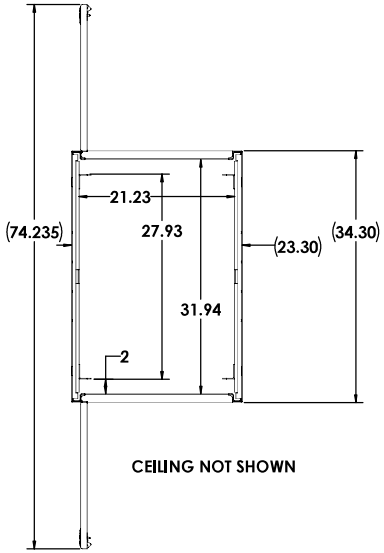

CEILING NOT SHOWN

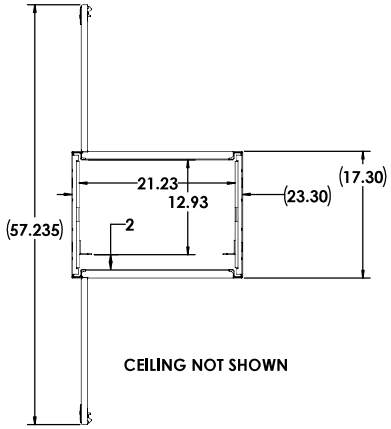

CEILING NOT SHOWN

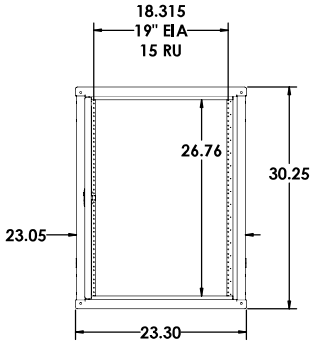

ST-30D

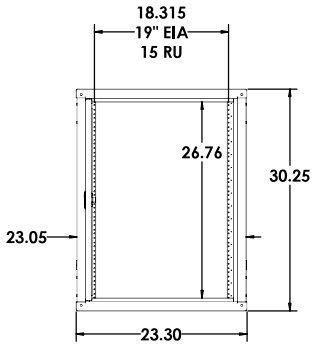

ST-30DX

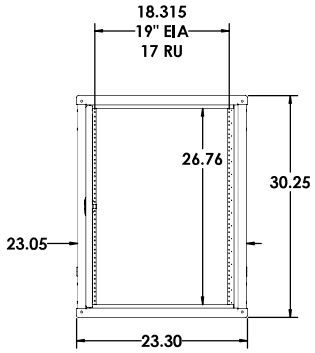

ST-30DD

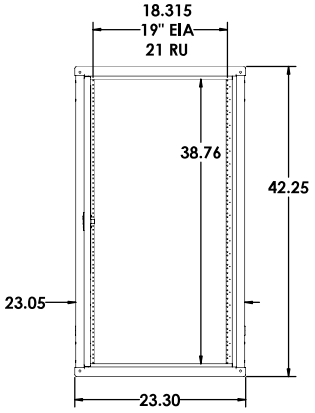

IOD-42D

30D DIAMOND VOGEL, BEIGE GLOSS TEXTURE ET-8320
30DX DIAMOND VOGEL, BEIGE GLOSS TEXTURE ET-8320
30DD DIAMOND VOGEL, BEIGE GLOSS TEXTURE ET-8320
42D DIAMOND VOGEL, BEIGE GLOSS TEXTURE ET-8320
42DX DIAMOND VOGEL, BEIGE GLOSS TEXTURE ET-8320
42DD DIAMOND VOGEL, BEIGE GLOSS TEXTURE ET-8320
62DXB DIAMOND VOGEL, BLACK RIVER TEXTURE ET-9384

UNLESS OTHERWISE SPECIFIED:
DIMENSIONS ARE IN INCHES
ANGULAR: ±1°
FRACTIONAL ±1/32
TWO PLACE DECIMAL ±0.030
THREE PLACE DECIMAL ±0.010
ALL HOLES Ø.005 Ⓜ B Ⓜ
MATERIAL: Material <not specified>
FINISH:
DO NOT SCALE DRAWING

DDB Unlimited Inc.
30D

SIZE	Cage Code:	DWG. NO.:	REV
D	3S5Y5	00070	E
SCALE: 1:8	WEIGHT: 49 lbs.	SHEET 3 OF 4	

09/19/24

UNCLASSIFIED PUBLIC

File Location: (DDB)(EPDM Vault) C:\DDB\DR Requests\Customers\DDB WEB DWG\ST-XXXX\

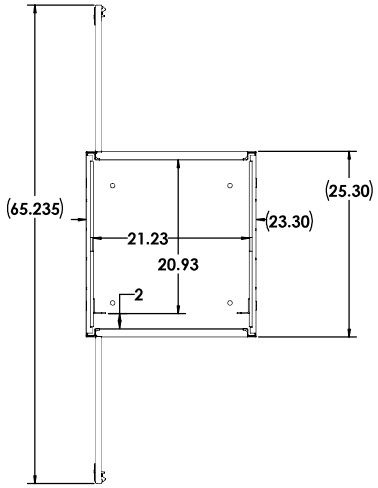

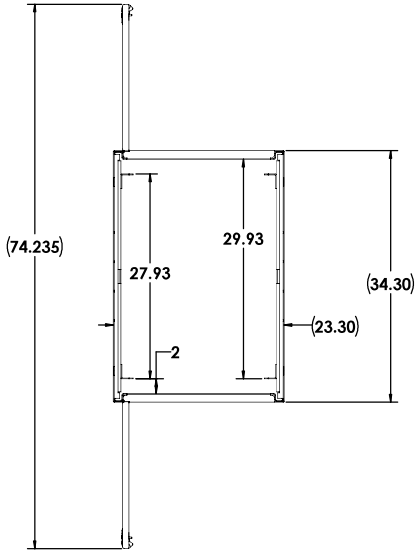

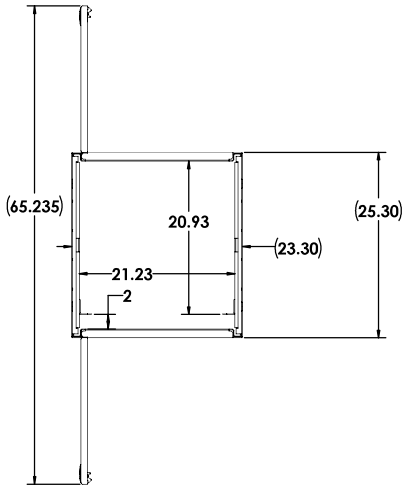

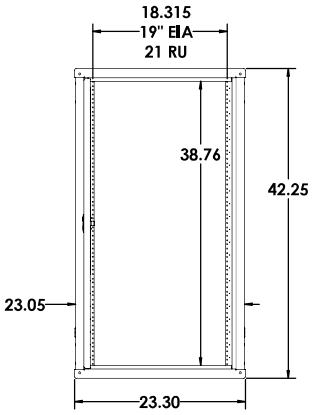

ST-42DX

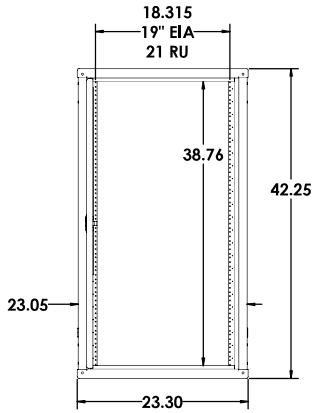

ST-42DD

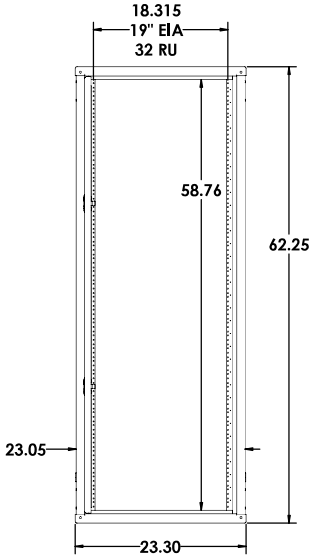

ST-62DXB

UNLESS OTHERWISE SPECIFIED:	DDB Unlimited Inc.			
DIMENSIONS ARE IN INCHES	42DD			
ANGULAR: ±1°	SIZE	Cage Code:	DWG. NO.:	REV
FRACTIONAL ±1/64 DECIMAL: ±0.1250	D	385Y5	00070	E
TWO PLACE DECIMAL: ±0.0500	SCALE: 1:8	WEIGHT: 92 lbs.		SHEET 4 OF 4
THREE PLACE DECIMAL: ±0.0150				
AS PER ASME Y14.5M-1994				
MATERIAL: SS304+#2B+CTD 1100 ASTM B209Mgr16				
PAINT: TEXMARK POWDER, WHITE GLOSS TEXTURE TM5329				
DO NOT SCALE DRAWING				

09/19/24

PROPRIETARY AND CONFIDENTIAL
THE INFORMATION CONTAINED IN THIS DRAWING IS THE SOLE PROPERTY OF DDB Unlimited, INC. ANY REPRODUCTION IN PART OR AS A WHOLE WITHOUT THE WRITTEN PERMISSION OF DDB Unlimited, INC. IS PROHIBITED.

File Location: (DDB)(EPDM Vault) C:\DDB\DR Requests\Customers\DDB WEB DWG\ST-XXXX\

DDB UNLIMITED®

An ISO 9001 Certified company

ST Series

ST-62DXB

Made in America

Believing in American Craftsmanship

15 YEAR WARRANTY

Why Choose the ST Series?



The ST series of enclosures are the ultimate choice for your indoor racking requirements. Being made of our own rugged Alumiflex®, you'll find it noticeably lighter than steel, yet strong enough to rack even the heaviest equipment. When choosing the ST series, you have handpicked the highest value in American construction. The ST-62DXB includes the standard features you have come to expect with DDB, incorporating the versatile strut system for adjustable racking, the security of a lockable slam-latch system and easy clean filters. For those who need more than just our standard enclosure, DDB can also make a truly customized solution with our many available options including fan kits, heater strips, mounting trays, & cable management. All of this comes together to create an enclosure able to meet all of the unique needs our customers have been seeking. DDB offers a state-of-the-art design, a competitive price, benchmark lead times and a guaranteed delivery, all backed up with an industry leading 15-year warranty on every enclosure. Put DDB's substantial stock to work for you today. Contact our professional staff to assist you with your made-to-order solution.

Application Types

Telecommunications
Wireless/Broadband
Fiber Optics
Data Centers
Server rooms
Small Cell/DAS
Trailer-Base Communications
Public Safety

Utility
Military
Base Station
Backhaul
Wi-Fi
LTEE/4G/5G



Environmental & Safety Ratings:

✓ NEMA 2

Features

15 Year Warranty
0.100” Aluminum Construction
Stainless Steel External Hardware/Hinge
Lockable Slam-Latch
Heavy Duty Indoor Construction
Front and Rear Access
Black Powder-Coat, Standard
Flexible and Scalable
Quick Shipping

Weight and Dimensions

Approximate Exterior Enclosure Dimensions:
62”H x 23”W x 25”D
Shipping Dimensions:
42”D x 32”W- Palletized
Approximate Shipping Weight:
135 lbs.

2301 S. HWY 77 Pauls Valley, OK 73075
T: (405)-665-2876
sales@ddbunlimited.com www.ddbunlimited.com

DDB UNLIMITED®
An ISO 9001 Certified company

ST Series

ST-62DXB

Made in America
Believing in American Craftsmanship
15 YEAR WARRANTY



Features

1. 0.100” Aluminum Construction
2. Lockable Slam-Latch
3. Reusable Foam Filters
4. Stainless Stell Door Hinge
5. 19” Adjustable Racking Rails
6. Rear Door Access
7. Powder Coat Black

2301 S. HWY 77 Pauls Valley, OK 73075
T: (405)-665-2876
sales@ddbunlimited.com www.ddbunlimited.com

Scan this code for Climate Control

Scan this code for Accessories

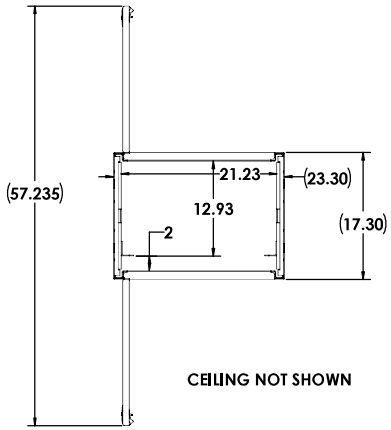

CEILING NOT SHOWN

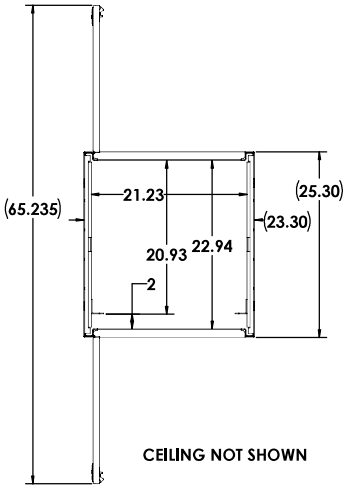

CEILING NOT SHOWN

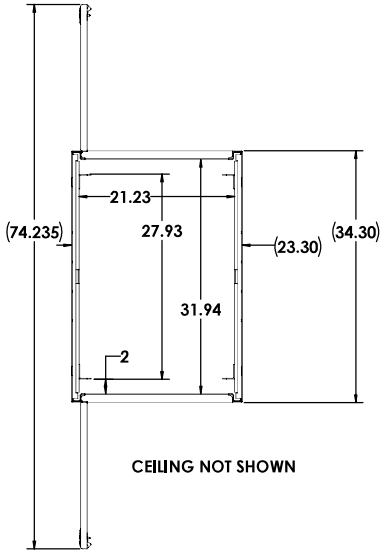

CEILING NOT SHOWN

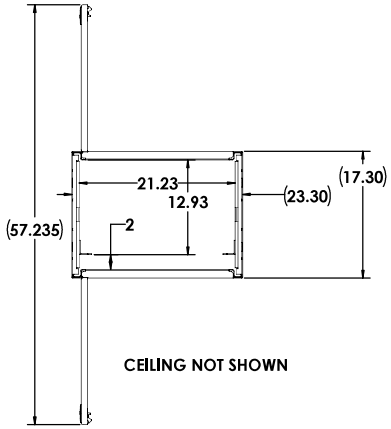

CEILING NOT SHOWN

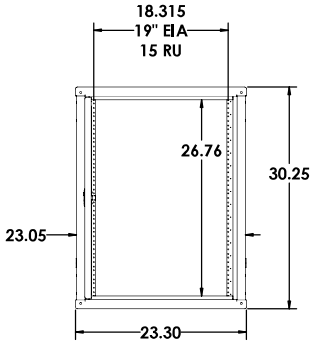

ST-30D

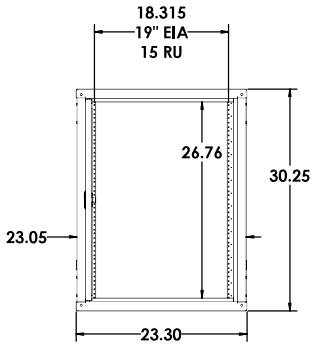

ST-30DX

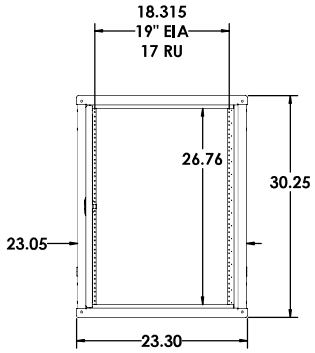

ST-30DD

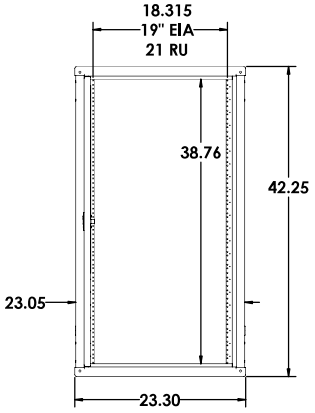

IOD-42D

30D DIAMOND VOGEL, BEIGE GLOSS TEXTURE ET-8320
30DX DIAMOND VOGEL, BEIGE GLOSS TEXTURE ET-8320
30DD DIAMOND VOGEL, BEIGE GLOSS TEXTURE ET-8320
42D DIAMOND VOGEL, BEIGE GLOSS TEXTURE ET-8320
42DX DIAMOND VOGEL, BEIGE GLOSS TEXTURE ET-8320
42DD DIAMOND VOGEL, BEIGE GLOSS TEXTURE ET-8320
62DXB DIAMOND VOGEL, BLACK RIVER TEXTURE ET-9384

UNLESS OTHERWISE SPECIFIED:
DIMENSIONS ARE IN INCHES
ANGULAR: ±1°
FRACTIONAL ±1/32
TWO PLACE DECIMAL ±0.030
THREE PLACE DECIMAL ±0.010
ALL HOLES Ø.005 Ⓜ B Ⓜ
MATERIAL: Material <not specified>
FINISH:
DO NOT SCALE DRAWING

DDB Unlimited Inc.
30D

SIZE	Cage Code:	DWG. NO.:	REV
D	3S5Y5	00070	E
SCALE: 1:8	WEIGHT: 49 lbs.	SHEET 3 OF 4	

09/19/24

UNCLASSIFIED PUBLIC

File Location: (DDB)(EPDM Vault) C:\DDB\DR Requests\Customers\DDB WEB DWG\ST-XXXX\

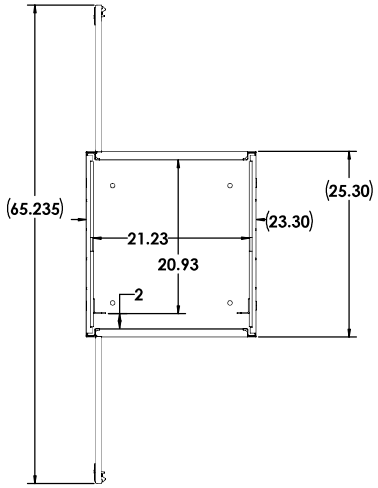

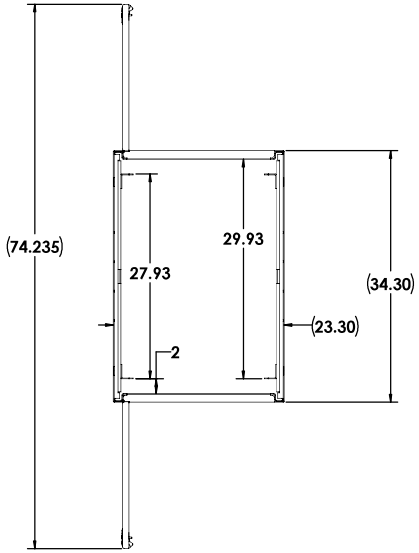

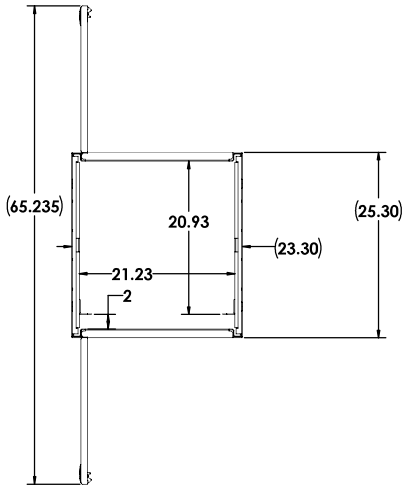

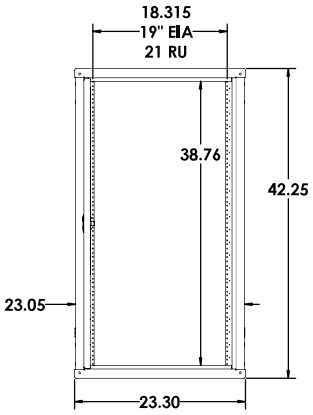

ST-42DX

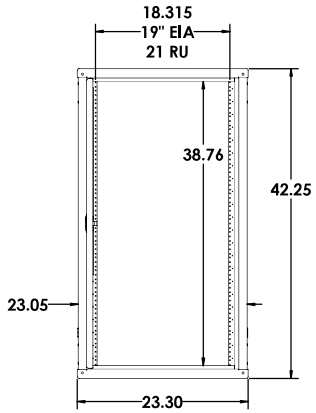

ST-42DD

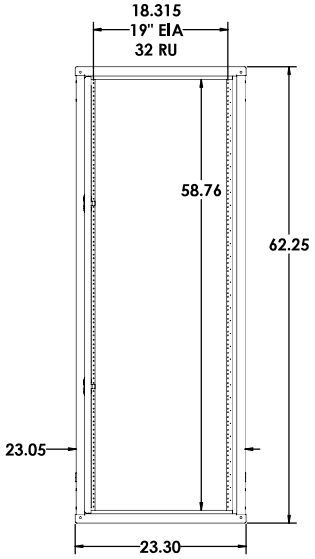

ST-62DXB

UNLESS OTHERWISE SPECIFIED:	DDB Unlimited Inc.			
DIMENSIONS ARE IN INCHES	42DD			
ANGULAR: ±1°	SIZE	Cage Code:	DWG. NO.:	REV
FRACTIONAL ±1/64 DECIMAL: ±0.1250	D	385Y5	00070	E
TWO PLACE DECIMAL: ±0.0500	SCALE: 1:8	WEIGHT: 92 lbs.		SHEET 4 OF 4
THREE PLACE DECIMAL: ±0.0150				
AS PER ASME Y14.5M-1994				
MATERIAL: SS304+#2B+CTD 1100 ASTM B209Mgr16				
PAINT: TEXMARK POWDER, WHITE GLOSS TEXTURE TM5329				
DO NOT SCALE DRAWING				

09/19/24

PROPRIETARY AND CONFIDENTIAL
THE INFORMATION CONTAINED IN THIS DRAWING IS THE SOLE PROPERTY OF DDB Unlimited, INC. ANY REPRODUCTION IN PART OR AS A WHOLE WITHOUT THE WRITTEN PERMISSION OF DDB Unlimited, INC. IS PROHIBITED.

File Location: (DDB)(EPDM Vault) C:\DDB\DR Requests\Customers\DDB WEB DWG\ST-XXXX\

SY-32DXL

32" H x 23" W x 25" D (18 RU) Indoor Enclosure

Click Here For More Information Online





General

Weight
- 90 Lbs. assembled
- 145 Lbs. shipping weight

Doors
- Front door has framed see thru .25 ” Lexan
- Rear door is Alumiflex™ construction, both doors have lift off hinges
- 5 ” plenum below rear door has removable access plates for cable entries

Handles
- 2 - 5" spring loaded handles one on each side of cabinet.

Racking Specifications

Rails
- Two sets standard (for additional rails see accessories)
- Alodine coated
- Holes tapped for 10-32 threads
- Each rail supported by two R-STRUTS™
- .125" Material (Alumiflex™)

Spacing
- 19" EIA standard

Useable Depth
- Maximum: 21.5"
- Minimum: 19.75"

Ratings

NEMA Class Types available
- Class 250 Type 2

Paint Tested
- 1000 Hour salt spray
- 1000 Hour immersion

Inside Clearance - Less Rails
- Height: 32"
- Width: 23"
- Depth: 25

Exterior Cabinet Dimensions

Main Body
- Height: 32.25"
- Width: 23.25"
- Depth: 25.25"

Screws
- Protrude .1875" on each side

Total Space Occupied
- Height: 32.25"
- Width: 23.625"
- Depth: 25.375"

Comes standard with:
- 2 - Perforated Mounting Shelf's
- 110V Fan Kit w/ Thermostat

SY-42DXL

42" H x 23" W x 25" D (23 RU) Indoor Enclosure

Click Here For More Information Online





General

Weight
- 100 Lbs. assembled
- 150 Lbs. shipping weight

Doors
- Front door has framed see thru .25" Lexan
- Rear door is Alumiflex™ construction, both doors have lift off hinges
- 5 " plenum below rear door has removable access plates for cable entries

Handles
- 2 - 5" spring loaded handles one on each side of cabinet.

Racking Specifications

Rails
- Two Sets standard (for additional rails see accessories)
- Alodine coated
- Holes tapped for 10-32 threads
- Each rail supported by two R-STRUTS™
- .125" Material (Alumiflex™)

Spacing
- 19" EIA standard

Useable Depth
- Maximum: 21.5"
- Minimum: 19.75"

Comes standard with:
- 2 - Perforated Mounting Shelf's
- 110V Fan Kit w/ Thermostat

Ratings

NEMA Class Types available
- Class 250 Type 2

Paint Tested
- 1000 Hour salt spray
- 1000 Hour immersion

Inside Clearance - Less Rails
- Height: 42"
- Width: 23"
- Depth: 25

Door Opening Clearance

Height
- 38.75"

Width
- 19.5"

Exterior Cabinet Dimensions

Main Body
- Height: 42.25"
- Width: 23.625"
- Depth: 25.625"

Screws
- Protrude .1875" on each side

	*Section Starting & Ending Points	Vertical Height Per section	Effective Depth For Each Section
Top	40.32" – 42.00"	1.68"	22 15/16"
	25.00" – 40.32"	15.32"	24 11/16"
Center	17.00" – 25.00"	8.00"	24 3/16"
	1.68" – 17.00"	15.32"	24 11/16"
Bottom	0.00" – 1.68"	1.68"	22 15/16"

An ISO 9001 Certified company

SY Series

SY-50DXL

Made in America

Believing in American Craftsmanship

15 YEAR WARRANTY

Why Choose SY the Series?

The SY series of enclosures are the ultimate choice for your indoor racking requirements. Being made of our own rugged Alumiflex®, you'll find it noticeably lighter than steel, yet strong enough to rack even the heaviest equipment. When choosing the SY series, you have handpicked the highest value in American construction. The SY-50DXL includes the standard features you have come to expect with DDB, incorporating the versatile strut system for adjustable racking, and the security of a slam-latch, locking system. For those who need more than just our standard enclosure, DDB can also make a truly customized solution with our many available options, providing a climate-controlled environment for any electronic equipment, electrical load panels and cable entry solutions to name a few. All of this comes together to create an enclosure able to meet all of the unique needs your customers have been seeking. DDB offers a state-of-the-art design, a competitive price, benchmark lead times and a guaranteed delivery, all backed up with an industry leading 15-year warranty on every enclosure. Put DDB's substantial stock to work for you today. Contact our professional staff to assist you with your made-to-order solution.



Features

0.125" Aluminum Construction

Lift-Off Door Hinge

Slam Latch Door Key Locks

Heavy Duty Out-Door Construction

Front and Rear Access

Custom Colors Available

Cream in Stock

Flexible and Scalable

15 Year Warranty

Quick Shipping

Application Types

Telecommunications
Wireless/Broadband
Fiber Optics
Vertical Mount
Small Cell/DAS
Public Safety
Utility
Switch/Controller Cabinet
Military
Data Center
Wi-Fi
LTEE/4G/5G
Network Rack
Clean Rooms
Networking Rack
Industrial/Manufacturing
Communications Rack



Industry Standards:

NEMA Type 2 as shown

Weight and Dimensions

Approximate Exterior Enclosure Dimensions:

51”H x 24”W x 26”D

Shipping Dimensions:

32”D x 42”L - Palletized

Approximate Shipping Weight:

133lbs.

2301 S. HWY 77 Pauls Valley, OK 73075
T: (800) 753-8459 – F: (877) 220-7236
sales@ddbunlimited.com www.ddbunlimited.com

DDB UNLIMITED®

An ISO 9001 Certified company

SY Series

SY-50DXL

Made in America

Believing in American Craftsmanship

15 YEAR WARRANTY



Features

1. 2, Perforated, 4-Post, Mounting Trays
2. Front and Rear 19” Adjustable Racking Rails
3. Rear Access Door
4. Lift-Off hinges and front door
5. Slam Latch Door Key Locks
6. Powder coat cream
7. Reusable Vent Filters
8. Clear, Lexan Window on Front Door
9. Leveling Feet
10. 2, Swing Handles

2301 S. HWY 77 Pauls Valley, OK 73075

T: (800) 753-8459 – F: (877) 220-7236

sales@ddbunlimited.com www.ddbunlimited.com

PRELIMINARY

PRELIMINARY

REVISIONS		
REV.	DESCRIPTION	DATE

WEB DRAWING (NOT FOR FABRICATION)

For Fabrication Drawing of this enclosure see DWG #:

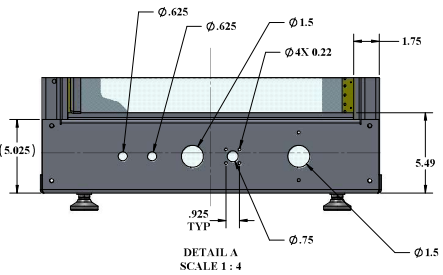

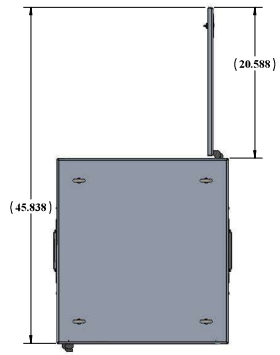

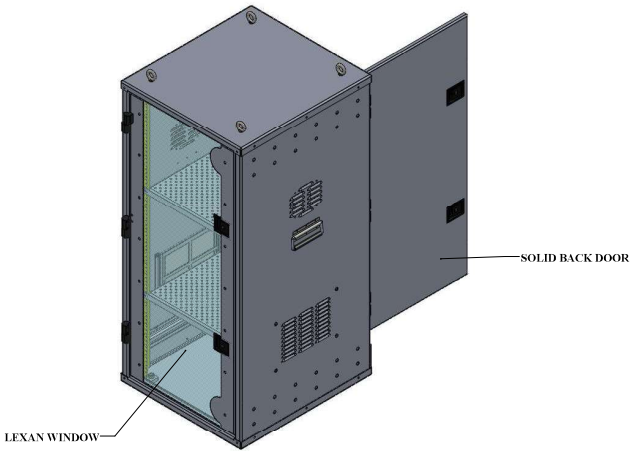

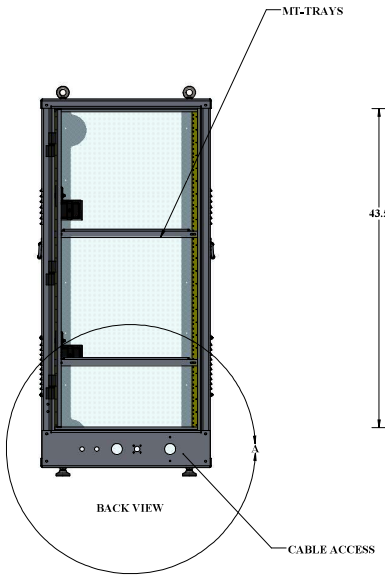

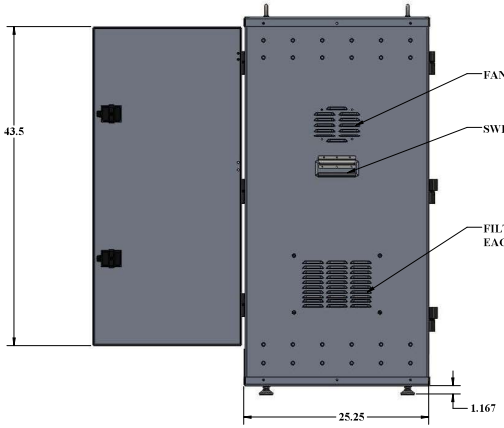

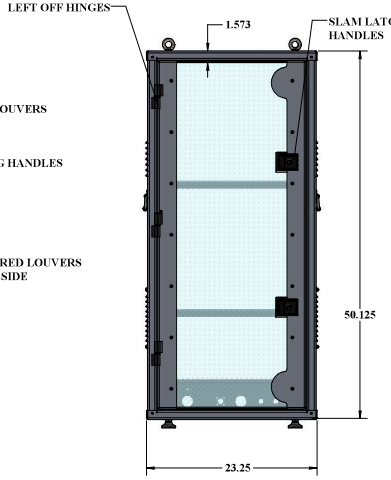

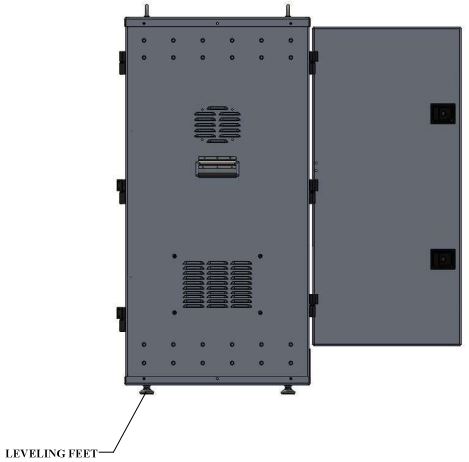

WEB DRAWING (NOT FOR FABRICATION)

UNLESS OTHERWISE SPECIFIED:		NAME	DATE
DIMENSIONS ARE IN INCHES	Model by:		
ANGULAR: MACH ±1° BEND ±1° TWO PLACE DECIMAL ±.010 THREE PLACE DECIMAL ±.005	Drawn by:	Marvin8	
ALL EDGES TO BE BREAK MATERIAL THICKNESS 0.125"	Sales Rep.:		
MATERIAL: 5052-H32	Q.A. Appr.:		
PAINT: SEE P.O.	Prod.Mgr.:		
DO NOT SCALE DRAWING	Control Number:		

ISO 9001 REGISTERED COMPANY
Certificate NO. 7252

DDB Unlimited Inc.

SY-XXDXL

Main Enclosure Root Folder

SIZE	Cage Code:	DWG. NO.:	REV
D	3S5Y5		~
SCALE: 1:8	WEIGHT: 100 lbs.		SHEET 1 OF 1

PROPRIETARY AND CONFIDENTIAL
THE INFORMATION CONTAINED IN THIS DRAWING IS THE SOLE PROPERTY OF DDB Unlimited, INC. ANY
REPRODUCTION IN PART OR AS A WHOLE WITHOUT THE WRITTEN PERMISSION OF DDB Unlimited, INC. IS PROHIBITED.

DDB FORM: 7.1-2 REV.E 04/25/13

PRELIMINARY

PRELIMINARY

File Location: [DDB]\EPDM Vault\
C:\DDB\Drawing Requests\Customers\DDB STND ENC\SY Family\

SY-72DXL

72" H x 23" W x 25" D (40 RU) Indoor Enclosure

Click Here For More Information Online





General

Weight
- 140 Lbs. assembled
- 185 Lbs. shipping weight

Doors
- Front door has framed see thru .25" Lexan
- Rear door is Alumiflex™ construction, both doors have lift off hinges
- 5 " plenum below rear door has removable access plates for cable entries

Handles
- 2 - 5" spring loaded handles one on each side of cabinet.

Racking Specifications

Rails
- Two Sets standard (for additional rails see accessories)
- Alodine coated
- Holes tapped for 10-32 threads
- Each rail supported by two R-STRUTS™
- .125" Material (Alumiflex™)

Spacing
- 19" EIA standard

Useable Depth
- Maximum: 21.5"
- Minimum: 19.75"

Comes standard with:
- 2 - Perforated Mounting Shelf's
- 110V Fan Kit w/ Thermostat

Ratings

NEMA Class Types available
- Class 250 Type 2

Paint Tested
- 1000 Hour salt spray
- 1000 Hour immersion"

Exterior Cabinet Dimensions

Main Body
- Width: 23"
- Height: 72"
- Depth: 25"