DDB UNLIMITED®

An ISO 9001/27001 Certified company

UL50 SBS Series

SBS-262210C-UL

Made in America

Believing in American Craftsmanship

15 YEAR WARRANTY

Why Choose SBS the Series?

The UL50 SBS series, outdoor enclosure, is the ultimate choice for your indoor/outdoor requirements. Being made of our own rugged Alumiflex®, you'll find it noticeably lighter than steel, yet strong enough to support even the heaviest equipment. When choosing the UL50 SBS series, you are selecting the highest value in American construction. The UL50 SBS enclosure, is optimal for public safety applications when UL Type 4 requirements are needed. It is ideal for both indoor and outdoor applications. Due to the flexible platform, the UL50 SBS can be utilized as an electrical panel, battery storage, or communication cabinet as well as other numerous applications. The UL50 SBS series includes standard features you have come to expect, including a standard back plate, key locks, and various mounting bracket types. Additional optional accessories that can be added to enhance functionality include HVAC and cable entry solutions. DDB offers, a state-of-the-art design, a competitive price, and a guaranteed delivery with benchmark lead times. Contact our professional staff to assist with your design today.

Application Types

Telecommunications
Wireless/Broadband
Fiber Optics
Small Cell/DAS
Public Safety
Utility
Military
Trailer-Based Communications
Wi-Fi
Video/Monitoring
Oil/Gas
Control Panels

Industry Standards:

UL 508A, Industrial Control Panels,
UL 50 Type 4 (Listed)

c UL us LISTED

Features

.125" Aluminum Construction
Stainless Steel External Hardware/Hinge
Key-Lock Compression Turn Latches
Beige Powder Coat
Custom Colors Available
Flexible and Scalable
15 Year Warranty
Quick Shipping

Weight and Dimensions

Approximate Exterior Enclosure Dimensions:
26"H x 22"W x 10.5"D
Shipping Dimensions:
28"L x 24"D x 12"H - Boxed
Approximate Shipping Weight:
39 lbs - Boxed

2301 S. HWY 77 Pauls Valley, OK 73075
T: (800) 753-8459 – F: (877) 220-7236
sales@ddbunlimited.com www.ddbunlimited.com

DDB UNLIMITED®

An ISO 9001 Certified company

UL50 SBS Series

SBS-262210C-UL50

Made in America

Believing in American Craftsmanship

15 YEAR WARRANTY

Features

1. Compression Key Lock Latch – UL Listed
2. Standard Plywood Backplate on standoffs
3. Bonding Strap – UL Listed
4. Frame Gasket with vulcanized corners – UL Listed
5. Powder-Coat Cream

c UL us LISTED

2301 S. HWY 77 Pauls Valley, OK 73075
T: (800) 753-8459 – F: (877) 220-7236
sales@ddbunlimited.com www.ddbunlimited.com

WEB DRAWING (NOT FOR FABRICATION)

REVISIONS		
REV.	DESCRIPTION	DATE
A	SBS WEB DRAWING CREATED PER DR-2305	5/8/2020
F	UPDATED TO REV F. DRAWINGS WERE NEVER UPDATED TO REV B, C, D, E NO DRAWING REQUESTS WERE EVER ISSUED.	5/9/2022

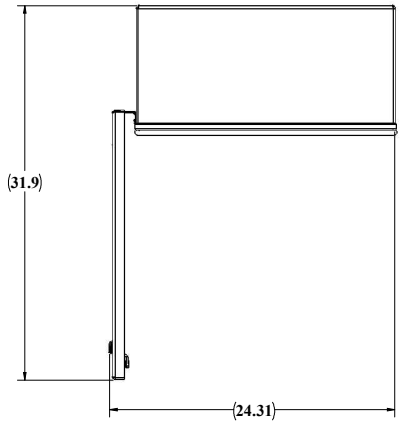

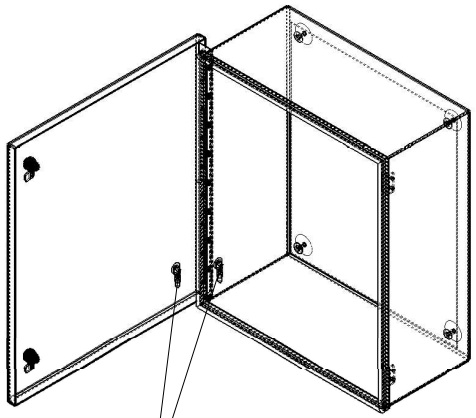

GROUNDING LUGS WITH PAINT FREE AREA

QUARTER TURN LOCKING

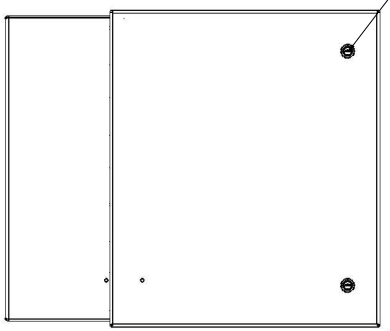

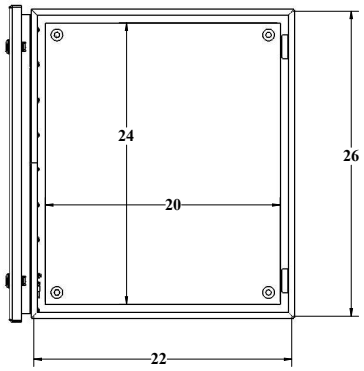

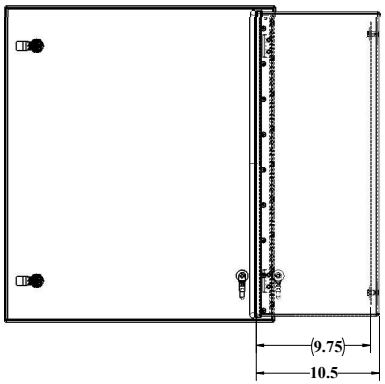

WEB DRAWING (NOT FOR FABRICATION)

UNLESS OTHERWISE SPECIFIED:		NAME	DATE
DIMENSIONS ARE IN INCHES	Model by:	DDB	05/08/2020
ANGULAR: ±1°	Drawn by:	MarvinS	05/09/22
FRACTIONAL/NO DECIMAL: ±1/16	Sales.Rep:	Jason Campbell	
TWO PLACE DECIMAL: ±.02	Q.A. Appr.:	troy	05/10/22
THREE PLACE DECIMAL: ±.010	Prod.Mgr.:	ClarkK	05/10/22
ALL HOLES ø±.005			
MATERIAL THICKNESS: ±.125"			
MATERIAL: 5052-H32-0.125" ASTM-B209-04			
PAINT: DIAMOND VOGEL, IRIDE GLOSS TEXTURE 074-0010			
DO NOT SCALE DRAWING	Control Number:		

DDB Unlimited Inc.
SB-XXXXX-UL50
SBS-262210 (Non UL)

SIZE	Cage Code:	DWG. NO.:	REV.
D	385Y5	02305	F

SCALE: 1:8 | WEIGHT: 33.67 lbs. | SHEET 1 OF 2

DDB FORM 7.1-2 REV.F 05/02/19

UNCLASSIFIED - PUBLIC

File Location: (DDB) (EPDM Vault:)
C:\DDB\Drawing Requests\Customers\DDB WEB DWG\SBS-Family\SBS-262210\

WEB DRAWING (NOT FOR FABRICATION)

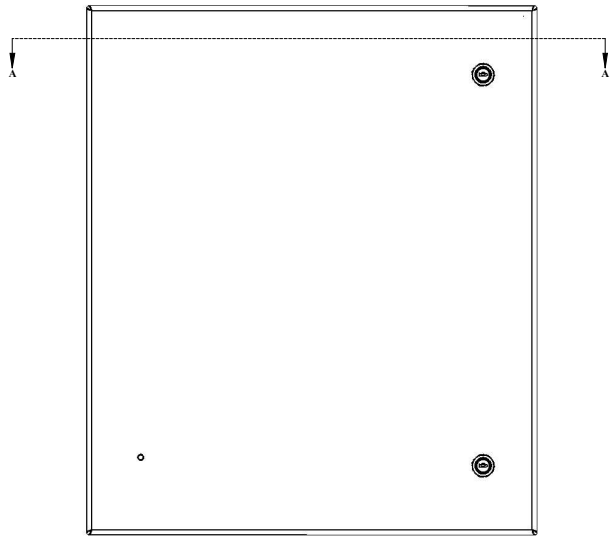

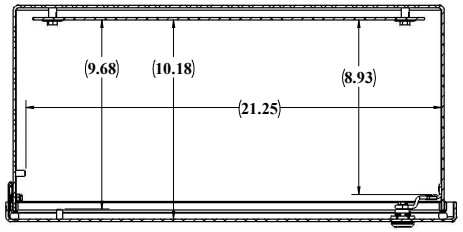

SECTION A-A
SCALE 1 : 3

WEB DRAWING (NOT FOR FABRICATION)

UNLESS OTHERWISE SPECIFIED: DIMENSIONS ARE IN INCHES ANGULAR: ±1° FRACTIONAL/NO DECIMAL: ±0.1250 ONE PLACE DECIMAL: ±0.0625 TWO PLACE DECIMAL: ±0.0200 THREE PLACE DECIMAL: ±0.0150 ALL HOLES: ±0.0100	*DDB Unlimited Inc.* SBS-262210 (closed) SBS-262210 (Non UL)		
	SIZE	Cage Code:	DWG. NO.:	REV
	D	385Y5	02305	F
MATERIAL: 5052-H32-0.125" ASTM-B209-04	SCALE: 1:8	WEIGHT: 33.66 lbs.	SHEET 2 OF 2	
PAINT: DIAMOND VOGEL, HIGH GLOSS TEXTURE ET AZIR				
DO NOT SCALE DRAWING				

UNCLASSIFIED PUBLIC
THE INFORMATION CONTAINED IN THIS DRAWING IS THE SOLE PROPERTY OF DDB Unlimited, INC. ANY REPRODUCTION IN PART OR AS A WHOLE WITHOUT THE WRITTEN PERMISSION OF DDB Unlimited, INC. IS PROHIBITED.

File Location: (DDB)(EPDM Vault:)
C:\DDB\Drawing Requests\Customers\DDB WEB DWG\SBS-Family\SBS-262210\

DDB FORM: 7.1-2 REV:K 08/02/17