An ISO 9001 Certified company

WOD Series

WOD-16DDC

Made in America

Believing in American Craftsmanship

Why Choose the WOD Series?

The WOD series of enclosures are the ultimate choice for your outdoor racking requirements. Being made of our own rugged Alumiflex®, you'll find it noticeably lighter than steel, yet strong enough to rack even the heaviest equipment. When choosing the WOD series, you have handpicked the highest value in American construction. The WOD-16DDC includes the standard features you have come to expect with DDB, incorporating the versatile strut system for adjustable racking, the security of a 3-point locking system and our patented Alumishield® solar cap to manage heat loads. For those who need more than just our standard enclosure, DDB can also make a truly customized solution with our many available options including HVAC, providing a climate-controlled environment for any electronic equipment, electrical load panels and cable entry solutions to name a few. All of this comes together to create an enclosure able to meet all of the unique needs your customers have been seeking. DDB offers a state-of-the-art design, a competitive price, benchmark lead times and a guaranteed delivery, all backed up with an industry leading 15-year warranty on every enclosure. Put DDB's substantial stock to work for you today. Contact our professional staff to assist you with your made-to-order solution.

Features

15 Year Warranty

0.125" Aluminum Construction

3 Point Lock System

Heavy Duty Out-Door Construction

Front and Rear Access

Standard Lifting Hooks

Stainless Steel External Hardware/Hinge

Cream Powder-Coat, Standard

Quick Shipping

Application Types

Telecommunications
Wireless/Broadband
Fiber Optics
Back Haul
Base Station
Small Cell/DAS
Utility
Military
Trailer-Based Communications
Wi-Fi
Flexible and Scalable

Environmental & Safety Ratings:

- ✓ NEMA 3R, 4 or 4X
- ✓ ETL Certified to UL standard 60950-1/CSA 22.2C

Weight and Dimensions

Approximate Exterior Enclosure Dimensions:

18"H x 33"W x 39D

Shipping Dimensions:

42" D x 42" W- Palletized Approximate

Shipping Weight:

133 lbs.

2301 S. HWY 77 Pauls Valley, OK 73075
T: (405)-665-2876
sales@ddbunlimited.com www.ddbunlimited.com

An ISO 9001 Certified company

WOD Series

WOD-16DDC

Made in America

Believing in American Craftsmanship

Features

1. Alumishield
2. Wind Locks
3. 19” and 23” Adjustable Racking Rails
4. Stainless Steel Door Hinge
5. Reusable Vent Filters
6. 3 Point Locking System
7. Heavy Duty 0.160" Doors
8. Powder-Coat Cream
9. Rear Door Access

2301 S. HWY 77 Pauls Valley, OK 73075
T: (405)-665-2876
sales@ddbunlimited.com www.ddbunlimited.com

Scan this code for Climate Control

Scan this code for Accessories

REVISIONS		
REV.	DESCRIPTION	DATE
A	Initial Web Drawing per DR-00134	6/10/2013
B	Revise to incorporate new components and new drawing template pdr DR-00905	5/13/2014
C	UPDATED DRAWING PER DR-01938	4/10/2019
D	UPDATED DRAWING WITH DOOR RODS WITH ROLLERS PER DR-02266	4/21/2020

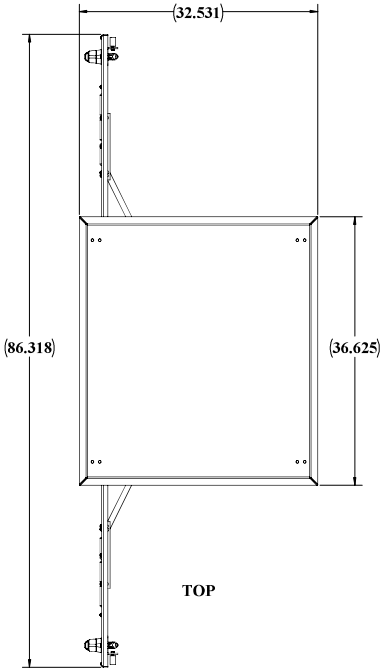

TOP

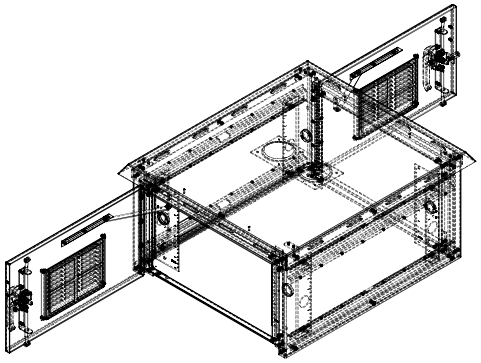

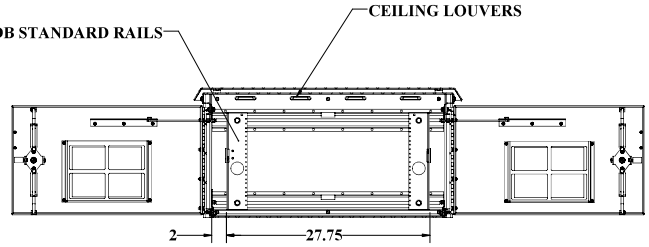

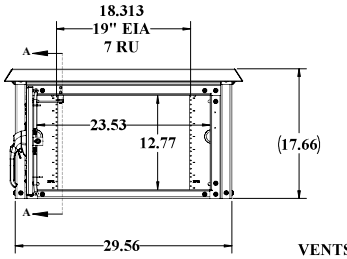

FRONT

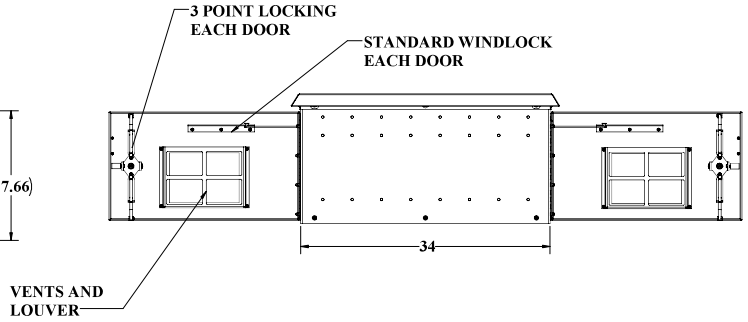

RIGHT SIDE

UNLESS OTHERWISE SPECIFIED:	DDB Unlimited Inc.			
DIMENSIONS ARE IN INCHES TOLERANCES: ANGULAR: ±1° FRACTIONAL: NO DECIMAL: ±0.1250 TWO PLACE DECIMAL: ±0.0500 THREE PLACE DECIMAL: ±0.0250 FOUR PLACE DECIMAL: ±0.0150 ALL HOLES ±0.0150	WOD-16DD WOD, 16"H, DDWOD-16DD			
	SIZE	Cage Code:	DWG. NO.:	REV
MATERIAL: 5052-H32-0.125 ASTM B209-04	D	385Y5	00264	D
PAINT: DIAMOND VOGEL, BRIDGE GLOSS TEXTURE ET4-9320	SCALE: 1:8	WEIGHT: 99 lbs.	SHEET 1 OF 3	
DO NOT SCALE DRAWING				

DDB FORM: 7.1-2 REV: K 08/02/17

UNCLASSIFIED PUBLIC

File Location: (DDB)(EPDM Vault:)
C:\DDB\DR Requests\Customers\DDB WEB DWG\WOD Family WEB\DR-00264 (WOD-16DD

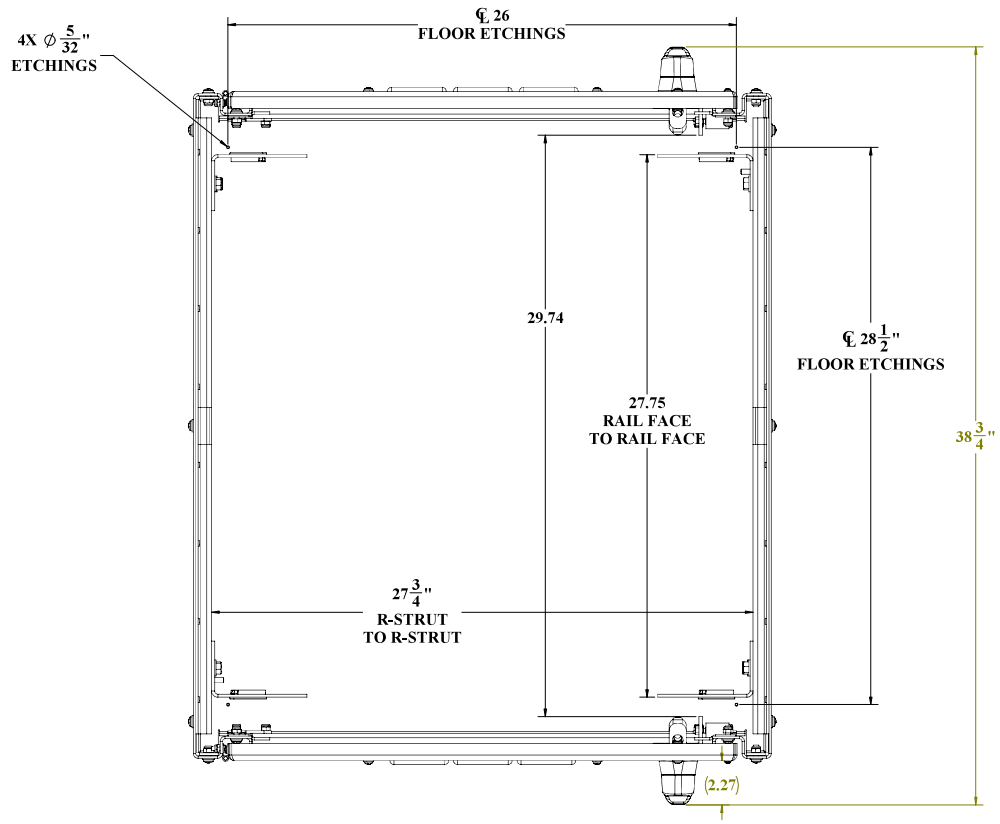

TOP VIEW
CEILING AND ALUMASHIELD NOT SHOWN

UNLESS OTHERWISE SPECIFIED: DIMENSIONS ARE IN INCHES ANGULAR: ±1° FRACTIONAL/NO DECIMAL: ±0.1250 ONE PLACE DECIMAL: ±0.0500 TWO PLACE DECIMAL: ±0.0250 THREE PLACE DECIMAL: ±0.0150 ALL HOLES ±0.0100	DDB Unlimited Inc. DD Closed Enclosure, Family, WODDD Closed		
	SIZE	Cage Code:	DWG. NO.:	REV
MATERIAL: 5052-H32-0.125 ASTM B209-04	D	385Y5	00264	D
PAINT: DIAMOND VOGEL, BRIDGE GLOSS TEXTURE ET-0320	SCALE: 1:8	WEIGHT: 131 lbs.	SHEET 2 OF 3	
DO NOT SCALE DRAWING				

DDB FORM: 7.1-2 REV:K 08/02/17

UNCLASSIFIED PUBLIC

File Location: (DDB)(EPDM Vault:)
C:\DDB\DR Requests\Customers\DDB WEB DWG\WOD Family WEB\DR-00264 (WOD-16DD

WEB DRAWING (NOT FOR FABRICATION)

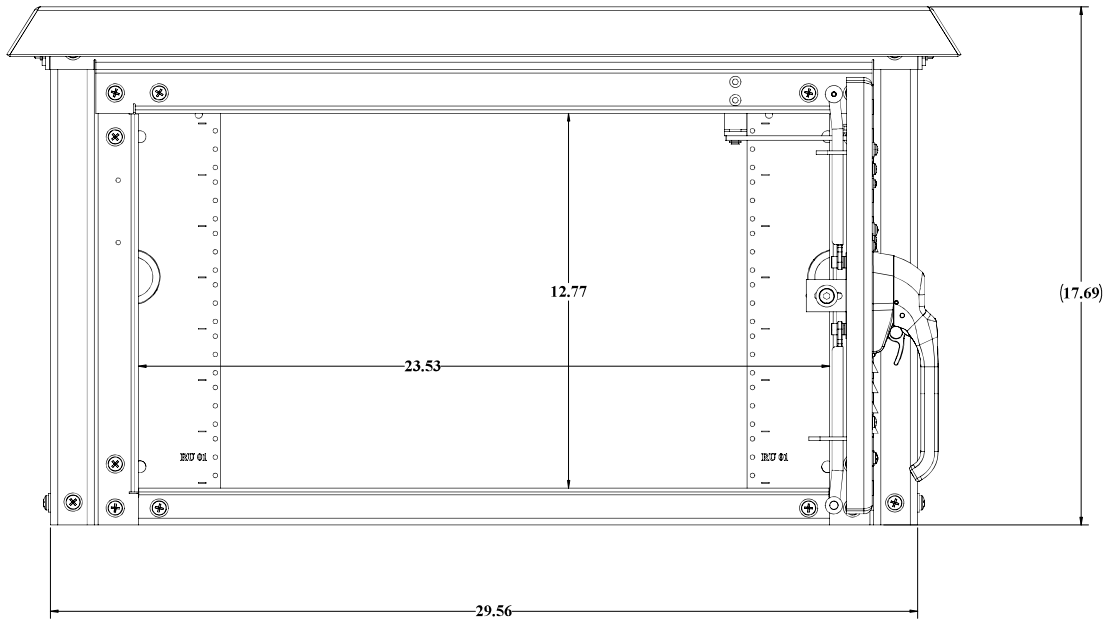

BACK VIEW
GASKET NOT SHOWN

WEB DRAWING (NOT FOR FABRICATION)

UNLESS OTHERWISE SPECIFIED:
DIMENSIONS ARE IN INCHES
ANGULAR: ±1°
FRACTIONAL/NO DECIMAL: ±0.1000
ONE PLACE DECIMAL: ±0.0625
TWO PLACE DECIMAL: ±0.0200
THREE PLACE DECIMAL: ±0.0100
ALL HOLES ±0.0100
MATERIAL: 7052-0153-0.125 ASTM B209-04
PAINT: DIAMOND VOGEL, BRIGE GLOSS TEXTURE ET-0320
DO NOT SCALE DRAWING

DDB Unlimited Inc.
WOD-16DD
WOD, 16"H, DDWOD-16DD

SIZE	Cage Code:	DWG. NO.:	REV
D	385Y5	00264	D
SCALE: 1:8	WEIGHT: 99 lbs.	SHEET 3 OF 3	

UNCLASSIFIED PUBLIC

File Location: (DDB)(EPDM Vault:)
C:\DDB\DR Requests\Customers\DDB WEB DWG\WOD Family WEB\DR-00264 (WOD-16DD

DDB FORM: 7.1-2 REV:K 08/02/17